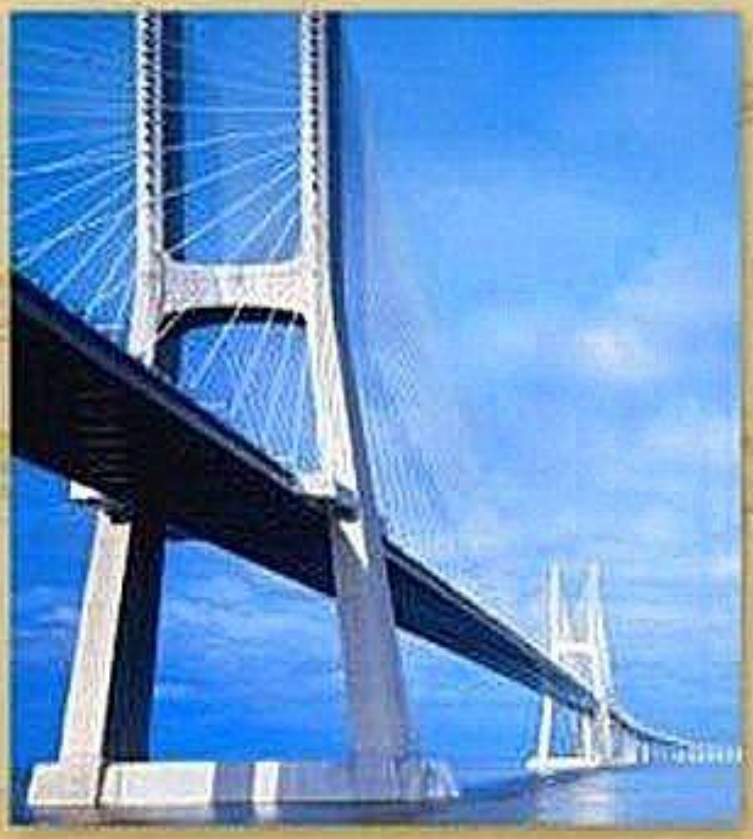

STRUCTURAL ANALYSIS

SEVENTH EDITION

R. C. HIBBELER

www.e-kitabi.com

c01.qxd 6/24/08 1:58 PM Page 1

© 2009 by R.C. Hibbeler. Published by Pearson Prentice Hall, Pearson Education, Inc., Upper Saddle River, NJ. All rights reserved. This material is protected under all copyright laws as they currently exist. No portion of this material may be reproduced, in any form or by any means, without permission in writing from the publisher.

1–1. The floor of a light storage warehouse is made of 6-in.-thick cinder concrete. If the floor is a slab having a length of 10 ft and width of 8 ft, determine the resultant force caused by the dead load and that caused by the live load.

From Table 1 – 3,

$DL = (6\text{in.})(9\ \text{lb/ft}^2 \cdot \text{in.})(8\ \text{ft})(10\ \text{ft}) = 4.32\ \text{k}$ **Ans**

From Table 1 – 4,

$LL = (125\ \text{lb/ft}^2)(8\ \text{ft})(10\ \text{ft}) = 10.0\ \text{k}$ **Ans**

1–2. The building wall consists of 8-in. clay brick. In the interior, the wall is made from 2×4 wood studs, plastered on one side. If the wall is 10 ft high, determine the load in pounds per foot of length of wall that the wall exerts on the floor.

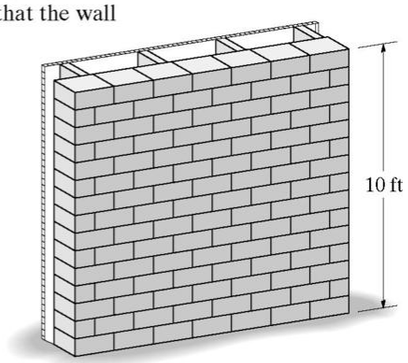

From Table 1 – 3,

$DL = (79\ \text{lb/ft}^2)(10\ \text{ft}) + (12\ \text{lb/ft}^2)(10\ \text{ft}) = 910\ \text{lb/ft}$ **Ans**

1–3. The second floor of a light manufacturing building is constructed from a 4-in.-thick stone concrete slab with an added 3-in. cinder concrete fill as shown. If the suspended ceiling of the first floor consists of metal lath and gypsum plaster, determine the dead load for design in pounds per square foot of floor area.

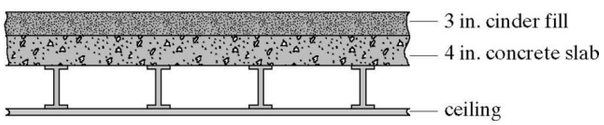

From Table 1 – 3,

4 in. – reinforced – stone slab	$= 4(12)$	$= 48\ \text{lb/ft}^2$
3 in. – cinder concrete	$= 3(9)$	$= 27\ \text{lb/ft}^2$
Plaster and lath		$= 10\ \text{lb/ft}^2$
Total		$p = 85\ \text{lb/ft}^2$ **Ans**

www.e-kitabi.com

c01.qxd 6/24/08 1:58 PM Page 2

© 2009 by R.C. Hibbeler. Published by Pearson Prentice Hall, Pearson Education, Inc., Upper Saddle River, NJ. All rights reserved. This material is protected under all copyright laws as they currently exist. No portion of this material may be reproduced, in any form or by any means, without permission in writing from the publisher.

***1–4.** The hollow core panel is made from plain stone concrete. Determine the dead weight of the panel. The holes each have a diameter of 4 in.

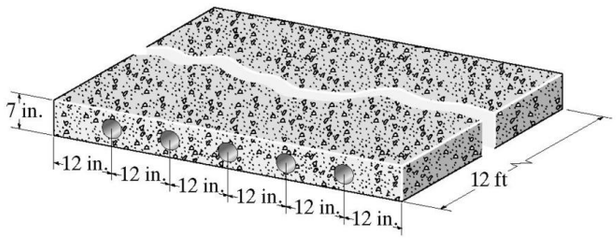

$$W = (144\ \text{lb/ft}^3)[(12\ \text{ft})(6\ \text{ft})(\tfrac{7}{12}\ \text{ft}) - 5(12\ \text{ft})(\pi)(\tfrac{2}{12}\ \text{ft})^2] = 5.29\ \text{k}$$ **Ans**

1–5. The floor of a classroom is made of 125-mm thick lightweight plain concrete. If the floor is a slab having a length of 8 m and width of 6 m, determine the resultant force caused by the dead load and the live load.

$F_D = 0.015\ \text{kN/m}^2/\text{mm})(125\ \text{mm})(8\text{m})(6\text{m})$
$= 90\ \text{kN}$ **Ans**

$F_L = (1.92\ \text{kN/m}^2)(6\ \text{m})(8\ \text{m})$
$F_L = 92.16\ \text{kN} = 92.2\ \text{kN}$ **Ans**

$F = F_D + F_L = 90\ \text{kN} + 92.16\ \text{kN} = 182.16\ \text{kN} = 182.\text{kN}$ **Ans**

1–6. The pre-cast T-beam has the cross-section shown. Determine its weight per foot of length if it is made from reinforced stone concrete and eight $\frac{3}{4}$-in. cold-formed steel reinforcing rods.

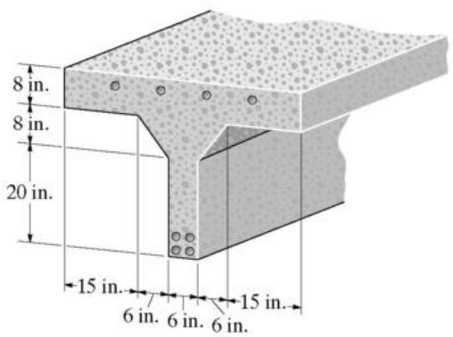

$$A = (28\ \text{in.})(6\ \text{in.}) + (8\ \text{in.})(48\ \text{in.}) + 2(\tfrac{1}{2})(6\ \text{in.})(8\ \text{in.}) = 600\ \text{in}^2 = 4.167\ \text{ft}^2$$

$$A_{steel} = 8(\frac{\pi(0.75\ \text{in.})^2}{4}) = 3.534\ \text{in}^2 = 0.02454\ \text{ft}^2$$

$$A_{conc} = 4.167\ \text{ft}^2 - 0.02454\ \text{ft}^2 = 4.142\ \text{ft}^2$$

$$W_c = 4.142\ \text{ft}^2(150\ \text{lb/ft}^3) + 0.02454\ \text{ft}^2(492\ \text{lb/ft}^3) = 633\ \text{lb/ft}$$ **Ans**

www.e-kitabi.com

c01.qxd 6/24/08 1:58 PM Page 3

© 2009 by R.C. Hibbeler. Published by Pearson Prentice Hall, Pearson Education, Inc., Upper Saddle River, NJ. All rights reserved. This material is protected under all copyright laws as they currently exist. No portion of this material may be reproduced, in any form or by any means, without permission in writing from the publisher.

1–7. The second floor of a light manufacturing building is constructed from a 5-in.-thick stone concrete slab with an added 4-in. cinder concrete fill as shown. If the suspended ceiling of the first floor consists of metal lath and gypsum plaster, determine the dead load for design in pounds per square foot of floor area.

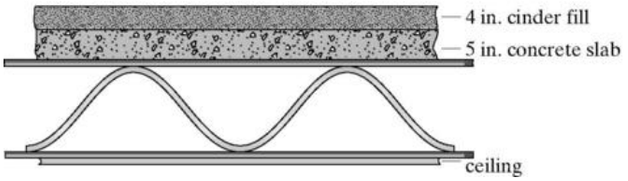

From Table 1 – 3,

5 – in. concrete slab = (12)(5) = 60
4 – in. cinder fill = (9)(4) = 36.0
metal lath & plaster = 10.0
Total dead load = 106 lb / ft^2 **Ans**

***1–8.** The T-beam used in a heavy storage warehouse is made of concrete having a specific weight of 125 lb/ft^3. Determine the dead load per foot length of beam, and the load on the top of the beam per foot length of beam. Neglect the weight of the steel reinforcement.

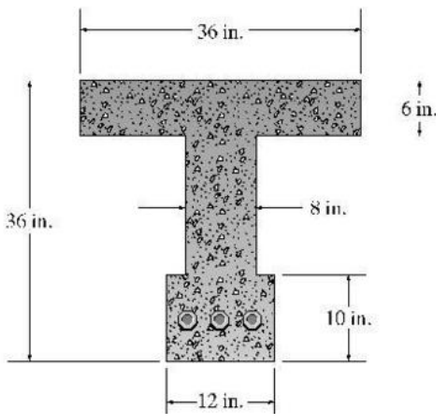

$A = 36(6) + 8(20) + 12(10) = 496$ in^2

$DL = (496\text{ in}^2)(1\text{ ft}^2/144\text{ in}^2)(125\text{ lb/ft}^3) = 431$ lb/ft **Ans**

From Table 1-4,

$LL = (250\text{ lb/ft}^2)\left(\frac{36\text{ in.}}{12\text{ in./ft}}\right) = 750$ lb/ft **Ans**

1–9. The beam supports the roof made from asphalt shingles and wood sheathing boards. If the boards have a thickness of $1\frac{1}{2}$ in. and a specific weight of 50 lb/ft^3, and the roof's angle of slope is 30°, determine the dead load of the roofing—per square foot—that is supported in the x and y directions by the purlins.

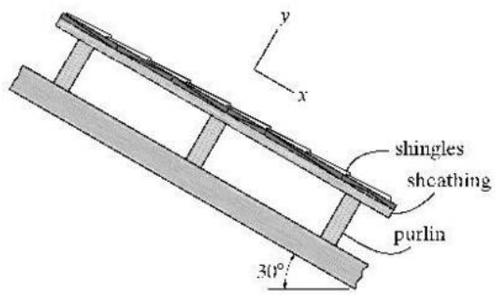

Weight per square foot = $(50\text{ lb/ft}^3)\left(\frac{1.5\text{ in.}}{12\text{ in./ft}}\right) = 6.25$ lb/ft^2

From Table 1-3

Shingles = 2 lb/ft^2

Total $p = 8.25$ lb/ft^2

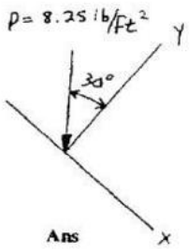

$p_x = (8.25)\sin 30^0 = 4.12$ psf **Ans**

$p_y = (8.25)\cos 30^0 = 7.14$ psf **Ans**

www.e-kitabi.com

c01.qxd 6/24/08 1:58 PM Page 4

© 2009 by R.C. Hibbeler. Published by Pearson Prentice Hall, Pearson Education, Inc., Upper Saddle River, NJ. All rights reserved. This material is protected under all copyright laws as they currently exist. No portion of this material may be reproduced, in any form or by any means, without permission in writing from the publisher.

1–10. A two-story school has interior columns that are spaced 15 ft apart in two perpendicular directions. If the loading on the flat roof is estimated to be 20 lb/ft^2, determine the reduced live load supported by a typical interior column at (a) the ground-floor level, and (b) the second-floor level.

Tributary area $A_t = (15)(15) = 225\ \text{ft}^2$

$F_R = 20(225) = 4.50\ \text{k}$

Since $K_{LL}A_T = 4(225) > 400$

Live load for second floor can be reduced.

$$L = L_0\left(0.25 + \frac{15}{\sqrt{K_{LL}A_t}}\right)$$

$$L = 40\left(0.25 + \frac{15}{\sqrt{(4)(225)}}\right) = 30\ \text{psf}$$

(a) For ground floor column:

$L = 30 > 0.5L_0 = 20$

$F_F = 30(225) = 6.75\ \text{k}$

$F_g = F_F + F_R = 6.75 + 4.50 = 11.25\ \text{k}$ **Ans**

(b) For second floor column:

$F = F_R = 4.50\ \text{k}$ **Ans**

1–11. A four-story office building has interior columns spaced 30 ft apart in two perpendicular directions. If the flat-roof loading is estimated to be 30 lb/ft^2, determine the reduced live load supported by a typical interior column located at ground level.

Floor load:

$L_0 = 50\ \text{psf}$

$A_t = (30)(30) = 900\ \text{ft}^2$

$$L = L_0\left(0.25 + \frac{15}{\sqrt{K_{LL}A_t}}\right)$$

$$= 50\left(0.25 + \frac{15}{\sqrt{4(900)}}\right) = 25\ \text{psf}$$

$$\%\ \text{reduction} = \frac{25}{50} = 50\% > 40\% \quad \textbf{(OK)}$$

$F_g = 3[(25\ \text{psf})(30\ \text{ft})(30\ \text{ft})] + 30\ \text{psf}(30\ \text{ft})(30\ \text{ft}) = 94.5\ \text{k}$ **Ans**

***1–12.** A three-story hotel has interior columns that are spaced 20 ft apart in two perpendicular directions. If the loading on the flat roof is estimated to be 30 lb/ft^2, determine the live load supported by a typical interior column at (a) the ground-floor level, and (b) the second-floor level.

$A_t = (20)(20) = 400\ \text{ft}^2$

$L_0 = 40\ \text{psf}$

$$L = L_0\left(0.25 + \frac{15}{\sqrt{K_{LL}A_t}}\right)$$

$$= 40\left(0.25 + \frac{15}{\sqrt{4(400)}}\right) = 25\ \text{psf}$$

(a) $F_g = 2[(400\ \text{ft}^2)(25\ \text{psf})] + (400\ \text{ft}^2)(30\ \text{psf}) = 32.0\ \text{k}$ **Ans**

(b) $F_{2F} = (400\ \text{ft}^2)(25\ \text{psf}) + (400\ \text{ft}^2)(30\ \text{psf}) = 22.0\ \text{k}$ **Ans**

www.e-kitabi.com

c01.qxd 6/24/08 1:58 PM Page 5

© 2009 by R.C. Hibbeler. Published by Pearson Prentice Hall, Pearson Education, Inc., Upper Saddle River, NJ. All rights reserved. This material is protected under all copyright laws as they currently exist. No portion of this material may be reproduced, in any form or by any means, without permission in writing from the publisher.

1–13. Determine the resultant force acting on the face of the truss-supported sign if it is located near Los Angeles, California on open flat terrain. The sign has a width of 6 m and a height of 3 m as indicated. Use an importance factor of $I = 0.87$.

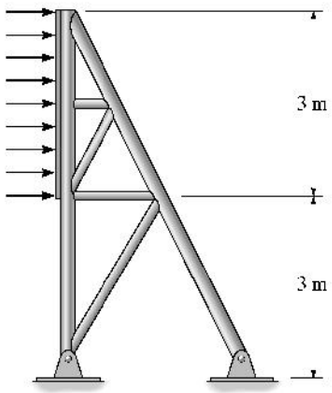

From the wind map $V = 38$ m/s

$K_z = 0.85$

$K_{zt} = 1$

$K_d = 1$

$q_z = 0.613K_zK_{zt}K_dV^2I$

$q_z = 0.613(0.85)(1)(1)(38)^2(0.87) = 654.58\ \text{N/m}^2$

$F = q_zGC_fA_f$

$G = 0.85$

$M/N = 6/3 = 2 < 6, \quad C_f = 1.2$

$A_f = 3(6) = 18\ \text{m}^2$

$F = 654.58(0.85)(1.2)(18) = 12.0\ \text{kN}$ **Ans.**

1–14. The sign is located in Minnesota on open flat terrain. Determine the resultant force of the wind acting on its face. Use an importance factor of $I = 0.87$.

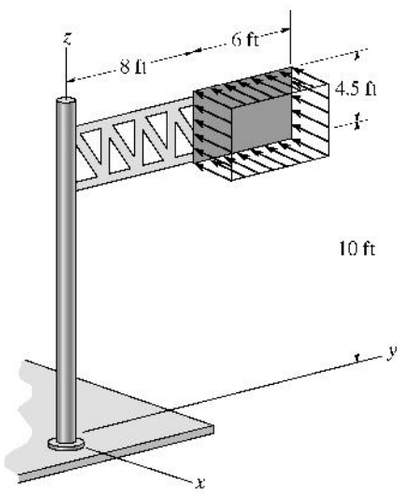

$q_z = 0.00256K_zK_{zt}K_dV^2I$

From wind map $V = 90$ mi/hr

$K_z = 0.85$

$K_{zt} = 1$

$K_d = 1$

$q_z = 0.00256(0.85)(1)(1)(90)^2(0.87) = 15.33\ \text{lb/ft}^2$

$F = q_zGC_fA_f$

$G = 0.85$

$\frac{M}{N} = \frac{6}{4.5} = 1.33 < 6 \qquad C_f = 1.2$

$A_f = 6(4.5) = 27\ \text{ft}^2$

$F = 15.33(0.85)(1.2)(27) = 422\ \text{lb}$ **Ans**

$y = 8 + 3 + 0.2(6) = 12.2\ \text{ft}$ **Ans**

www.e-kitabi.com

c01.qxd 6/24/08 1:58 PM Page 6

© 2009 by R.C. Hibbeler. Published by Pearson Prentice Hall, Pearson Education, Inc., Upper Saddle River, NJ. All rights reserved. This material is protected under all copyright laws as they currently exist. No portion of this material may be reproduced, in any form or by any means, without permission in writing from the publisher.

1–15. Wind blows on the side of the fully enclosed agriculture building located on open flat terrain in Oklahoma. Determine the external pressure acting on the roof. Also, what is the internal pressure in the building which acts on the roof? Use linear interpolation to determine q_h and C_p in Figure 1–13.

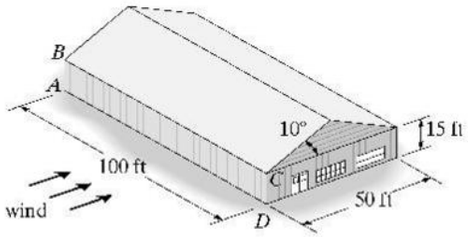

$$q_z = 0.00256 K_z K_{zt} K_d V^2 I$$
$$= 0.00256 K_z (1)(1)(90)^2 (0.87)$$

$$q_{15} = 0.00256(0.85)(1)(1)(90)^2(0.87) = 15.334 \text{ psf}$$

$$q_{20} = 0.00256(0.90)(1)(1)(90)^2(0.87) = 16.236 \text{ psf}$$

$$h = 15 + \frac{1}{2}(25 \tan 10^\circ) = 17.204 \text{ ft}$$

$$\frac{q_h - 15.334}{17.204 - 15} = \frac{16.236 - 15.334}{20 - 15}$$

$$q_h = 15.732 \text{ psf}$$

External pressure on windward side of roof

$$p = q_h G C_p$$

$$\frac{h}{L} = \frac{17.204}{50} = 0.3441$$

$$\frac{[-0.9 - (-0.7)]}{(0.5 - 0.25)} = \frac{(-0.9 - C_p)}{(0.5 - 0.3441)}$$

$$C_p = -0.7753$$

$$p = 15.732(0.85)(-0.7753) = -10.4 \text{ psf}$$ **Ans**

External pressure on leeward side of roof

$$\frac{[-0.5 - (-0.3)]}{(0.5 - 0.25)} = \frac{(-0.5 - C_p)}{(0.5 - 0.3441)}$$

$$C_p = -0.3753$$

$$p = q_h G C_p$$
$$= 15.732(0.85)(-0.3753) = -5.02 \text{ psf}$$ **Ans**

Internal pressure

$$p = -q_h (G C_{pi}) = -15.732(\pm 0.18) = \mp 2.83 \text{ psf}$$ **Ans**

www.e-kitabi.com

c01.qxd 6/24/08 1:58 PM Page 7

© 2009 by R.C. Hibbeler. Published by Pearson Prentice Hall, Pearson Education, Inc., Upper Saddle River, NJ. All rights reserved. This material is protected under all copyright laws as they currently exist. No portion of this material may be reproduced, in any form or by any means, without permission in writing from the publisher.

***1–16.** Wind blows on the side of the fully enclosed agriculture building located on open flat terrain in Oklahoma. Determine the external pressure acting over the windward wall, the leeward wall, and the side walls. Also, what is the internal pressure in the building which acts on the walls? Use linear interpolation to determine q_h.

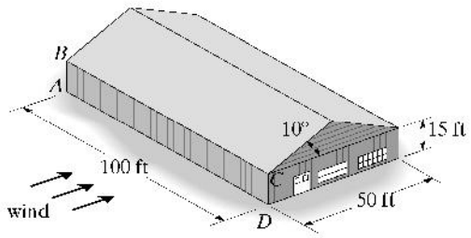

$$q_z = 0.00256 K_z K_{zt} K_d V^2 I$$

$$q_z = 0.00256 K_z (1)(1)(90)^2 (0.87)$$

$$q_{15} = 0.00256(0.85)(1)(1)(90)^2(0.87) = 15.334 \text{ psf}$$

$$q_{20} = 0.00256(0.90)(1)(1)(90)^2(0.87) = 16.236 \text{ psf}$$

$$h = 15 + \frac{1}{2}(25 \tan 10^\circ) = 17.204 \text{ ft}$$

$$\frac{q_h - 15.334}{17.204 - 15} = \frac{16.236 - 15.334}{20 - 15}$$

$$q_h = 15.732 \text{ psf}$$

External pressure on windward wall

$$p = q_z G C_p = 15.334(0.85)(0.8) = 10.4 \text{ psf} \quad \textbf{Ans}$$

External pressure on leeward wall $\quad \frac{L}{B} = \frac{50}{100} = 0.5$

$$p = q_h G C_p = 15.732(0.85)(-0.5) = -6.69 \text{ psf} \quad \textbf{Ans}$$

External pressure on side walls

$$p = q_h G C_p = 15.732(0.85)(-0.7) = -9.36 \text{ psf} \quad \textbf{Ans}$$

Internal pressure

$$p = -q_h (G C_{pi}) = -15.732(\pm 0.18) = \mp 2.83 \text{ psf} \quad \textbf{Ans}$$

www.e-kitabi.com

© 2009 by R.C. Hibbeler. Published by Pearson Prentice Hall, Pearson Education, Inc., Upper Saddle River, NJ. All rights reserved. This material is protected under all copyright laws as they currently exist. No portion of this material may be reproduced, in any form or by any means, without permission in writing from the publisher.

1–17. The horse stall has a flat roof with a slope of 80 mm/m. It is located in an open field where the ground snow load is 1.20 kN/m^2. Determine the snow load that is required to design the roof of the stall.

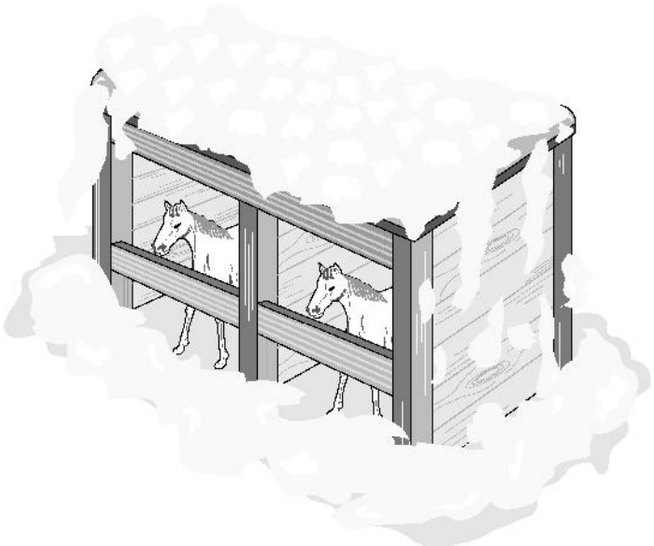

$\theta = \tan^{-1}\dfrac{80\text{ mm}}{1000\text{ mm}} = 4.57° < 5°$ Flat roof

$C_e = 0.8$

$C_t = 1.2$

$I = 0.8$

$p_f = 0.7 C_e C_t I p_g$

$p_f = 0.7(0.8)(1.2)(0.8)(1.20) = 0.645\text{ kN/m}^2$

Since $p_s \le 0.96\text{ kN/m}^2$, then also

$p_f = I p_g = 0.8(1.20) = 0.960\text{ kN/m}^2$

Use

$p_f = 0.960\text{ kN/m}^2$ **Ans.**

1–18. The horse stall has a flat roof with a slope of 80 mm/m. It is located in an open field where the ground snow load is 0.72 kN/m^2. Determine the snow load that is required to design the roof of the stall.

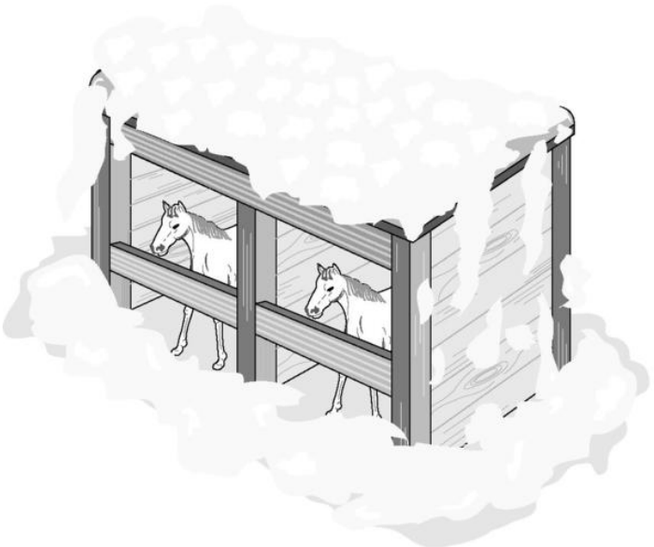

$\theta = \tan^{-1}\dfrac{80\text{ mm}}{1000\text{ mm}} = 4.57° < 5°$ Flat roof

$C_e = 0.8$

$C_t = 1.2$

$I = 0.8$

$p_f = 0.7 C_e C_t I p_g$

$p_f = 0.7(0.8)(1.2)(0.8)(0.72) = 0.387\text{ kN/m}^2$

Since $p_s \le 0.96\text{ kN/m}^2$, then also

$p_f = I p_g = 0.8(0.72) = 0.576\text{ kN/m}^2$

Use

$p_f = 0.576\text{ kN/m}^2$ **Ans.**

www.e-kitabi.com

c01.qxd 6/24/08 1:58 PM Page 9

© 2009 by R.C. Hibbeler. Published by Pearson Prentice Hall, Pearson Education, Inc., Upper Saddle River, NJ. All rights reserved. This material is protected under all copyright laws as they currently exist. No portion of this material may be reproduced, in any form or by any means, without permission in writing from the publisher.

1–19. A hospital located in Chicago, Illinois, has a flat roof, where the ground snow load is 25 lb/ft^2. Determine the design snow load on the roof of the hospital.

$C_e = 1.3$

$C_t = 1.0$

$I = 1.2$

$p_f = 0.7 C_e C_t I p_g$

$p_f = 0.7(1.3)(1.0)(1.2)(25) = 27.3 \text{ lbft}^2$

Since $p_g > 20$ lb /ft^2, then use

$p_f = I(20 \text{ lb/ft}^2) = 1.2(20 \text{ lb/ft}^2) = 24 \text{ lb/ft}^2$ **Ans.**

www.e-kitabi.com

c02.qxd 6/24/08 2:19 PM Page 11

© 2009 by R.C. Hibbeler. Published by Pearson Prentice Hall, Pearson Education, Inc., Upper Saddle River, NJ. All rights reserved. This material is protected under all copyright laws as they currently exist. No portion of this material may be reproduced, in any form or by any means, without permission in writing from the publisher.

2–1. The frame is used to support a wood deck (not shown) that is to be subjected to a uniform load of 130 lb/ft^2. Sketch the loading that acts along members BG and $ABCD$. Take $b = 10$ ft, $a = 5$ ft.

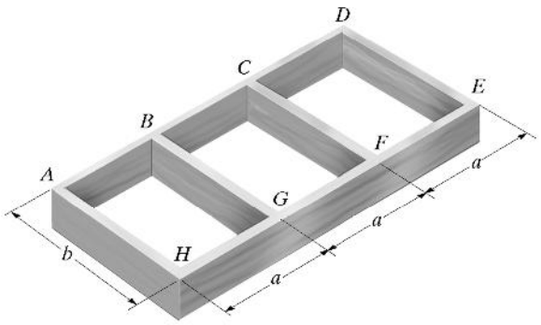

$b/a = 10/5 = 2 > 1.5$ (one-way slab)

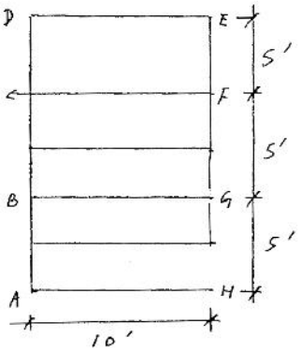

For member BG

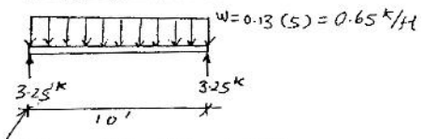

For member $ABCD$

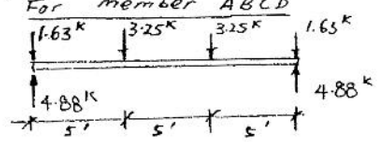

For BG, $w = 0.65$ k/ft **Ans**

For $ABCD$, reactions are 4.88 k **Ans**

2–2. The roof deck of the single story building is subjected to a dead plus live load of 125 lb/ft^2. If the purlins are spaced 4 ft and the bents are spaced 25 ft apart, determine the distributed loading that acts along the purlin DF, and the loadings that act on the bent at A, B, C, D, and E.

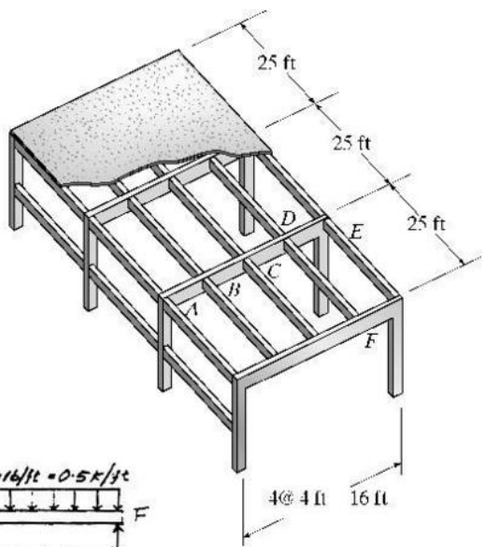

$$\frac{L_2}{L_1} = \frac{25}{4} = 6.25 > 2$$

One-way slab.

Tributary load along DF = (125 lb/ft^2)(4 ft) = 500 lb/ft **Ans**

This load is also transferred to the bent from the other side of AE. Half the tributary loading acts at A and E.

At A and E:

F = 6250 lb = 6.25 k **Ans**

At B, C, D:

F = 2(6250) = 12 500 lb = 12.5 k **Ans**

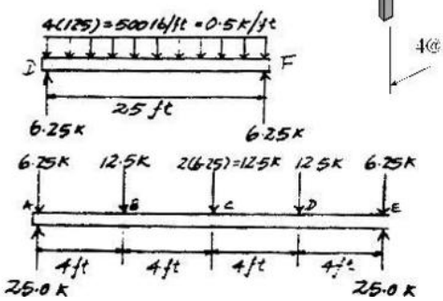

www.e-kitabi.com

© 2009 by R.C. Hibbeler. Published by Pearson Prentice Hall, Pearson Education, Inc., Upper Saddle River, NJ. All rights reserved. This material is protected under all copyright laws as they currently exist. No portion of this material may be reproduced, in any form or by any means, without permission in writing from the publisher.

2–3. The steel framework is used to support the 4-in. reinforced lightweight concrete slab that carries a uniform live loading of 500 lb/ft^2. Sketch the loading that acts along members BE and FD. Set $b = 10$ ft, $a = 7.5$ ft. *Hint:* See Table 1–3.

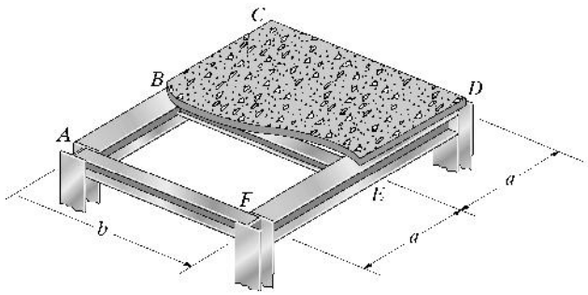

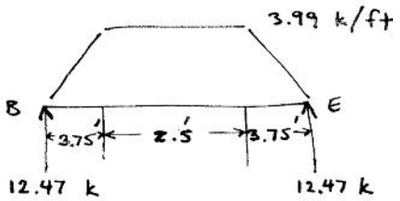

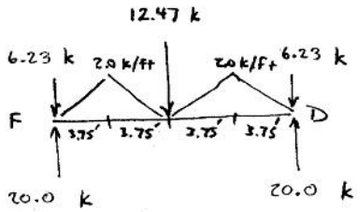

Reaction at B, 12.5 k;
Reaction at F, 20 k

***2–4.** Solve Prob. 2–3, with $b = 12$ ft, $a = 4$ ft.

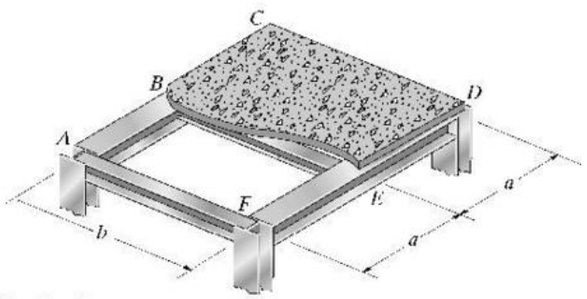

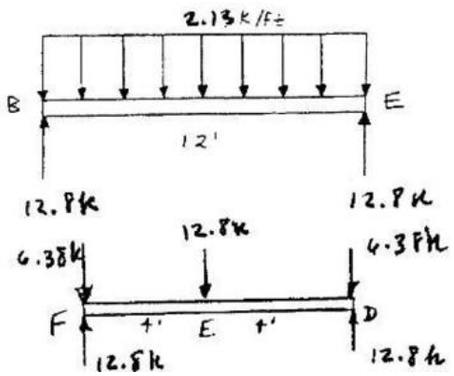

$DL = 8(4) = 32$ psf
$LL = 500$ psf
Total load = 532 psf

$\frac{L_2}{L_1} = \frac{b}{a} = \frac{12}{4} = 3 > 2$

One-way slab

2–5. The frame is used to support the wood deck in a residential dwelling. Sketch the loading that acts along members BG and $ABCD$. Set $b = 10$ ft, $a = 5$ ft. *Hint:* See Table 1–4.

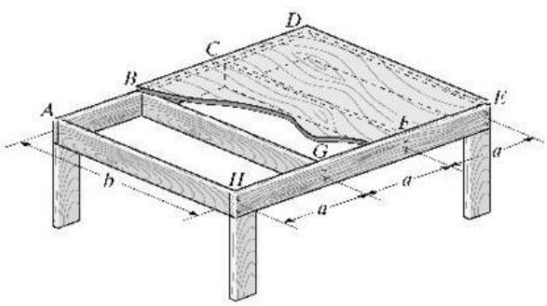

From Table 1-4
$LL = 40$ psf

$\frac{L_2}{L_1} = \frac{b}{a} = \frac{10}{5} = 2$

One-way slab

Reaction at A: 1500 lb

Ans

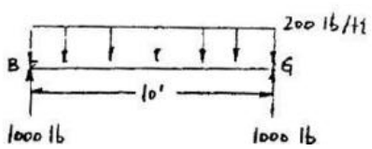

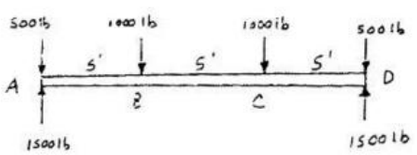

www.e-kitabi.com

© 2009 by R.C. Hibbeler. Published by Pearson Prentice Hall, Pearson Education, Inc., Upper Saddle River, NJ. All rights reserved. This material is protected under all copyright laws as they currently exist. No portion of this material may be reproduced, in any form or by any means, without permission in writing from the publisher.

2–6. Solve Prob. 2–5 if $b = 8$ ft, $a = 8$ ft.

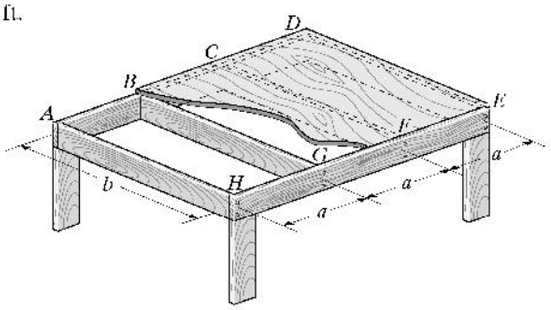

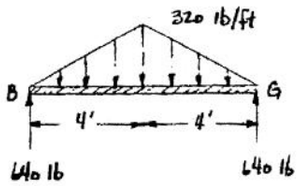

From Table 1–4

$LL = 40$ psf

$\frac{L_2}{L_1} = \frac{b}{a} = \frac{8}{8} = 1 < 2$

Two-way slab

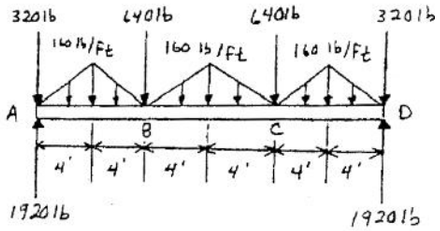

Reaction at A = 1920 lb **Ans**

2–7. Solve Prob. 2–5 if $b = 15$ ft, $a = 10$ ft.

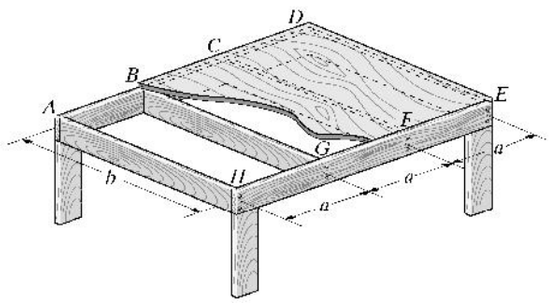

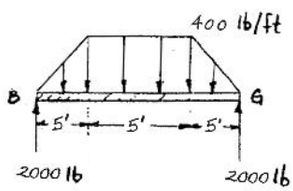

From Table 1–3,

$LL = 40$ psf

$b/a = 15/10 = 1.33 < 1.5$

Two-way slab

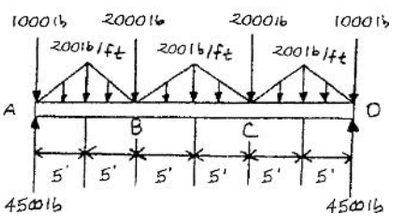

Reactions are 2000 lb and 4500 lb **Ans**

www.e-kitabi.com

c02.qxd 6/24/08 2:19 PM Page 14

© 2009 by R.C. Hibbeler. Published by Pearson Prentice Hall, Pearson Education, Inc., Upper Saddle River, NJ. All rights reserved. This material is protected under all copyright laws as they currently exist. No portion of this material may be reproduced, in any form or by any means, without permission in writing from the publisher.

***2–8.** Classify each of the structures as statically determinate, statically indeterminate, stable, or unstable. If indeterminate, specify the degree of indeterminacy.

(a)

(b)

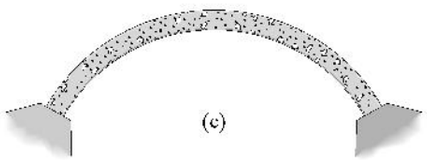

(c)

(d)

(a)

$r = 5, \quad n = 1$

$r > 3n$

$5 > 3(1)$

Indeterminate to 2°. Stable **Ans**

(b)

$r = 3, \quad n = 1$

$r = 3n$

$3 = 3(1)$

Determinate. Stable **Ans**

(c)

$r = 6, \quad n = 1$

$r > 3n$

$6 > 3(1)$

Indeterminate to 3°. Stable **Ans**

(d)

Unstable Concurrent Reactions **Ans**

(a)

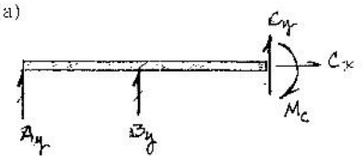

(b)

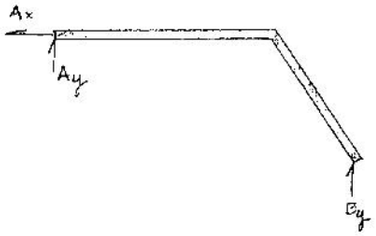

(c)

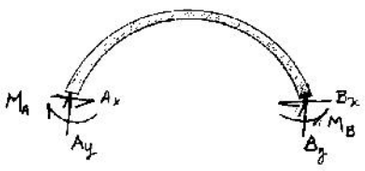

(d)

www.e-kitabi.com

c02.qxd 6/24/08 2:19 PM Page 15

© 2009 by R.C. Hibbeler. Published by Pearson Prentice Hall, Pearson Education, Inc., Upper Saddle River, NJ. All rights reserved. This material is protected under all copyright laws as they currently exist. No portion of this material may be reproduced, in any form or by any means, without permission in writing from the publisher.

2–9. Classify each of the structures as statically determinate, statically indeterminate, or unstable. If indeterminate, specify the degree of indeterminacy.

(a)

(b)

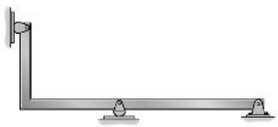

(c)

(d)

(a) Parallel reactions
Unstable.

Ans

(b) $r = 3n$
$6 = 3(2)$
Statically determinate.

Ans

(c) $r > 3n$
$4 > 3(1)$
Statically indeterminate to 1°

Ans

(d) $r > 3n$
$7 > 3(2)$
Statically indeterminate to 1°.

Ans

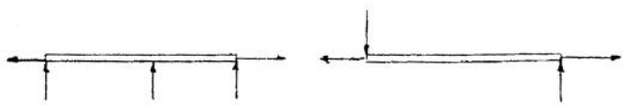

www.e-kitabi.com

c02.qxd 6/24/08 2:19 PM Page 16

© 2009 by R.C. Hibbeler. Published by Pearson Prentice Hall, Pearson Education, Inc., Upper Saddle River, NJ. All rights reserved. This material is protected under all copyright laws as they currently exist. No portion of this material may be reproduced, in any form or by any means, without permission in writing from the publisher.

2–10. Classify each of the structures as statically determinate, statically indeterminate, or unstable. If indeterminate, specify the degree of indeterminacy.

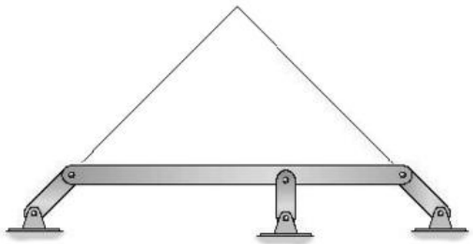

(a)

(b)

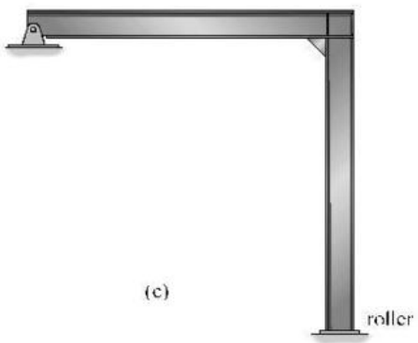

(c)

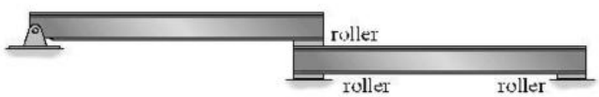

(d)

(a) $r = 3 \quad 3n = 3(1) = 3$
Statically determinate **Ans**

(b) $r = 6 \quad 3n = 3(1) = 3 < 6$
Indeterminate to 3° **Ans**

(c) $r = 3 \quad 3n = 3(1) = 3$
Statically determinate **Ans**

(d) Parallel reactions on lower beam
Unstable **Ans**

a)

b)

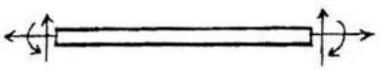

c)

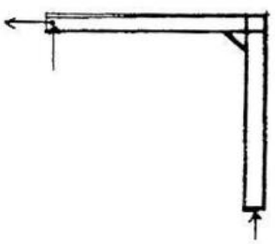

d)

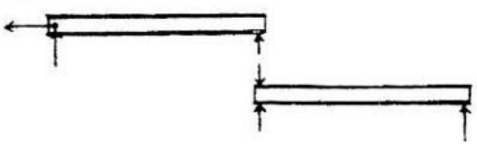

www.e-kitabi.com

c02.qxd 6/24/08 2:19 PM Page 17

© 2009 by R.C. Hibbeler. Published by Pearson Prentice Hall, Pearson Education, Inc., Upper Saddle River, NJ. All rights reserved. This material is protected under all copyright laws as they currently exist. No portion of this material may be reproduced, in any form or by any means, without permission in writing from the publisher.

2–11. Classify each of the structures as statically determinate, statically indeterminate, or unstable. If indeterminate, specify the degree of indeterminacy.

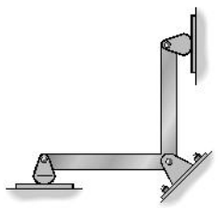

(a)

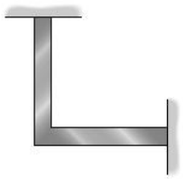

(c)

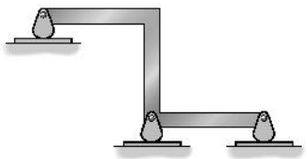

(b)

(d)

(a)

$r > 3n$

$4 > 3(1)$

Statically indeterminate to 1° **Ans**

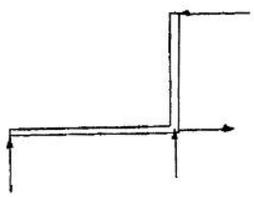

(b)

Parallel reactions

Unstable. **Ans**

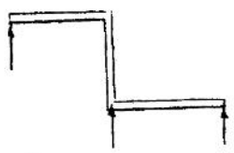

(c)

$r > 3n$

$6 > 3(1)$

Statically indeterminate to 3° **Ans**

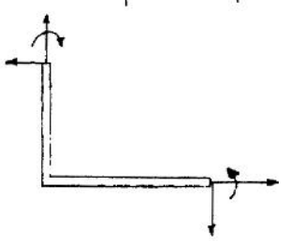

(d)

Parallel reactions

Unstable. **Ans**

www.e-kitabi.com

c02.qxd 6/24/08 2:19 PM Page 18

© 2009 by R.C. Hibbeler. Published by Pearson Prentice Hall, Pearson Education, Inc., Upper Saddle River, NJ. All rights reserved. This material is protected under all copyright laws as they currently exist. No portion of this material may be reproduced, in any form or by any means, without permission in writing from the publisher.

***2–12.** Classify each of the structures as statically determinate, statically indeterminate, or unstable. If indeterminate, specify the degree of indeterminacy. The supports or connections are to be assumed as stated.

(a)

(a)

$r > 3n$

$6 > 3(1)$

Statically indeterminate to 3°. **Ans**

(b)

(b)

(b)

$r > 3n$

$4 > 3(1)$

Statically indeterminate to 1°. **Ans**

(c)

(c)

(c)

$r > 3n$

$4 > 3(1)$

Statically indeterminate to 1°. **Ans**

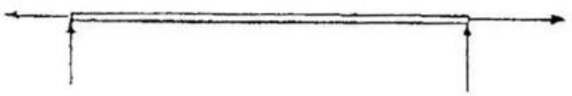

(d)

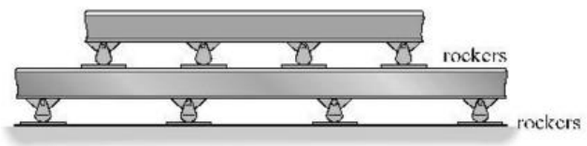

(d)

(d)

Parallel reactions.

Unstable. **Ans**

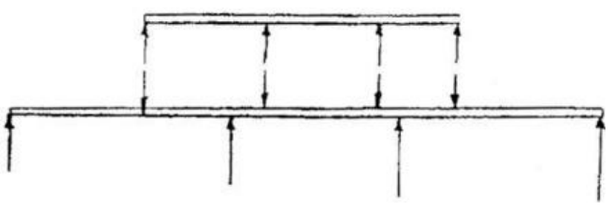

www.e-kitabi.com

c02.qxd 6/24/08 2:19 PM Page 19

© 2009 by R.C. Hibbeler. Published by Pearson Prentice Hall, Pearson Education, Inc., Upper Saddle River, NJ. All rights reserved. This material is protected under all copyright laws as they currently exist. No portion of this material may be reproduced, in any form or by any means, without permission in writing from the publisher.

2–13. Classify each of the structures as statically d minate statically indeterminate, or unstable. If indet nate, specify the degree of indeterminacy.

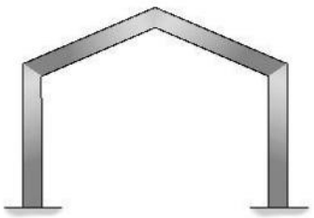

(a)

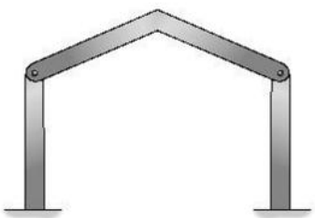

(b)

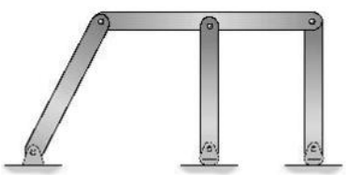

(c)

(a)

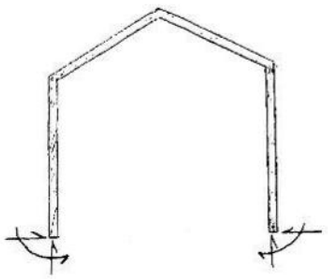

(b)

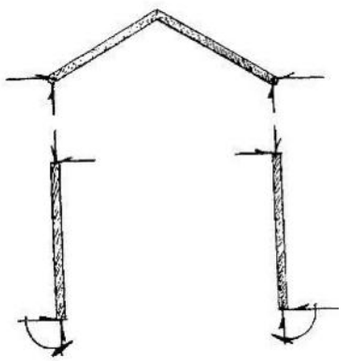

(c)

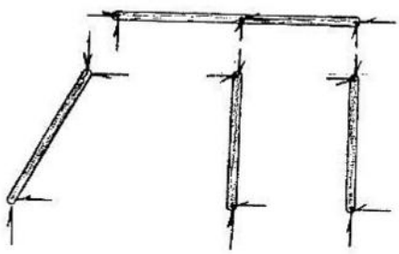

(a)

$r = 6, \quad n = 1$

$r > 3n$

$6 = 3(1)$

Indeterminanat to 3° **Ans**

(b)

$r = 10, \quad n = 3$

$r > 3n$

$10 = 3(3)$

Statically indeterminate to the 1° **Ans**

(c)

$r = 12, \quad n = 4$

$r = 3n$

$12 = 3(4)$

Statically determinate **Ans**

www.e-kitabi.com

c02.qxd 6/24/08 2:19 PM Page 20

© 2009 by R.C. Hibbeler. Published by Pearson Prentice Hall, Pearson Education, Inc., Upper Saddle River, NJ. All rights reserved. This material is protected under all copyright laws as they currently exist. No portion of this material may be reproduced, in any form or by any means, without permission in writing from the publisher.

2–14. Classify each of the frames as statically determinate, statically indeterminate, or unstable. If indeterminate, specify the degree of indeterminacy. All internal joints are fixed connected.

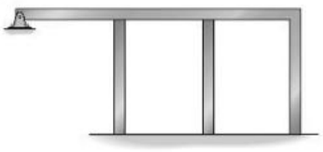

(a)

(a) $r > 3n$
$20 > 3(4)$
Statically indeterminate to 8°. **Ans**

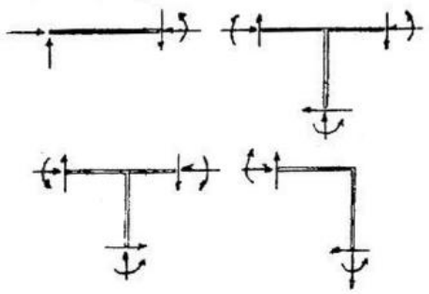

(b)

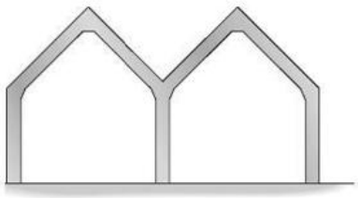

(c)

(b) $r = 3n$
$3 = 3(1)$
Statically determinate. **Ans**

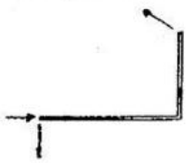

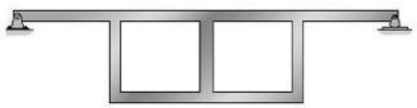

(d)

(c) $r > 3n$
$15 > 3(3)$
Statically indeterminate to 6°. **Ans**

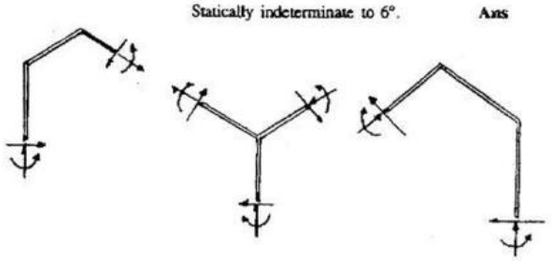

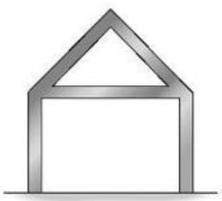

(e)

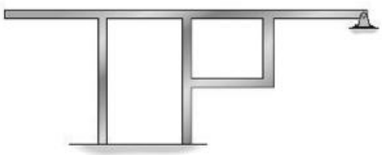

(f)

(d) $r > 3n$
$15 > 3(3)$
Statically indeterminate to 6°. **Ans**

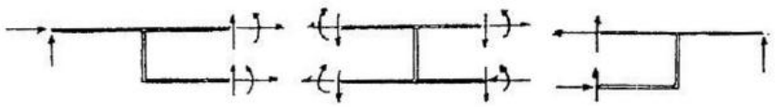

(e) $r > 3n$
$12 > 3(2)$
Statically indeterminate to 6°. **Ans**

(f) $r > 3n$
$17 > 3(3)$
Statically indeterminate to 8°. **Ans**

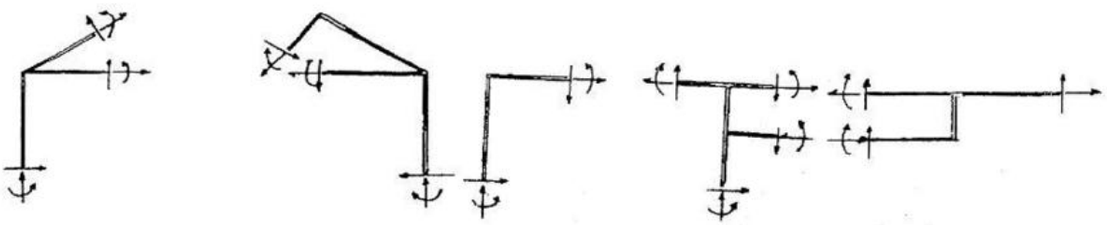

www.e-kitabi.com

c02.qxd 6/24/08 2:19 PM Page 21

© 2009 by R.C. Hibbeler. Published by Pearson Prentice Hall, Pearson Education, Inc., Upper Saddle River, NJ. All rights reserved. This material is protected under all copyright laws as they currently exist. No portion of this material may be reproduced, in any form or by any means, without permission in writing from the publisher.

2–15. Determine the degree to which the frames are statically indeterminate. All internal joints are fixed connected.

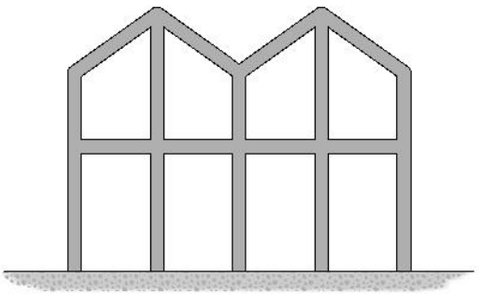

(a)

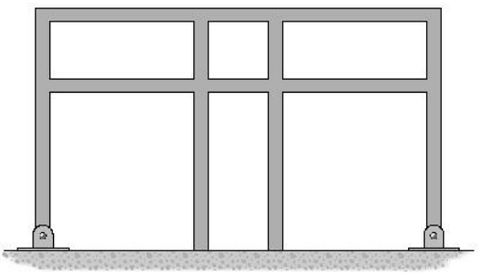

(b)

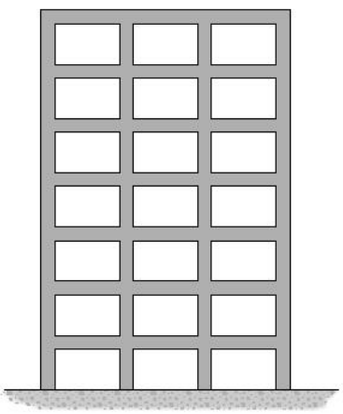

(c)

(a) Statically indeterminate to 24° **Ans**

(b) Statically indeterminate to 16° **Ans**

Statically indeterminate to 63° **Ans**

(a) $39 - 15 = 24°$

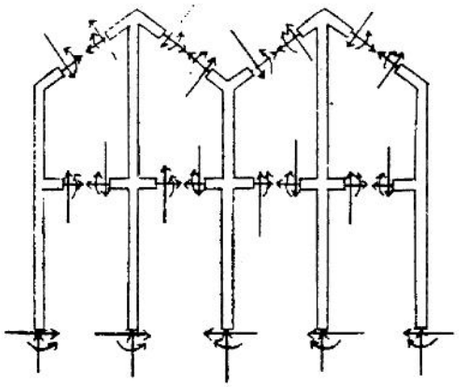

(b) $28 - 12 = 16°$

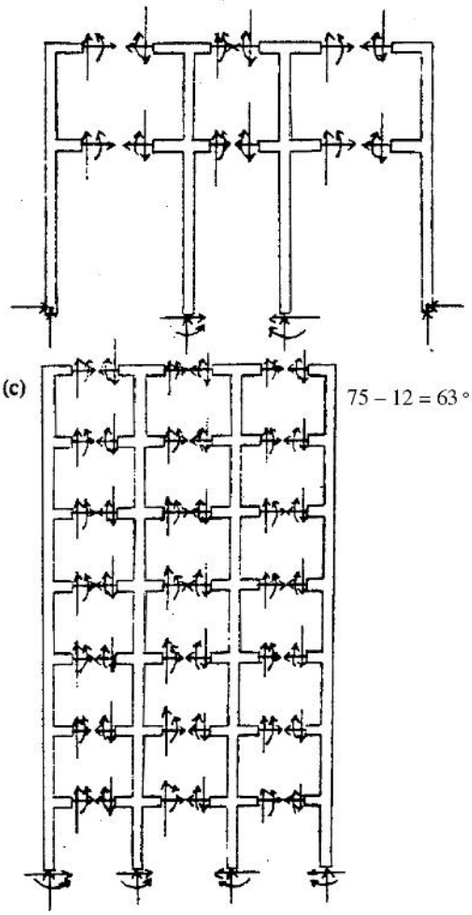

(c) $75 - 12 = 63°$

www.e-kitabi.com

c02.qxd 6/24/08 2:19 PM Page 22

© 2009 by R.C. Hibbeler. Published by Pearson Prentice Hall, Pearson Education, Inc., Upper Saddle River, NJ. All rights reserved. This material is protected under all copyright laws as they currently exist. No portion of this material may be reproduced, in any form or by any means, without permission in writing from the publisher.

***2–16.** Classify each of the structures as statically determinate, statically indeterminate, or unstable. If indeterminate, specify the degree of indeterminacy. The supports or connections are to be assumed as stated.

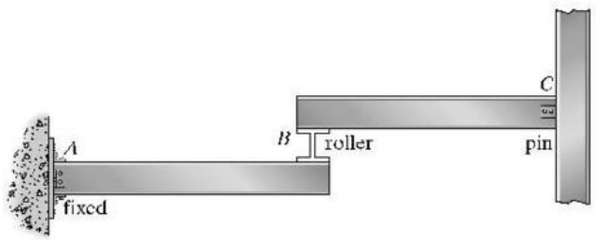

(a)

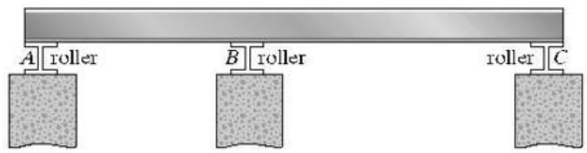

(b)

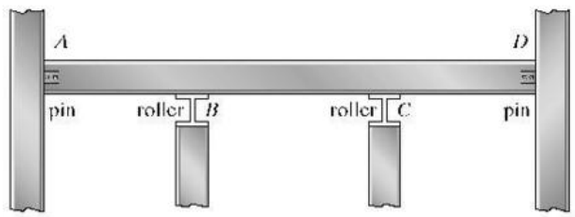

(c)

(a)

$r = 3n$

$6 = 3(2)$

Statically determinate. **Ans**

(b)

Parallel reactions

Unstable. **Ans**

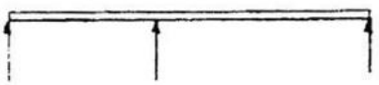

(c)

$r > 3n$

$6 > 3(1)$

Statically indeterminate to the 3°. **Ans**

2–17. Determine the reactions on the beam. The support at B can be assumed to be a roller. Neglect the thickness of the beam.

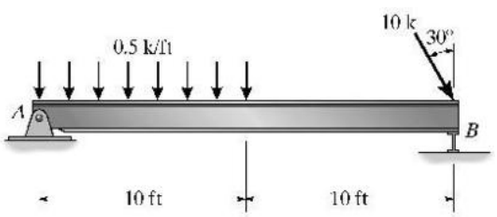

$\zeta + \Sigma M_A = 0;\ B_y(20) - 10\cos 30°(20) - 5(5) = 0$

$B_y = 9.91\ \text{k}$ **Ans**

$+\uparrow \Sigma F_y = 0;\ A_y + 9.910 - 5 - 10\cos 30° = 0$

$A_y = 3.75\ \text{k}$ **Ans**

$\pm \Sigma F_x = 0;\ -A_x + 10\sin 30° = 0$

$A_x = 5.00\ \text{k}$ **Ans**

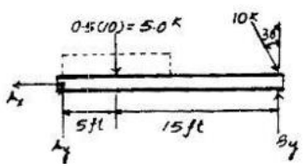

www.e-kitabi.com

© 2009 by R.C. Hibbeler. Published by Pearson Prentice Hall, Pearson Education, Inc., Upper Saddle River, NJ. All rights reserved. This material is protected under all copyright laws as they currently exist. No portion of this material may be reproduced, in any form or by any means, without permission in writing from the publisher.

2–18. Determine the reactions at the supports A and B. Assume A is a roller and B is a pin.

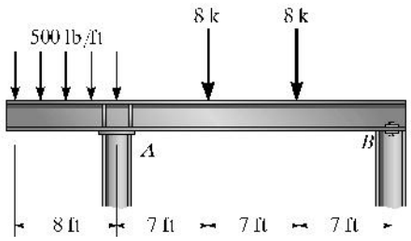

$\zeta + \Sigma M_B = 0;\ -A_y(21) + 8(7) + 8(14) + 4(25) = 0$
$A_y = 12.8\ \text{k}$ **Ans**

$+\uparrow \Sigma F_y = 0;\ B_y + 12.76 - 4 - 8 - 8 = 0$
$B_y = 7.24\ \text{k}$ **Ans**

$\pm \Sigma F_x = 0;\ B_x = 0$ **Ans**

2–19. Determine the reactions on the beam.

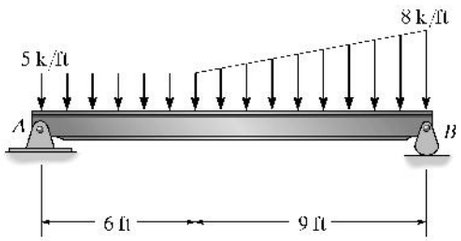

$\zeta + \Sigma M_A = 0;\ B_y(15) - 75(7.5) - 13.5(12) = 0$
$B_y = 48.3\ \text{k}$ **Ans**

$+\uparrow \Sigma F_y = 0;\ A_y + 48.3 - 75 - 13.5 = 0$
$A_y = 40.2\ \text{k}$ **Ans**

$\pm \Sigma F_x = 0;$
$A_x = 0$ **Ans**

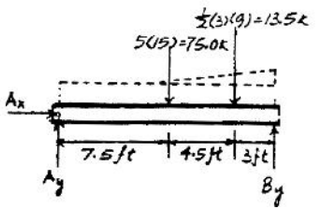

***2–20.** Determine the reactions on the beam.

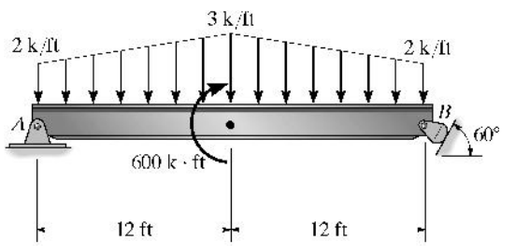

$\zeta + \Sigma M_A = 0;\quad -60(12) - 600 + F_B \cos 60°(24)$
$F_B = 110.00\ \text{k} = 110\ \text{k}$ **Ans**

$\pm \Sigma F_x = 0;\quad A_x - 110.00 \sin 60° = 0$
$A_x = 95.3\ \text{k}$ **Ans**

$+\uparrow \Sigma F_y = 0;\quad A_y + 110.00 \cos 60° - 60 = 0$
$A_y = 5.00\ \text{k}$ **Ans**

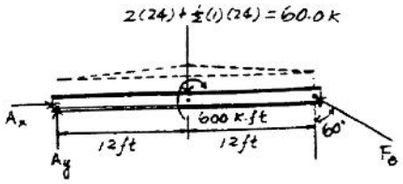

www.e-kitabi.com

© 2009 by R.C. Hibbeler. Published by Pearson Prentice Hall, Pearson Education, Inc., Upper Saddle River, NJ. All rights reserved. This material is protected under all copyright laws as they currently exist. No portion of this material may be reproduced, in any form or by any means, without permission in writing from the publisher.

2–21. Determine the reactions on the beam.

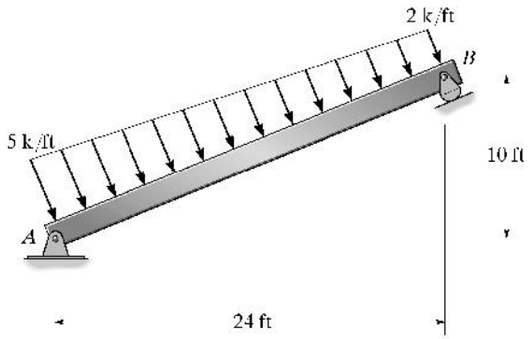

$\zeta + \Sigma M_A = 0;\ F_B(26) - 52(13) - 39\left(\frac{1}{3}\right)(26) = 0$

$F_B = 39.0\,\text{k}$ **Ans**

$+\uparrow \Sigma F_y = 0;\ A_y - \frac{12}{13}(39) - \left(\frac{12}{13}\right)52 + \left(\frac{12}{13}\right)(39.0) = 0$

$A_y = 48.0\,\text{k}$ **Ans**

$\pm \Sigma F_x = 0;\ -A_x + \left(\frac{5}{13}\right)39 + \left(\frac{5}{13}\right)52 - \left(\frac{5}{13}\right)39.0 = 0$

$A_x = 20.0\,\text{k}$ **Ans**

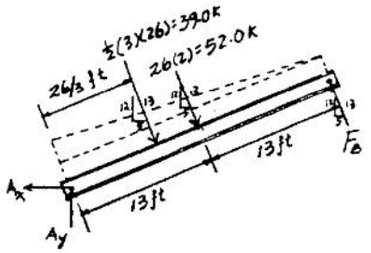

2–22. Determine the reactions at the supports A and B. The floor decks CD, DE, EF, and FG transmit their loads to the girder on smooth supports. Assume A is a roller and B is a pin.

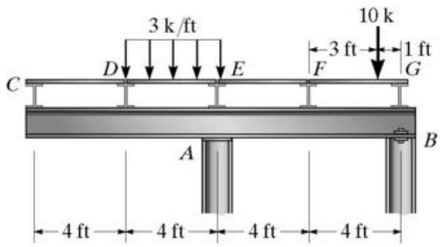

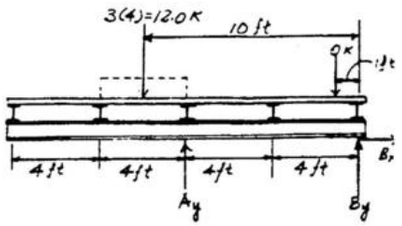

Consider the entire system.

$\zeta + \Sigma M_B = 0;\ 10(1) + 12(10) - A_y(8) = 0$

$A_y = 16.25\,\text{k} = 16.3\,\text{k}$ **Ans**

$\pm \Sigma F_x = 0;\ B_x = 0$ **Ans**

$+\uparrow \Sigma F_y = 0;\ 16.25 - 12 - 10 + B_y = 0$

$B_y = 5.75\,\text{k}$ **Ans**

www.e-kitabi.com

© 2009 by R.C. Hibbeler. Published by Pearson Prentice Hall, Pearson Education, Inc., Upper Saddle River, NJ. All rights reserved. This material is protected under all copyright laws as they currently exist. No portion of this material may be reproduced, in any form or by any means, without permission in writing from the publisher.

2–23. Determine the reactions at the supports A and B of the compound beam. There is a pin at C.

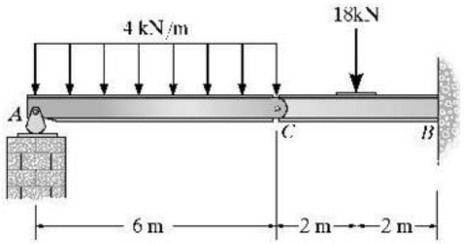

Section AC

$\zeta + \Sigma M_C = 0;$ $\quad 24\ \text{kN}(3\ \text{m}) - A_y(6\ \text{m}) = 0$

$A_y = 12\ \text{kN}$

$+\uparrow \Sigma F_y = 0;$ $\quad 12\ \text{kN} - 24\ \text{kN} + C_y = 0$

$C_y = 12\ \text{kN}$

$\pm \Sigma F_x = 0$ $\quad C_x = 0$

Section CB

$\zeta + \Sigma M_B = 0$ $\quad -M_B + 18\ \text{kN}(2\ \text{m}) + 12\ \text{kN}(4\ \text{m}) = 0$

$M_B = 84\ \text{kN}\cdot\text{m}$

$+\uparrow \Sigma F_y = 0;$ $\quad -12\ \text{kN} - 18\ \text{kN} + B_y = 0$

$B_y = 30\ \text{kN}$

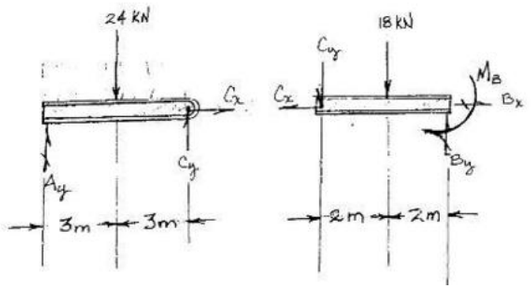

***2–24.** The pad footing is used to support the load of 12 000 lb. Determine the intensities w_1 and w_2 of the distributed loading acting on the base of the footing for equilibrium.

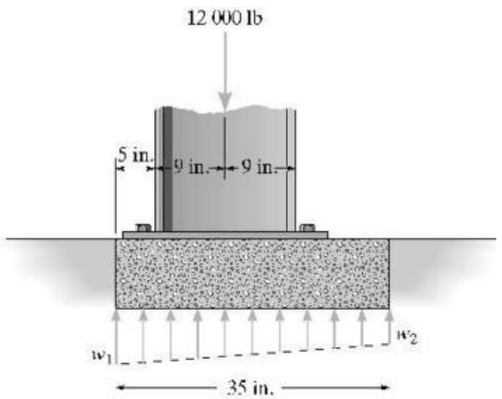

Equations of Equilibrium: The load intensity w_2 can be determined directly by summing moments about point A.

$\zeta + \Sigma M_A = 0;$ $\quad w_2\left(\frac{35}{12}\right)(17.5 - 11.67) - 12(14 - 11.67) = 0$

$w_2 = 1.646\ \text{kip/ft} = 1.65\ \text{kip/ft}$ **Ans**

$+\uparrow \Sigma F_y = 0;$ $\quad \frac{1}{2}(w_1 - 1.646)\left(\frac{35}{12}\right) + 1.646\left(\frac{35}{12}\right) - 12 = 0$

$w_1 = 6.58\ \text{kip/ft}$ **Ans**

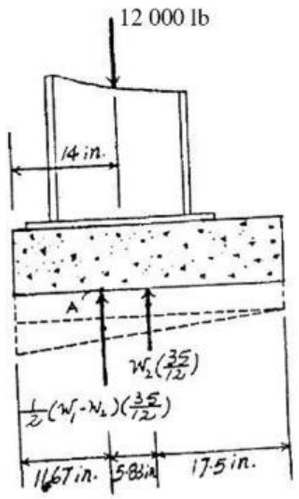

www.e-kitabi.com

© 2009 by R.C. Hibbeler. Published by Pearson Prentice Hall, Pearson Education, Inc., Upper Saddle River, NJ. All rights reserved. This material is protected under all copyright laws as they currently exist. No portion of this material may be reproduced, in any form or by any means, without permission in writing from the publisher.

2–25. Determine the reactions on the beam.

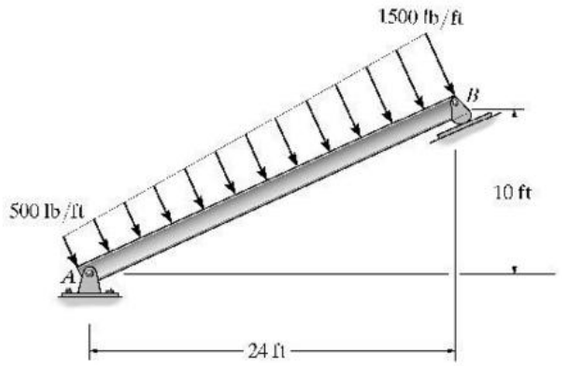

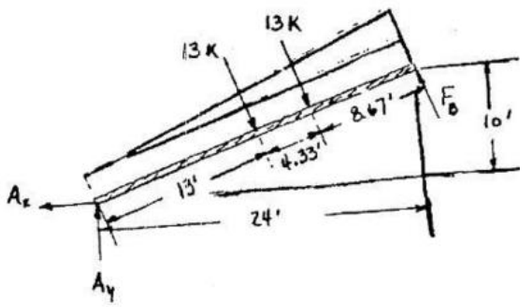

$(+\Sigma M_A = 0;$ $F_B(26) - 13(13) - 13(17.33) = 0$

$F_B = 15.17\text{ k} = 15.2\text{ k}$ **Ans**

$\rightarrow \Sigma F_x = 0;$ $-A_x + 26\left(\frac{10}{26}\right) - 15.17\left(\frac{10}{26}\right) = 0$

$A_x = 4.17\text{ k}$ **Ans**

$+\uparrow \Sigma F_y = 0;$ $A_y - 26\left(\frac{24}{26}\right) + 15.17\left(\frac{24}{26}\right) = 0$

$A_y = 10.0\text{ k}$ **Ans**

2–26. Determine the reactions at the smooth support C and pinned support A. Assume the connection at B is fixed connected.

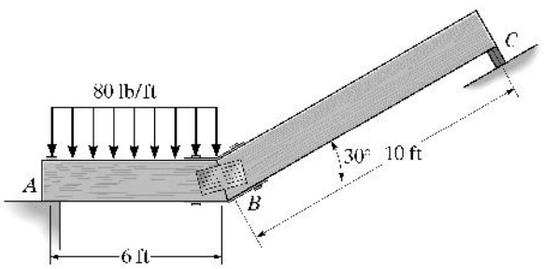

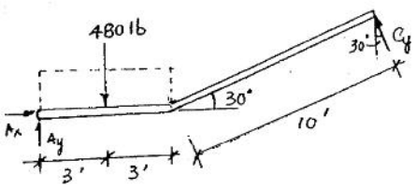

$+\Sigma M_A = 0;$ $C_y(10 + 6\sin 60°) - 480(3) = 0$

$C_y = 94.76\text{ lb} = 94.8\text{ lb}$ **Ans.**

$+\rightarrow \Sigma F_x = 0;$ $A_x - 94.76\sin 30° = 0$

$A_x = 47.4\text{ lb}$ **Ans.**

$+\uparrow \Sigma F_y = 0;$ $A_y + 94.76\cos 30° - 480 = 0$

$A_y = 398\text{ lb}$ **Ans.**

www.e-kitabi.com

© 2009 by R.C. Hibbeler. Published by Pearson Prentice Hall, Pearson Education, Inc., Upper Saddle River, NJ. All rights reserved. This material is protected under all copyright laws as they currently exist. No portion of this material may be reproduced, in any form or by any means, without permission in writing from the publisher.

2–27. Determine the reactions at the smooth support A and pin support B. The connection at C is fixed.

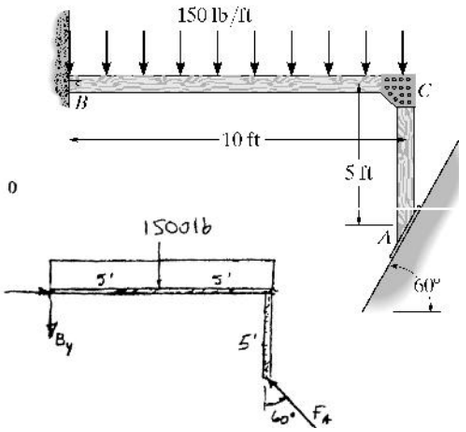

$\left(+\Sigma M_B = 0;\right.$ $-1500(5) + (F_A)(\cos 60^\circ)(10) - (F_A)(\sin 60^\circ)(5) = 0$

$F_A = 11,196.15 \text{ lb} = 11.2 \text{ k}$ **Ans**

$\overset{+}{\rightarrow}\Sigma F_x = 0;$ $B_x - 11,196.15(\sin 60^\circ) = 0$

$B_x = 9.70 \text{ k}$ **Ans**

$+\uparrow \Sigma F_y = 0;$ $-B_y - 1500 + 11,196.15(\cos 60^\circ) = 0$

$B_y = 4.10 \text{ k}$ **Ans**

***2–28.** The cantilever footing is used to support a wall near its edge A so that it causes a uniform soil pressure under the footing. Determine the uniform distribution loads, w_A and w_B, measured in lb/ft at pads A and B, necessary to support the wall forces of 8000 lb and 20 000 lb.

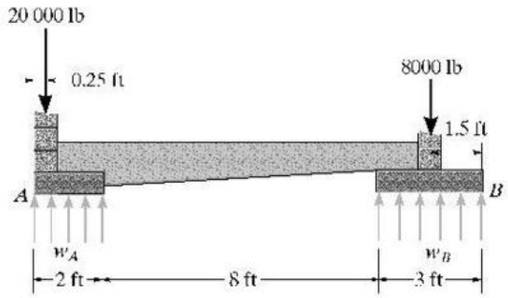

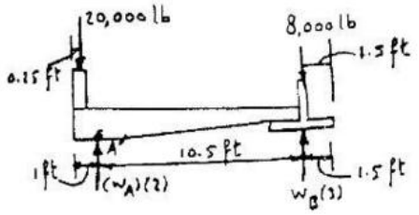

$\left(+\Sigma M_A = 0;\right.$ $-8000(10.5) + w_B(3)(10.5) + 20\,000(0.75) = 0$

$w_B = 2190.5 \text{ lb/ft} = 2.19 \text{ kip/ft}$ **Ans**

$+\uparrow \Sigma F_y = 0;$ $2190.5(3) - 28\,000 + w_A(2) = 0$

$w_A = 10.7 \text{ kip/ft}$ **Ans**

2–29. Determine the reactions at the truss supports A and B. The distributed loading is caused by wind.

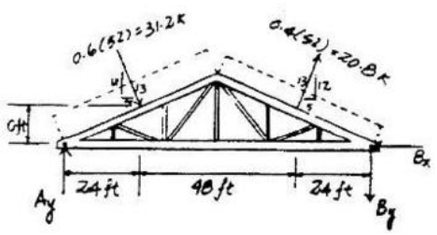

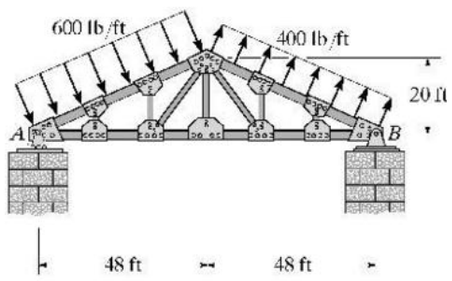

$\left(+\Sigma M_A = 0;\right.$ $-B_y(96) + \left(\frac{12}{13}\right)20.8(72) - \left(\frac{5}{13}\right)20.8(10) - \left(\frac{12}{13}\right)31.2(24) - \left(\frac{5}{13}\right)31.2(10) = 0$

$B_y = 5.117 \text{ kN} = 5.12 \text{ kN}$ **Ans**

$+\uparrow \Sigma F_y = 0;$ $A_y - 5.117 + \left(\frac{12}{13}\right)20.8 - \left(\frac{12}{13}\right)31.2 = 0$

$A_y = 14.7 \text{ kN}$ **Ans**

$\overset{+}{\rightarrow}\Sigma F_x = 0;$ $-B_x + \left(\frac{5}{13}\right)31.2 + \left(\frac{5}{13}\right)20.8 = 0$

$B_x = 20.0 \text{ kN}$ **Ans**

www.e-kitabi.com

© 2009 by R.C. Hibbeler. Published by Pearson Prentice Hall, Pearson Education, Inc., Upper Saddle River, NJ. All rights reserved. This material is protected under all copyright laws as they currently exist. No portion of this material may be reproduced, in any form or by any means, without permission in writing from the publisher.

2–30. The jib crane is pin-connected at A and supported by a smooth collar at B. Determine the roller placement x of the 5000-lb load so that it gives the maximum and minimum reactions at the supports. Calculate these reactions in each case. Neglect the weight of the crane. Require $4 \text{ ft} \le x \le 10 \text{ ft}$.

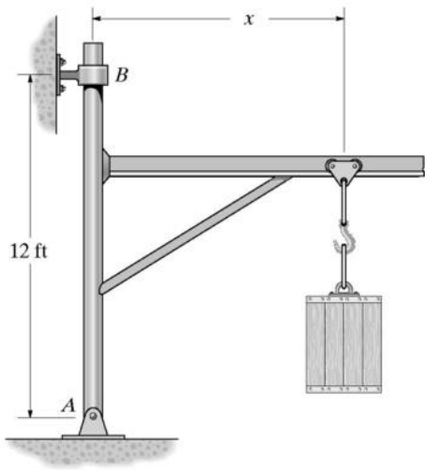

Equations of Equilibrium :

$$\zeta + \Sigma M_A = 0; \quad N_B(12) - 5x = 0 \quad N_B = 0.4167x \qquad [1]$$

$$+\uparrow \Sigma F_y = 0; \quad A_y - 5 = 0 \quad A_y = 5.00 \text{ kip} \qquad [2]$$

$$\overset{+}{\rightarrow} \Sigma F_x = 0; \quad A_x - 0.4167x = 0 \quad A_x = 0.4167x \qquad [3]$$

By observation, the **maximum support reactions** occur when

$$x = 10 \text{ ft} \qquad \textbf{Ans}$$

With $x = 10$ ft, from Eqs. [1], [2] and [3], the **maximum support reactions** are

$$A_x = N_B = 4.17 \text{ kip} \quad A_y = 5.00 \text{ kip} \qquad \textbf{Ans}$$

By observation, the **minimum support reactions** occur when

$$x = 4 \text{ ft} \qquad \textbf{Ans}$$

With $x = 4$ ft, from Eqs. [1], [2] and [3], the **minimum support reactions** are

$$A_x = N_B = 1.67 \text{ kip} \quad A_y = 5.00 \text{ kip} \qquad \textbf{Ans}$$

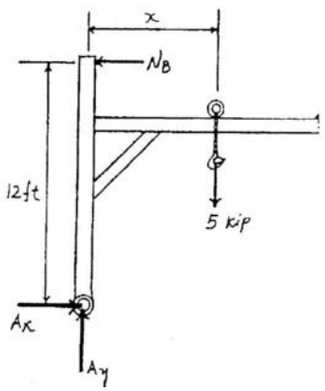

2–31. Determine the reactions at the supports A and B of the frame. Assume that the support at A is a roller.

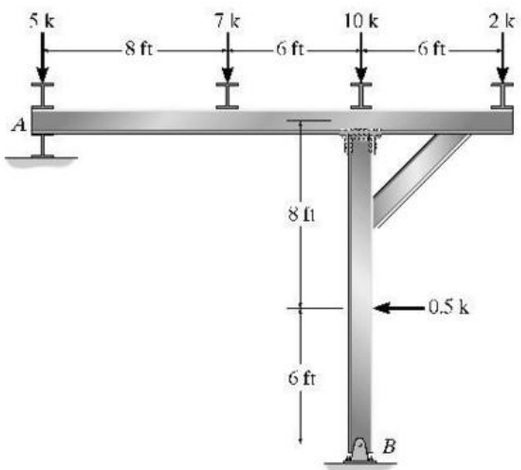

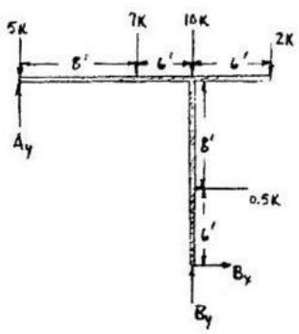

$$\zeta + \Sigma M_B = 0; \quad -(0.5)(6) + (2)(6) - (7)(6) - (5)(14) + A_y(14) = 0$$
$$A_y = 7.36 \text{ k} \qquad \textbf{Ans}$$

$$+\uparrow \Sigma F_y = 0; \quad 7.36 - 5 - 7 - 10 - 2 + B_y = 0$$
$$B_y = 16.6 \text{ k} \qquad \textbf{Ans}$$

$$\overset{+}{\rightarrow} \Sigma F_x = 0; \quad -0.5 + B_x = 0$$
$$B_x = 0.500 \text{ k} \qquad \textbf{Ans}$$

www.e-kitabi.com

© 2009 by R.C. Hibbeler. Published by Pearson Prentice Hall, Pearson Education, Inc., Upper Saddle River, NJ. All rights reserved. This material is protected under all copyright laws as they currently exist. No portion of this material may be reproduced, in any form or by any means, without permission in writing from the publisher.

***2–32.** Determine the reactions at the truss supports A and B. The distributed loading is caused by wind pressure.

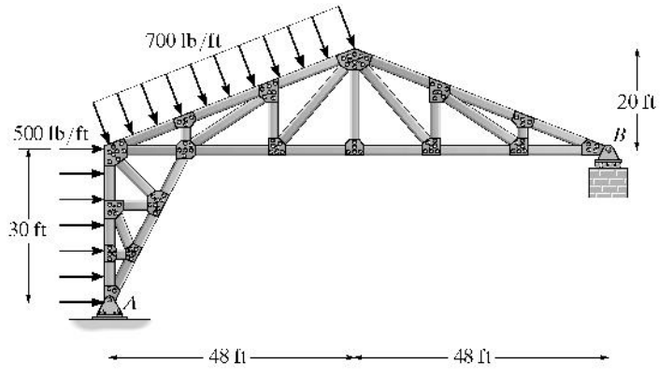

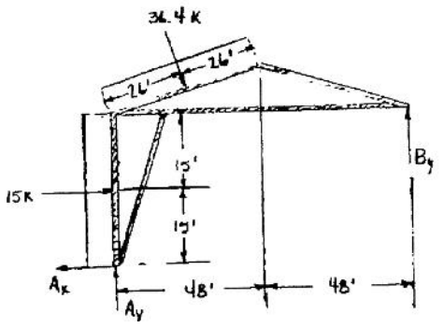

700 lb/ft at 52 ft = 36,400 lb or 36.4 k
500 lb/ft at 30 ft = 15,000 lb or 15.0 k

$\zeta + \Sigma M_A = 0$: $\quad 96(B_y) - 24\left(\frac{48}{52}\right)(36.4) - 40\left(\frac{20}{52}\right)(36.4) - 15(15) = 0$

$B_y = 16.58 \text{ k} = 16.6 \text{ k}$ **Ans**

$\pm \Sigma F_x = 0$: $\quad 15 + \frac{20}{52}(36.4) - A_x = 0;\ A_x = 29.0 \text{ k}$ **Ans**

$+\uparrow \Sigma F_y = 0$: $\quad A_y + B_y - \frac{48}{52}(36.4) = 0;\ A_y = 17.0 \text{ k}$ **Ans**

2–33. Determine the horizontal and vertical components of reaction at the supports A and B. The joints at C and D are fixed connections.

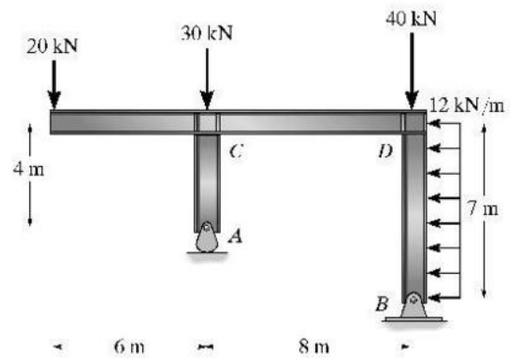

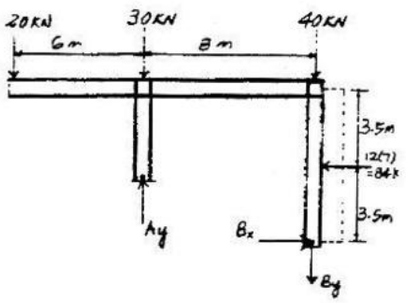

$\zeta + \Sigma M_B = 0;\ 20(14) + 30(8) + 84(3.5) - A_y(8) = 0$

$A_y = 101.75 \text{ kN} = 102 \text{ kN}$ **Ans**

$\pm \Sigma F_x = 0;\ B_x - 84 = 0$

$B_x = 84.0 \text{ kN}$ **Ans**

$+\uparrow \Sigma F_y = 0;\ 101.75 - 20 - 30 - 40 - B_y = 0$

$B_y = 11.75 \text{ kN}$ **Ans**

www.e-kitabi.com

© 2009 by R.C. Hibbeler. Published by Pearson Prentice Hall, Pearson Education, Inc., Upper Saddle River, NJ. All rights reserved. This material is protected under all copyright laws as they currently exist. No portion of this material may be reproduced, in any form or by any means, without permission in writing from the publisher.

2–34. Determine the reactions at the supports A, B, and E. Assume the bearing support at B is a roller.

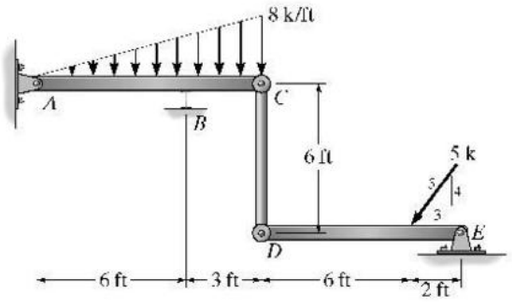

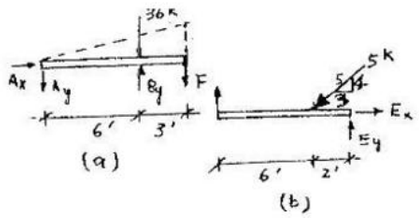

From *FBD* (*b*)

$+\Sigma M_E = 0;\ F(8) - 5\left(\frac{4}{5}\right)(2) = 0 \qquad F = 1.00\ \text{k}$

$+\uparrow \Sigma F_y = 0;\ E_y + 1.00 - 5\left(\frac{4}{5}\right) = 0 \qquad E_y = 3.00\ \text{k}$ **Ans.**

$+\rightarrow \Sigma F_x = 0;\ E_x + 1.00 - 5\left(\frac{4}{5}\right) = 0 \qquad E_x = 3.00\ \text{k}$ **Ans.**

From *FBD* (*a*)

$+\Sigma M_A = 0;\ B_y(6) - 36(6) - 1.00(9) = 0 \qquad B_y = 37.5\ \text{k}$ **Ans.**

$+\downarrow \Sigma F_y = 0;\ A_y - 37.5 + 36 + 1.00 = 0 \qquad A_y = 0.50\ \text{k}$ **Ans.**

$+\rightarrow \Sigma F_x = 0; \qquad A_x = 0$ **Ans.**

2–35. Determine the reactions at the supports A, B, C, and D.

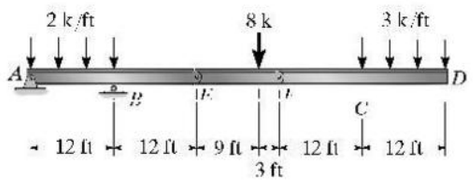

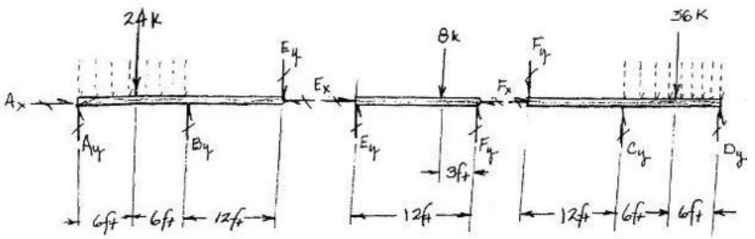

Member EF:

$+\circlearrowleft \Sigma M_F = 0;\ 8\ \text{k}(3\ \text{ft}) - E_y(12\ \text{ft}) = 0$

$E_y = 2\ \text{k}$

$+\uparrow \Sigma F_y = 0;\ 2\ \text{k} - 8\ \text{k} + F_y = 0$

$F_y = 6\ \text{k}$

Member ABE:

$+\circlearrowleft \Sigma M_A = 0; \quad -24\ \text{k}(6\ \text{ft}) + B_y(12\ \text{ft}) - 2\ \text{k}(24\ \text{ft}) = 0$

$B_y = 16\ \text{k}$ **Ans**

$+\uparrow \Sigma F_y = 0; \quad A_y - 24\ \text{k} + 16\ \text{k} - 2\ \text{k} = 0$

$A_y = 10\ \text{k}$ **Ans**

Member FCD:

$+\circlearrowleft \Sigma M_D = 0; \quad 36\ \text{k}(6\ \text{ft}) - C_y(12\ \text{ft}) + (24\ \text{ft})(6\ \text{k}) = 0$

$C_y = 30\ \text{k}$ **Ans**

$+\uparrow \Sigma F_y = 0; \quad -6\ \text{k} + 30\ \text{k} - 36\ \text{k} + D_y = 0$

$D_y = 12\ \text{k}$ **Ans**

www.e-kitabi.com

© 2009 by R.C. Hibbeler. Published by Pearson Prentice Hall, Pearson Education, Inc., Upper Saddle River, NJ. All rights reserved. This material is protected under all copyright laws as they currently exist. No portion of this material may be reproduced, in any form or by any means, without permission in writing from the publisher.

***2–36.** Determine the reactions at the supports for the compound beam. There are pins at A, E, and F.

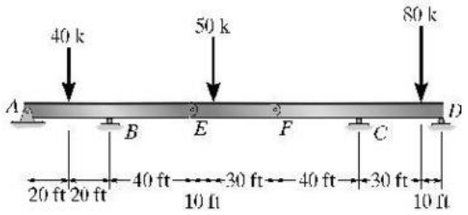

Member DF :

$\overset{+}{\rightarrow}\Sigma F_x = 0;$ $\quad F_x = 0$

Member EF :

$\overset{+}{\rightarrow}\Sigma F_x = 0;$ $\quad E_x = 0$

$(+\Sigma M_F = 0;$ $\quad 50(30) - E_y(40) = 0$

$E_y = 37.5\ \text{k}$

$+\uparrow \Sigma F_y = 0;$ $\quad 37.5 + F_y - 50 = 0$

$F_y = 12.50\ \text{k}$

Member DF :

$(+\Sigma M_D = 0;$ $\quad 80(10) - C_y(40) + 12.50(80) = 0$

$C_y = 45.0\ \text{k}$ **Ans**

$+\uparrow \Sigma F_y = 0;$ $\quad -12.50 + 45.0 + D_y - 80 = 0$

$D_y = 47.5\ \text{k}$ **Ans**

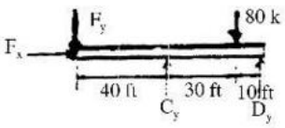

Member AE :

$(+\Sigma M_A = 0;$ $\quad -40(20) + B_y(40) - 37.5(80) = 0$

$B_y = 95.0\ \text{k}$ **Ans**

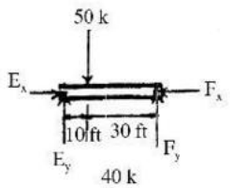

$\overset{+}{\rightarrow}\Sigma F_x = 0;$ $\quad A_x = 0$ **Ans**

$+\uparrow \Sigma F_y = 0;$ $\quad -A_y + 95.0 - 40 - 37.5 = 0$

$A_y = 17.5\ \text{k}$ **Ans**

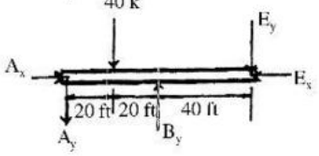

2–37. The construction features of a cantilever truss bridge are shown in the figure. Here it can be seen that the center truss CD is suspended by the cantilever arms ABC and DEF. C and D are pins. Determine the vertical reactions at the supports A, B, E, and F if a 15-k load is applied to the center truss.

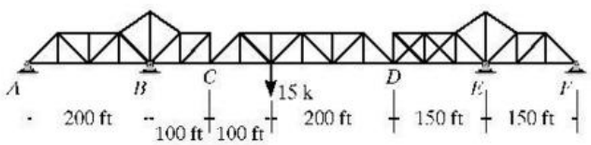

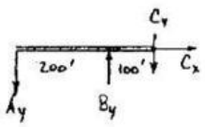

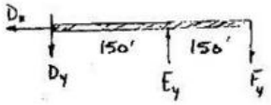

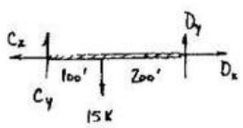

Truss ABC :

$(+\Sigma M_A = 0;$ $\quad B_y(200) - 10(300) = 0$

$B_y = 15.0\ \text{k}$ **Ans**

$+\uparrow \Sigma F_y = 0;$ $\quad 15 - 10 - A_y = 0$

$A_y = 5.0\ \text{k}$ **Ans**

Truss DEF :

$(+\Sigma M_F = 0;$ $\quad 5(300) - E_y(150) = 0$

$E_y = 10.0\ \text{k}$ **Ans**

$+\uparrow \Sigma F_y = 0;$ $\quad -5 + 10 - F_y = 0$

$F_y = 5.0\ \text{k}$ **Ans**

Truss CD :

$(+\Sigma M_D = 0;$ $\quad 15(200) - C_y(300) = 0$

$C_y = 10.0\ \text{k}$

$+\uparrow \Sigma F_y = 0;$ $\quad -15 + 10 + D_y = 0$

$D_y = 5.0\ \text{k}$

www.e-kitabi.com

© 2009 by R.C. Hibbeler. Published by Pearson Prentice Hall, Pearson Education, Inc., Upper Saddle River, NJ. All rights reserved. This material is protected under all copyright laws as they currently exist. No portion of this material may be reproduced, in any form or by any means, without permission in writing from the publisher.

***2–38.** Determine the reactions at the supports A, C, and D.

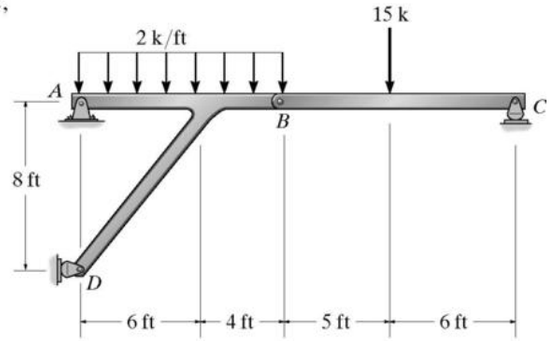

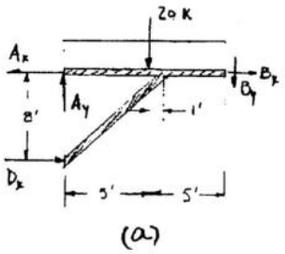

(a)

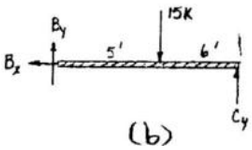

(b)

From FBD(b):

$\zeta + \Sigma M_B = 0$: $C_y(11) - 15(5) = 0$

$C_y = 6.82$ k **Ans**

$+\uparrow \Sigma F_y = 0$: $B_y + 6.818 - 15 = 0$

$B_y = 8.182$ k

$\overset{+}{\rightarrow} \Sigma F_x = 0$: $B_x = 0$

From FBD(a):

$\zeta + \Sigma M_A = 0$: $D_x(8) - 8.182(10) - 20(5) = 0$

$D_x = 22.7$ k **Ans**

$+\uparrow \Sigma F_y = 0$: $A_y - 20 - 8.182 = 0$

$A_y = 28.2$ k **Ans**

$\overset{+}{\leftarrow} \Sigma F_x = 0$: $A_x - 22.73 = 0$

$A_x = 22.73 = 22.7$ k **Ans**

2–39. Determine the reactions at the supports A and C. Assume the support at A is a roller, B is a fixed-connected joint, and C is a pin.

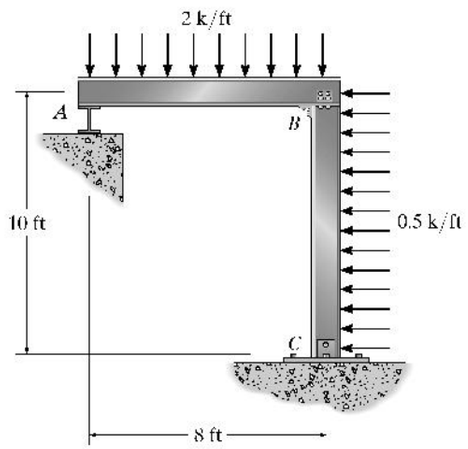

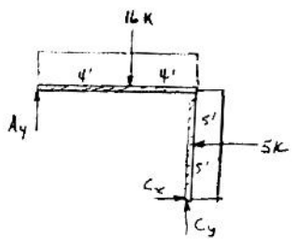

$\zeta + \Sigma M_C = 0$: $5(5) + 16(4) - A_y(8) = 0$

$A_y = 11.125 = 11.1$ k **Ans**

$+\uparrow \Sigma F_y = 0$: $11.125 - 16 + C_y = 0$

$C_y = 4.875 = 4.88$ k **Ans**

$\overset{+}{\rightarrow} \Sigma F_x = 0$: $-5 + C_x = 0$

$C_x = 5.00$ k **Ans**

www.e-kitabi.com

© 2009 by R.C. Hibbeler. Published by Pearson Prentice Hall, Pearson Education, Inc., Upper Saddle River, NJ. All rights reserved. This material is protected under all copyright laws as they currently exist. No portion of this material may be reproduced, in any form or by any means, without permission in writing from the publisher.

***2–40.** Determine the reactions at the supports A and B. Assume the support at B is a roller. C is a fixed-connected joint.

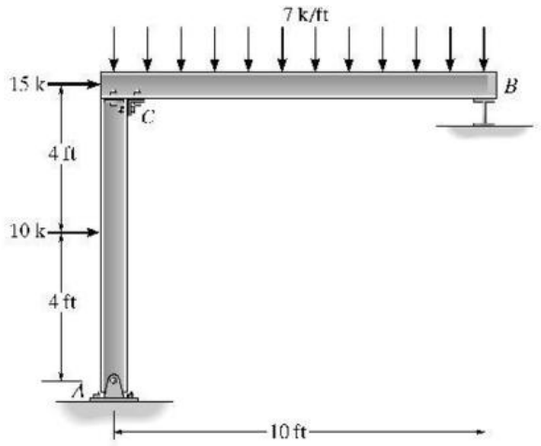

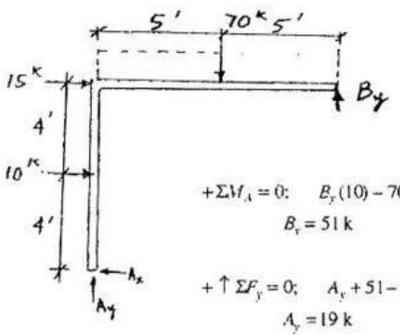

$+\Sigma M_A = 0;\quad B_y(10) - 70(5) - 10(4) - 15(8) = 0$

$B_y = 51\text{ k}$ **Ans.**

$+\uparrow \Sigma F_y = 0;\quad A_y + 51 - 70 = 0$

$A_y = 19\text{ k}$ **Ans.**

$+\leftarrow \Sigma F_x = 0;\quad A_x - 10 - 15 = 0$

$A_x = 25\text{ k}$ **Ans.**

2–41. Determine the reactions at the supports A and B.

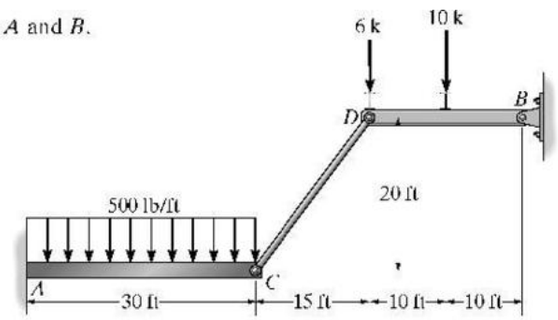

Member DB :

$\left(+\Sigma M_B = 0;\right.\quad F_{DC}\left(\frac{4}{5}\right)(20) - 6(20) - 10(10) = 0;\quad F_{DC} = 13.75\text{ k}$

$\pm \Sigma F_x = 0;\quad -B_x + 13.75\left(\frac{3}{5}\right) = 0;$

$B_x = 8.25\text{ k}$ **Ans**

$+\uparrow \Sigma F_y = 0;\quad B_y - 16 + 13.75\left(\frac{4}{5}\right) = 0;$

$B_y = 5\text{ k}$ **Ans**

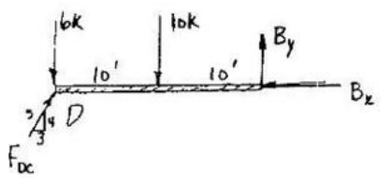

Member AC :

$\left(+\Sigma M_A = 0;\right.\quad 13.75\left(\frac{4}{5}\right)(30) + 15(15) - M_A = 0$

$M_A = 555\text{ k}\cdot\text{ft}$ **Ans**

$\pm \Sigma F_x = 0;\quad A_x - 13.75\left(\frac{3}{5}\right) = 0$

$A_x = 8.25\text{ k}$ **Ans**

$+\uparrow \Sigma F_y = 0;\quad A_y - 15 - 13.75\left(\frac{4}{5}\right) = 0$

$A_y = 26.0\text{ k}$ **Ans**

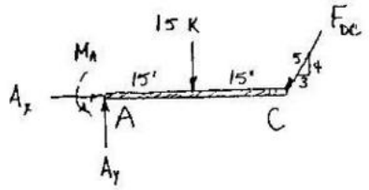

www.e-kitabi.com

c02.qxd 6/24/08 2:19 PM Page 34

© 2009 by R.C. Hibbeler. Published by Pearson Prentice Hall, Pearson Education, Inc., Upper Saddle River, NJ. All rights reserved. This material is protected under all copyright laws as they currently exist. No portion of this material may be reproduced, in any form or by any means, without permission in writing from the publisher.

2–42. The bridge frame consists of three segments which can be considered pinned at A, D, and E, rocker supported at C and F, and roller supported at B. Determine the horizontal and vertical components of reaction at all these supports due to the loading shown.

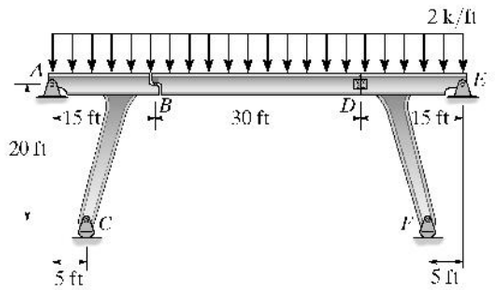

For segment BD :

$\zeta + \Sigma M_D = 0;\quad 2(30)(15) - B_y(30) = 0 \quad B_y = 30 \text{ kip}$ **Ans**

$\rightarrow \Sigma F_x = 0;\quad D_x = 0.$ **Ans**

$+\uparrow \Sigma F_y = 0;\quad D_y + 30 - 2(30) = 0 \quad D_y = 30 \text{ kip}$ **Ans**

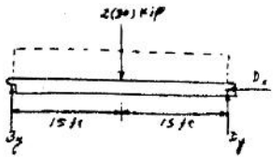

For segment ABC :

$\zeta + \Sigma M_A = 0;\quad C_y(5) - 2(15)(7.5) - 30(15) = 0 \quad C_y = 135 \text{ kip}$ **Ans**

$\rightarrow \Sigma F_x = 0;\quad A_x = 0$ **Ans**

$+\uparrow \Sigma F_y = 0;\quad -A_y + 135 - 2(15) - 30 = 0 \quad A_y = 75 \text{ kip}$ **Ans**

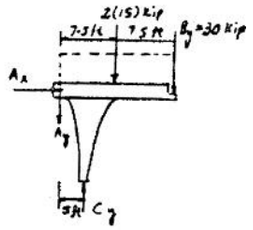

For segment DEF :

$\zeta + \Sigma M_E = 0;\quad -F_y(5) + 2(15)(7.5) + 30(15) = 0 \quad F_y = 135 \text{ kip}$ **Ans**

$\rightarrow \Sigma F_x = 0;\quad E_x = 0$ **Ans**

$+\uparrow \Sigma F_y = 0;\quad -E_y + 135 - 2(15) - 30 = 0 \quad E_y = 75 \text{ kip}$ **Ans**

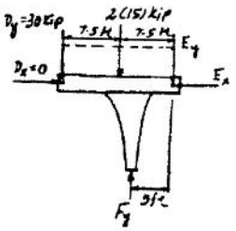

www.e-kitabi.com

c02.qxd 6/24/08 2:19 PM Page 35

© 2009 by R.C. Hibbeler. Published by Pearson Prentice Hall, Pearson Education, Inc., Upper Saddle River, NJ. All rights reserved. This material is protected under all copyright laws as they currently exist. No portion of this material may be reproduced, in any form or by any means, without permission in writing from the publisher.

2–43. Determine the horizontal and vertical components at A, B, and C. Assume the frame is pin connected at these points. The joints at D and E are fixed connected.

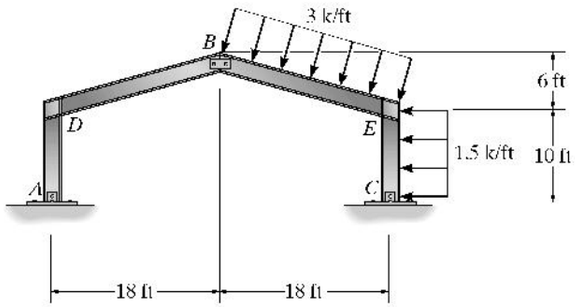

$$\curvearrowleft + \Sigma M_A = 0; \quad -18\text{ ft}\,(B_y) - 16\text{ ft}\,(B_x) = 0 \qquad (1)$$

$$\curvearrowleft + \Sigma M_C = 0; \quad 15\text{ k}\,(5\text{ ft}) + 9\text{ ft}\,(56.92\text{ k}\,(\cos 18.43°)) + 13\text{ ft}\,(56.92\text{ k}\,(\sin 18.43°))$$

$$-16\text{ ft}\,(B_x) - 18\text{ ft}\,(B_y) = 0 \qquad (2)$$

Solving Eq. 1 & 2

$B_x = 24.84$ k **Ans**

$B_y = 22.08$ k **Ans**

$\overset{+}{\rightarrow} \Sigma F_x = 0; \quad A_x + 24.84\text{ k} = 0$

$A_x = 24.84$ k

$+\uparrow \Sigma F_y = 0; \quad A_y - 22.08\text{ k} = 0$

$A_y = 22.08$ k

$\overset{+}{\rightarrow} \Sigma F_x = 0; \quad C_x - 15\text{ k} - \sin(18.43°)(56.92\text{ k}) + 24.84\text{ k}$

$C_x = 8.15$ k

$+\uparrow \Sigma F_y = 0; \quad C_y + 22.08\text{ k} - \cos(18.43°)(56.92\text{ k}) = 0$

$C_y = 31.92$ k

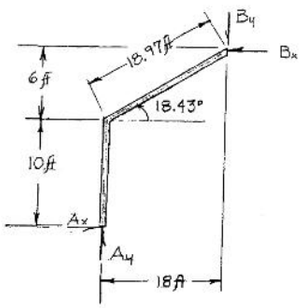

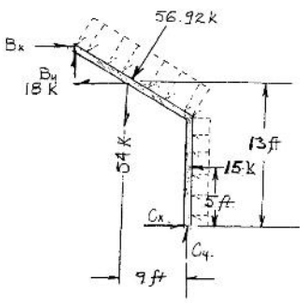

www.e-kitabi.com

© 2009 by R.C. Hibbeler. Published by Pearson Prentice Hall, Pearson Education, Inc., Upper Saddle River, NJ. All rights reserved. This material is protected under all copyright laws as they currently exist. No portion of this material may be reproduced, in any form or by any means, without permission in writing from the publisher.

***2–44.** Determine the reactions at the supports A and B. The joints C and D are fixed connected.

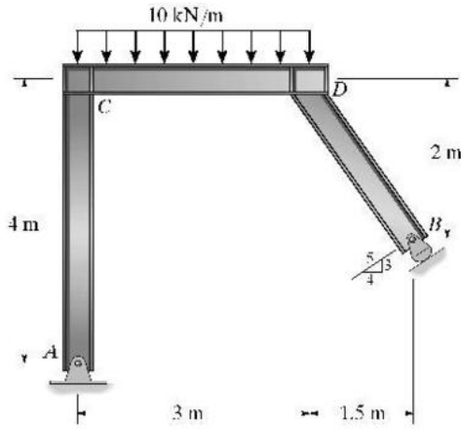

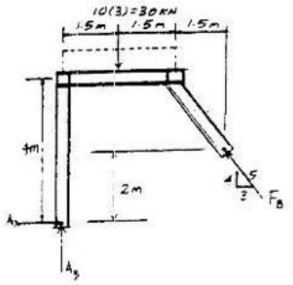

$$\left(+\Sigma M_A = 0;\ \frac{4}{5}F_B(4.5) + \frac{3}{5}F_B(2) - 30(1.5) = 0\right)$$

$$F_B = 9.375\ \text{kN} = 9.38\ \text{kN} \qquad \text{Ans}$$

$$+\uparrow \Sigma F_y = 0;\ A_y + \frac{4}{5}(9.375) - 30 = 0$$

$$A_y = 22.5\ \text{kN} \qquad \text{Ans}$$

$$\pm \Sigma F_x = 0;\ A_x - \frac{3}{5}(9.375) = 0$$

$$A_x = 5.63\ \text{kN} \qquad \text{Ans}$$

2–45. Determine the horizontal and vertical components of reaction at the supports A and B.

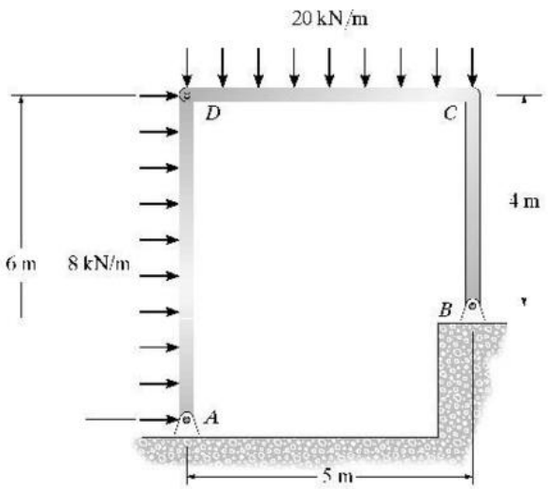

Member AD:

$$\left(+\Sigma M_A = 0;\right.$$

$$-48\ \text{kN}\ (3\ \text{m}) + D_x(6\ \text{m}) = 0$$

$$D_x = 24\ \text{kN}$$

$$\stackrel{+}{\rightarrow} \Sigma F_x = 0;\quad 48\ \text{kN} - 24\ \text{kN} - A_x = 0$$

$$A_x = 24\ \text{kN}$$

Member DCD:

$$\left(+\Sigma M_B = 0;\right.$$

$$100\ \text{kN}\ (2.5\ \text{m}) - 24\ \text{kN}\ (4\ \text{m}) + D_y(5\ \text{m}) = 0$$

$$D_y = 30.8\ \text{kN}$$

$$+\uparrow \Sigma F_y = 0;\quad 30.8\ \text{kN} - 100\ \text{kN} + B_y = 0$$

$$B_y = 69.2\ \text{kN}$$

$$\stackrel{+}{\rightarrow} \Sigma F_x = 0;\quad 24\ \text{kN} - B_x = 0$$

$$B_x = 24\ \text{kN}$$

Member AD:

$$+\uparrow \Sigma F_y = 0;\quad -30.8\ \text{kN} + A_y = 0$$

$$A_y = 30.8\ \text{kN}$$

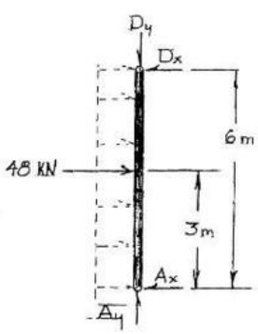

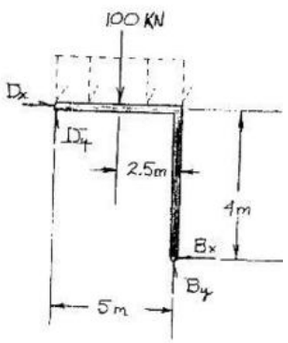

www.e-kitabi.com

c02.qxd 6/24/08 2:19 PM Page 37

© 2009 by R.C. Hibbeler. Published by Pearson Prentice Hall, Pearson Education, Inc., Upper Saddle River, NJ. All rights reserved. This material is protected under all copyright laws as they currently exist. No portion of this material may be reproduced, in any form or by any means, without permission in writing from the publisher.

2–46. Determine the reactions at the supports A and D. Assume A is fixed and B and C and D are pins.

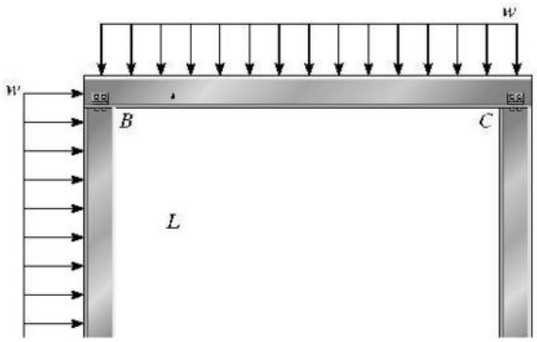

Member BC:

$(+\Sigma M_B = 0;\quad C_y(1.5L) - (1.5wL)(\frac{1.5L}{2}) = 0$

$C_y = 0.75\,wL$

$+\uparrow \Sigma F_y = 0;\quad B_y - 1.5wL + 0.75\,wL = 0$

$B_y = 0.75\,wL$

Member CD:

$(+\Sigma M_D = 0;\quad C_x = 0$

$\rightarrow \Sigma F_x = 0;\quad D_x = 0$ **Ans**

$+\uparrow \Sigma F_y = 0;\quad D_y - 0.75wL = 0$

$D_y = 0.75\,wL$ **Ans**

Member BC:

$\rightarrow \Sigma F_x = 0;\quad B_x - 0 = 0;\ B_x = 0$

Member AB:

$\rightarrow \Sigma F_x = 0;\quad wL - A_x = 0$

$A_x = wL$ **Ans**

$+\uparrow \Sigma F_y = 0;\quad A_y - 0.75\,wL = 0$

$A_y = 0.75\,wL$ **Ans**

$(+\Sigma M_A = 0;\quad M_A - wL(\frac{L}{2}) = 0$

$M_A = \frac{wL^2}{2}$ **Ans**

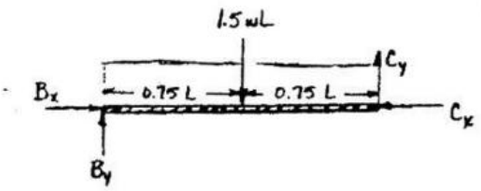

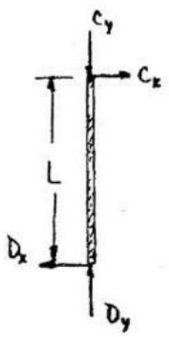

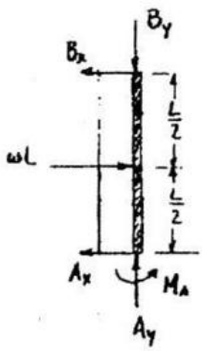

www.e-kitabi.com

c02.qxd 6/24/08 2:19 PM Page 38

© 2009 by R.C. Hibbeler. Published by Pearson Prentice Hall, Pearson Education, Inc., Upper Saddle River, NJ. All rights reserved. This material is protected under all copyright laws as they currently exist. No portion of this material may be reproduced, in any form or by any means, without permission in writing from the publisher.

2–47. Determine the reactions at the supports A and C. The frame is pin connected at A, B, and C and the two joints are fixed connected.

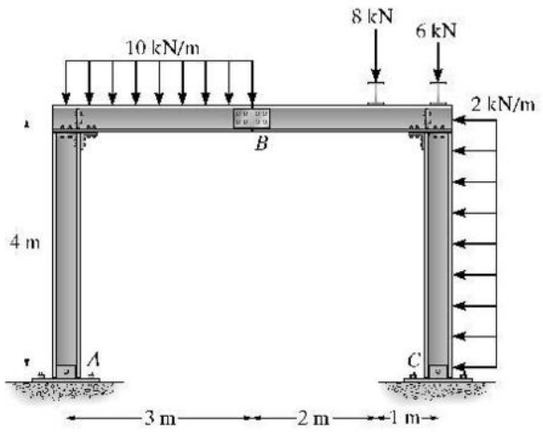

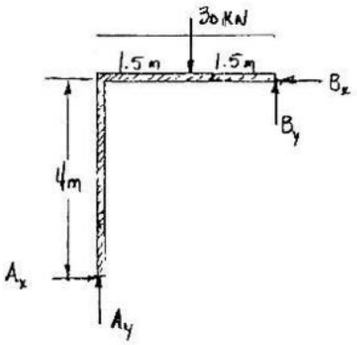

Member AB :

$(+\Sigma M_A = 0;$ $\quad B_x(4) + B_y(3) - 30(1.5) = 0$

$B_x(4) + B_y(3) = 45$ (1)

Member BC :

$(+\Sigma M_C = 0;$ $\quad -B_x(4) + B_y(3) + 8(2) + 8(1) = 0$

$-B_x(4) + B_y(3) = -24$ (2)

Solving Eqs. (1) and (2),

$B_x = 8.625$ kN, $\quad B_y = 3.5$ kN

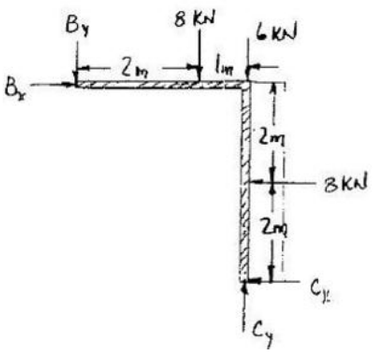

Member AB :

$\overset{+}{\rightarrow}\Sigma F_x = 0;$ $\quad A_x - 8.625 = 0$

$A_x = 8.62$ kN **Ans**

$+\uparrow \Sigma F_y = 0;$ $\quad A_y - 30 + 3.5 = 0$

$A_y = 26.5$ kN **Ans**

Member CB :

$\overset{+}{\rightarrow}\Sigma F_x = 0;$ $\quad -C_x - 8 + 8.625 = 0$

$C_x = 0.625$ kN **Ans**

$+\uparrow \Sigma F_y = 0;$ $\quad C_y - 6 - 8 - 3.5 = 0$

$C_y = 17.5$ kN **Ans**

www.e-kitabi.com

c02.qxd 6/24/08 2:19 PM Page 39

© 2009 by R.C. Hibbeler. Published by Pearson Prentice Hall, Pearson Education, Inc., Upper Saddle River, NJ. All rights reserved. This material is protected under all copyright laws as they currently exist. No portion of this material may be reproduced, in any form or by any means, without permission in writing from the publisher.

***2–48.** Determine the horizontal and vertical components of force at the connections A, B, and C. Assume each of these connections is a pin.

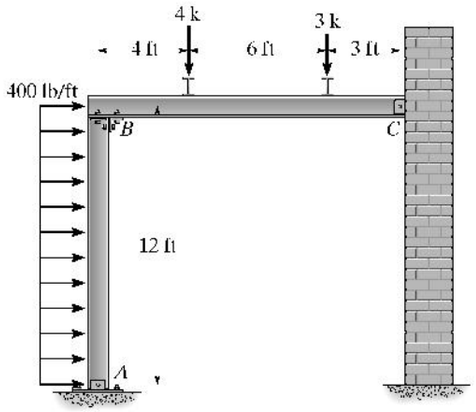

Member AB:

$(+\Sigma M_A = 0;$ $\quad B_x(12) - 4.8(6) = 0$

$B_x = 2.40$ k **Ans**

$\stackrel{+}{\leftarrow}\Sigma F_x = 0;$ $\quad A_x + 2.4 - 4.8 = 0$

$A_x = 2.40$ k **Ans**

$+\uparrow \Sigma F_y = 0;$ $\quad A_y - B_y = 0$ (1)

Member BC:

$(+\Sigma M_C = 0;$ $\quad -B_y(13) + 4(9) + 3(3) = 0$

$B_y = 3.46$ k **Ans**

$+\uparrow \Sigma F_y = 0;$ $\quad C_y + 3.462 - 4 - 3 = 0$

$C_y = 3.54$ k **Ans**

$\stackrel{+}{\leftarrow}\Sigma F_x = 0;$ $\quad C_x - 2.40 = 0$

$C_x = 2.40$ k **Ans**

From Eq. (1),

$A_y = 3.46$ k **Ans**

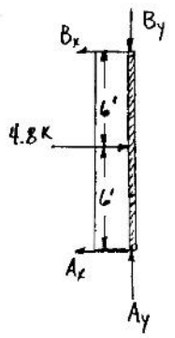

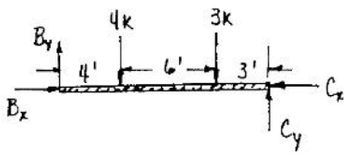

www.e-kitabi.com

c02.qxd 6/24/08 2:19 PM Page 40

© 2009 by R.C. Hibbeler. Published by Pearson Prentice Hall, Pearson Education, Inc., Upper Saddle River, NJ. All rights reserved. This material is protected under all copyright laws as they currently exist. No portion of this material may be reproduced, in any form or by any means, without permission in writing from the publisher.

2–49. Determine the horizontal and vertical reactions at the connections A and C of the gable frame. Assume that A, B, and C are pin connections. The purlin loads such as D and E are applied perpendicular to the center line of each girder.

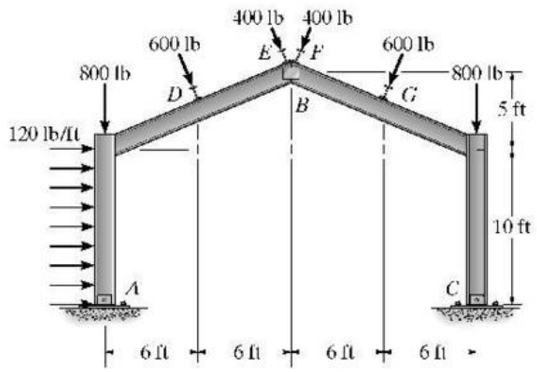

Member AB :

$$(+\Sigma M_A = 0; \quad B_x(15) + B_y(12) - (1200)(5) - 600\left(\frac{12}{13}\right)(6) - 600\left(\frac{5}{13}\right)(12.5)$$
$$-400\left(\frac{12}{13}\right)(12) - 400\left(\frac{5}{13}\right)(15) = 0$$
$$B_x(15) + B_y(12) = 18{,}946.154 \qquad (1)$$

Member BC :

$$(+\Sigma M_C = 0; \quad -B_x(15) + B_y(12) + 600\left(\frac{12}{13}\right)(6) + 600\left(\frac{5}{13}\right)(12.5)$$
$$400\left(\frac{12}{13}\right)(12) + 400\left(\frac{5}{13}\right)(15) = 0$$
$$B_x(15) - B_y(12) = 12{,}446.15 \qquad (2)$$

Solving Eqs. (1) and (2),

$$B_x = 1063.08 \text{ lb}, \qquad B_y = 250.0 \text{ lb}$$

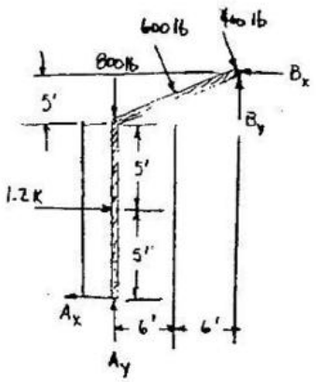

Member AB :

$$\rightarrow \Sigma F_x = 0; \quad -A_x + 1200 + 1000\left(\frac{5}{13}\right) - 1063.08 = 0$$
$$A_x = 522 \text{ lb} \qquad \textbf{Ans}$$
$$+\uparrow \Sigma F_y = 0; \quad A_y - 800 - 1000\left(\frac{12}{13}\right) + 250 = 0$$
$$A_y = 1473 \text{ lb} \qquad \textbf{Ans}$$

Member BC :

$$\rightarrow \Sigma F_x = 0; \quad -C_x - 1000\left(\frac{5}{13}\right) + 1063.08 = 0$$
$$C_x = 678 \text{ lb} \qquad \textbf{Ans}$$
$$+\uparrow \Sigma F_y = 0; \quad C_y - 800 - 1000\left(\frac{12}{13}\right) - 250.0 = 0$$
$$C_y = 1973 \text{ lb} \qquad \textbf{Ans}$$

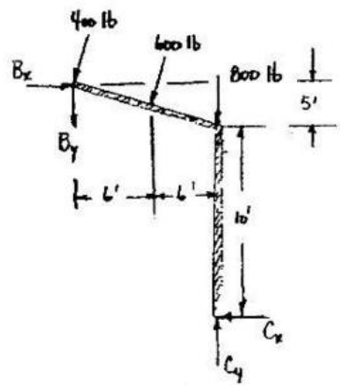

www.e-kitabi.com

c02.qxd 6/24/08 2:19 PM Page 41

© 2009 by R.C. Hibbeler. Published by Pearson Prentice Hall, Pearson Education, Inc., Upper Saddle River, NJ. All rights reserved. This material is protected under all copyright laws as they currently exist. No portion of this material may be reproduced, in any form or by any means, without permission in writing from the publisher.

2–50. Determine the horizontal and vertical components of reaction at the supports A, B, and C. Assume the frame is pin connected at A, B, D, E, and F, and there is a fixed connected joint at C.

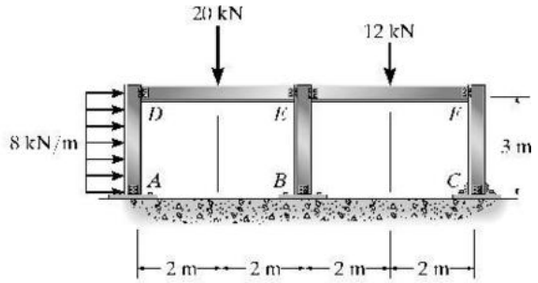

Member AD:

$(+\Sigma M_A = 0;\quad -24(1.5) + D_x(3) = 0$

$D_x = 12$ kN

$\rightarrow \Sigma F_x = 0;\quad -12 + 24 - A_x = 0$

$A_x = 12$ kN **Ans**

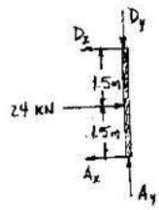

Member DE:

$(+\Sigma M_E = 0;\quad 20(2) - D_y(4) = 0$

$D_y = 10$ kN

$+\uparrow \Sigma F_y = 0;\quad E_y - 20 + 10 = 0$

$E_y = 10$ kN

$\rightarrow \Sigma F_x = 0;\quad -E_x + 12 = 0$

$E_x = 12$ kN

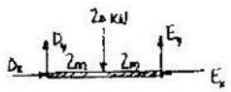

Member AD:

$+\uparrow \Sigma F_y = 0;\quad A_y - 10 = 0$

$A_y = 10$ kN **Ans**

Member EF:

$(+\Sigma M_E = 0;\quad -12(2) + F_y(4) = 0$

$F_y = 6$ kN

$+\uparrow \Sigma F_y = 0;\quad E_y' - 12 + 6 = 0$

$E_y' = 6$ kN

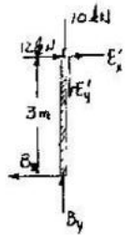

Member BE:

$+\uparrow \Sigma F_y = 0;\quad B_y - 10 - 6 = 0$

$B_y = 16$ kN **Ans**

$(+\Sigma M_B = 0;\quad -12(3) + E_x'(3) = 0$

$E_x' = 12$ kN

$\rightarrow \Sigma F_x = 0;\quad -B_x + 12 - 12 = 0$

$B_x = 0$ **Ans**

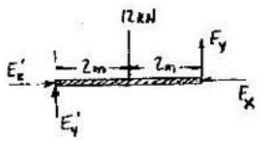

Member EF:

$\rightarrow \Sigma F_x = 0;\quad 12 - F_x = 0;$

$F_x = 12$ kN

Member FC:

$\rightarrow \Sigma F_x = 0;\quad 12 - C_x = 0;$

$C_x = 12$ kN **Ans**

$+\uparrow \Sigma F_y = 0;\quad C_y - 6 = 0$

$C_y = 6$ kN **Ans**

$(+\Sigma M_C = 0;\quad M_C - 12(3) = 0$

$M_C = 36$ kN·m **Ans**

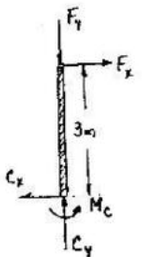

www.e-kitabi.com

c02.qxd 6/24/08 2:20 PM Page 42

© 2009 by R.C. Hibbeler. Published by Pearson Prentice Hall, Pearson Education, Inc., Upper Saddle River, NJ. All rights reserved. This material is protected under all copyright laws as they currently exist. No portion of this material may be reproduced, in any form or by any means, without permission in writing from the publisher.

2–1P. The railroad trestle bridge shown in the photo is supported by reinforced concrete bents. Assume the two simply supported side girders, track bed, and two rails have a weight of 0.5 k/ft and the load imposed by a train is 7.2 k/ft (see Fig. 1–11). Each girder is 20 ft long. Apply the load over the entire bridge and determine the compressive force in the columns of each bent. For the analysis assume all joints are pin connected and neglect the weight of the bent. Are these realistic assumptions?

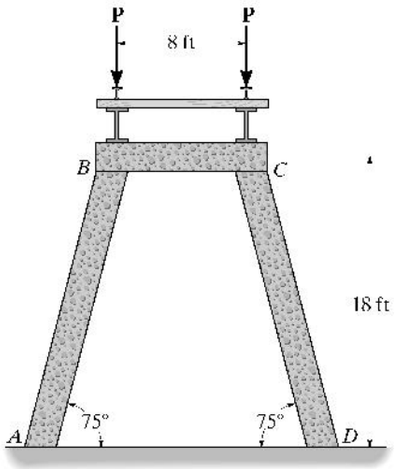

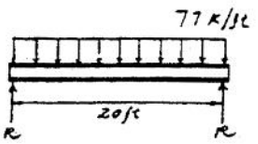

Maximum reactions occur when the live load is over entire span.

Load = 7.2 + 0.5 = 7.7 k / ft

$R = 7.7(10) = 77$ k

Then $P = \dfrac{2(77)}{2} = 77$ k

All members are two - force members.

$\left(+\Sigma M_B = 0;\ -77(8) + F \sin 75°(8) = 0\right.$

$F = 79.7$ k Ans

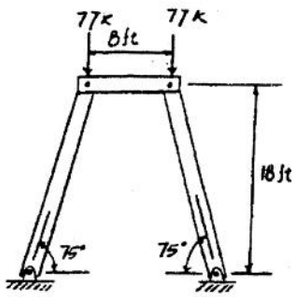

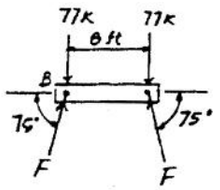

It is not reasonable to assume the members are pin connected since such a framework is unstable. Ans

www.e-kitabi.com

c03.qxd 6/24/08 2:56 PM Page 43

© 2009 by R.C. Hibbeler. Published by Pearson Prentice Hall, Pearson Education, Inc., Upper Saddle River, NJ. All rights reserved. This material is protected under all copyright laws as they currently exist. No portion of this material may be reproduced, in any form or by any means, without permission in writing from the publisher.

3–1. Classify each of the following trusses as stable, unstable, statically determinate, or statically indeterminate. If indeterminate state its degree. All members are pin connected at their ends.

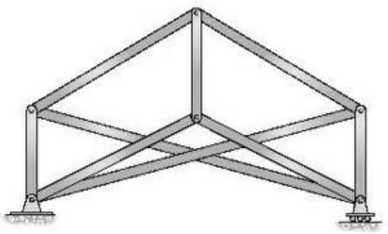

(a)

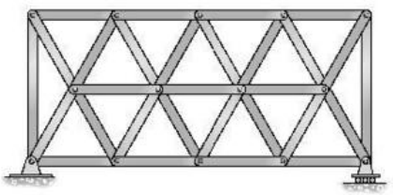

(b)

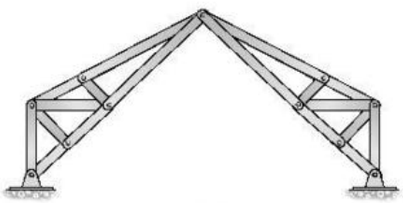

(c)

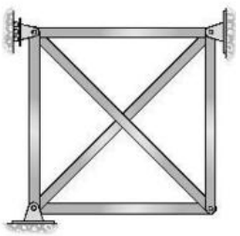

(d)

(a) $b = 9 \quad r = 3 \quad j = 6$

$b + r = 2j$

$12 = 12$

Statically determinate **Ans**

(b) $b = 29 \quad r = 3 \quad j = 14$

$b + r > 2j$

$32 > 28$

Indeterminate to 4° **Ans**

(c) $b = 18 \quad r = 4 \quad j = 11$

$b + r = 2j$

$22 = 22$

Statically determinate **Ans**

(d) $b = 6 \quad r = 5 \quad j = 4$

$b + r > 2j$

$11 > 8$

Indeterminate to 3° **Ans**

3–2. Classify each of the following trusses as statically determinate, statically indeterminate, or unstable. If indeterminate, state its degree.

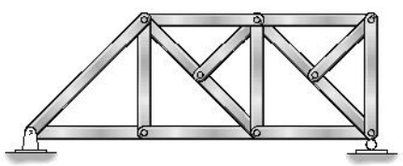

(a)

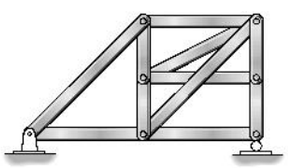

(b)

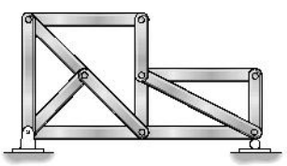

(c)

(a) $r = 3$

$b = 15$

$j = 9$

$3 + 15 = 9(2)$

Statically determinate. **Ans**

(b) $r = 3$

$b = 11$

$j = 7$

$3 + 11 = 7(2)$

Statically determinate. **Ans**

(c) $r = 3$

$b = 12$

$j = 8$

$3 + 12 < 8(2)$

$15 < 16$

Unstable. **Ans**

www.e-kitabi.com

c03.qxd 6/24/08 2:56 PM Page 44

© 2009 by R.C. Hibbeler. Published by Pearson Prentice Hall, Pearson Education, Inc., Upper Saddle River, NJ. All rights reserved. This material is protected under all copyright laws as they currently exist. No portion of this material may be reproduced, in any form or by any means, without permission in writing from the publisher.

3–3. Classify each of the following trusses as statistically determinate, indeterminate, or unstable. If indeterminate, state its degree.

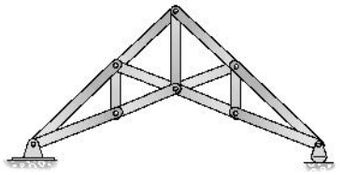

(a)

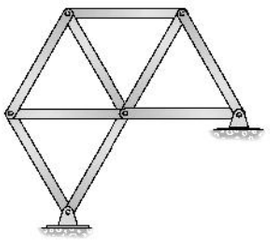

(b)

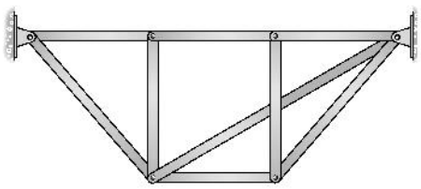

(c)

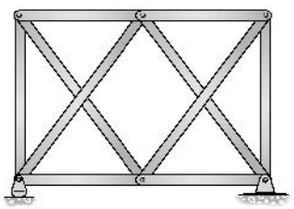

(d)

(a) $b = 13 \quad r = 3 \quad j = 8$

$b + r = 2j$

$16 = 16$

Statically determinate **Ans**

(b) $b = 9 \quad r = 4 \quad j = 6$

$b + r = 2j$

$12 = 12$

Statically indeterminate to 1° **Ans**

(c) $b = 9 \quad r = 4 \quad j = 6$

$b + r > 2j$

$13 > 12$

Statically indeterminate to 1° **Ans**

(d) $b = 10 \quad r = 3 \quad j = 6$

$b + r > 2j$

$13 > 12$

Statically indeterminate to 1° **Ans**

www.e-kitabi.com

c03.qxd 6/24/08 2:56 PM Page 45

© 2009 by R.C. Hibbeler. Published by Pearson Prentice Hall, Pearson Education, Inc., Upper Saddle River, NJ. All rights reserved. This material is protected under all copyright laws as they currently exist. No portion of this material may be reproduced, in any form or by any means, without permission in writing from the publisher.

***3–4.** Determine the force in each member of the truss. State if the members are in tension or compression.

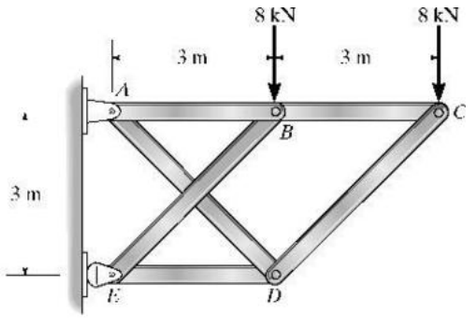

Joint C:

$+\uparrow \Sigma F_y = 0; \quad -8\text{ kN} - F_{CD}\sin 45^\circ = 0$

$F_{CD} = 11.3137\text{ kN} = 11.3\text{ kN (C)}$ **Ans**

$\overset{+}{\rightarrow} \Sigma F_x = 0; \quad 11.3137\text{ kN}(\cos 45^\circ) - F_{CB} = 0$

$F_{CB} = 8\text{ kN (T)}$ **Ans**

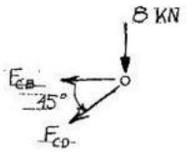

Joint D:

$+\uparrow \Sigma F_y = 0; \quad -11.3137\text{ kN}(\sin 45^\circ) - F_{DA}\sin 45^\circ = 0$

$F_{DA} = 11.3137\text{ kN} = 11.3\text{ kN (T)}$ **Ans**

$\overset{+}{\rightarrow} \Sigma F_x = 0; \quad -11.3137\text{ kN}(\cos 45^\circ) - 11.3137\text{ kN}(\cos 45^\circ) - F_{DE} = 0$

$F_{DE} = 16\text{ kN (C)}$ **Ans**

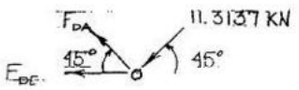

Joint B:

$+\uparrow \Sigma F_y = 0; \quad -8\text{ kN} + F_{BE}\sin 45^\circ = 0$

$F_{BE} = 11.3137\text{ kN} = 11.3\text{ kN (C)}$ **Ans**

$\overset{+}{\rightarrow} \Sigma F_x = 0; \quad 8\text{ kN} + 11.3137\text{ kN}(\cos 45^\circ) - F_{BA} = 0$

$F_{BA} = 24\text{ kN (T)}$ **Ans**

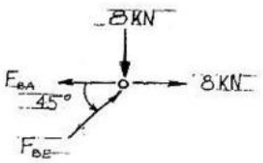

Joint A:

$\overset{+}{\rightarrow} \Sigma F_x = 0; \quad 16\text{ kN} + 11.3137\text{ kN}(\cos 45^\circ) + A_x = 0$

$A_x = 16\text{ kN}$ **Ans**

$+\uparrow \Sigma F_y = 0; \quad -A_y - 11.3137\text{ kN}(\sin 45^\circ) = 0$

$A_y = 8\text{ kN}$ **Ans**

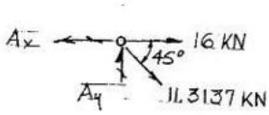

www.e-kitabi.com

c03.qxd 6/24/08 2:56 PM Page 46

© 2009 by R.C. Hibbeler. Published by Pearson Prentice Hall, Pearson Education, Inc., Upper Saddle River, NJ. All rights reserved. This material is protected under all copyright laws as they currently exist. No portion of this material may be reproduced, in any form or by any means, without permission in writing from the publisher.

3–5. Determine the force in each member of the truss. State whether the members are in tension or compression. Set $P = 8$ kN.

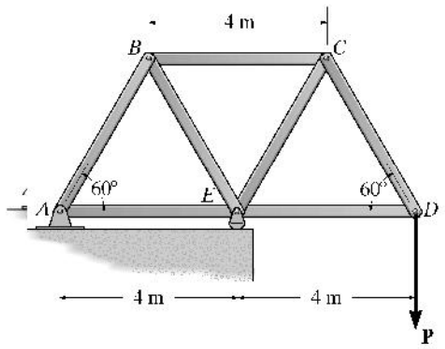

Method of Joints : In this case, the support reactions are not required for determining the member forces.

Joint *D*

$+\uparrow \Sigma F_y = 0;\quad F_{DC}\sin 60° - 8 = 0$

$F_{DC} = 9.238 \text{ kN (T)} = 9.24 \text{ kN (T)}$ **Ans**

$\overset{+}{\rightarrow} \Sigma F_x = 0;\quad F_{DE} - 9.238\cos 60° = 0$

$F_{DE} = 4.619 \text{ kN (C)} = 4.62 \text{ kN (C)}$ **Ans**

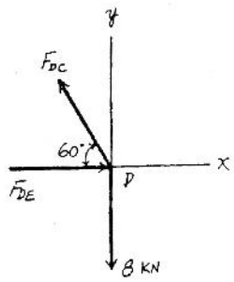

Joint *C*

$+\uparrow \Sigma F_y = 0;\quad F_{CE}\sin 60° - 9.238\sin 60° = 0$

$F_{CE} = 9.238 \text{ kN (C)} = 9.24 \text{ kN (C)}$ **Ans**

$\overset{+}{\rightarrow} \Sigma F_x = 0;\quad 2(9.238\cos 60°) - F_{CB} = 0$

$F_{CB} = 9.238 \text{ kN (T)} = 9.24 \text{ kN (T)}$ **Ans**

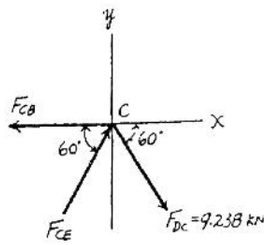

Joint *B*

$+\uparrow \Sigma F_y = 0;\quad F_{BE}\sin 60° - F_{BA}\sin 60° = 0$

$F_{BE} = F_{BA} = F$

$\overset{+}{\rightarrow} \Sigma F_x = 0;\quad 9.238 - 2F\cos 60° = 0$

$F = 9.238 \text{ kN}$

Thus, $F_{BE} = 9.24 \text{ kN (C)}$ $F_{BA} = 9.24 \text{ kN (T)}$ **Ans**

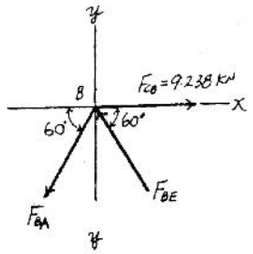

Joint *E*

$+\uparrow \Sigma F_y = 0;\quad E_y - 2(9.238\sin 60°) = 0 \quad E_y = 16.0 \text{ kN}$

$\overset{+}{\rightarrow} \Sigma F_x = 0;\quad F_{EA} + 9.238\cos 60° - 9.238\cos 60° - 4.619 = 0$

$F_{EA} = 4.62 \text{ kN (C)}$ **Ans**

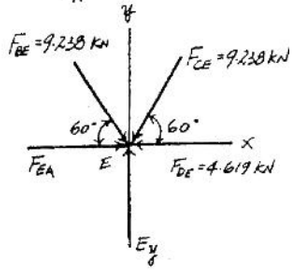

Note : The support reactions A_x and A_y can be determined by analyzing Joint *A* using the results obtained above.

www.e-kitabi.com

c03.qxd 6/24/08 2:56 PM Page 47

© 2009 by R.C. Hibbeler. Published by Pearson Prentice Hall, Pearson Education, Inc., Upper Saddle River, NJ. All rights reserved. This material is protected under all copyright laws as they currently exist. No portion of this material may be reproduced, in any form or by any means, without permission in writing from the publisher.

3–6. The truss shown is used to support the floor deck. The uniform load on the deck is 2.5 k/ft. This load is transferred from the deck to the floor beams, which rest on the top joints of the truss. Determine the force in each member of the truss, and state if the members are in tension or compression. Assume all members are pin connected.

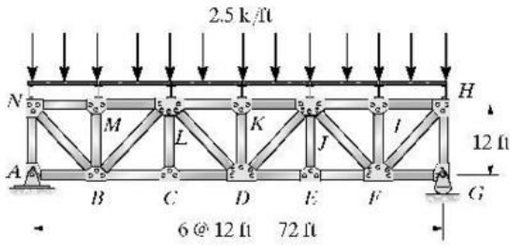

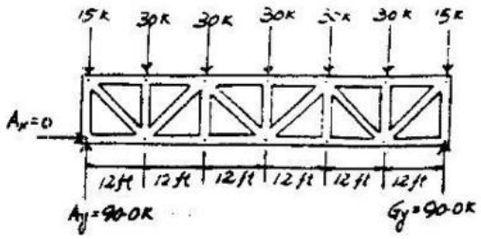

Reactions :

$A_x = 0$, $A_y = 90.0$ k, $G_y = 90.0$ k

Joint A :

$\overset{+}{\rightarrow} \Sigma F_x = 0$; $F_{AB} = 0$ **Ans**

$+\uparrow \Sigma F_y = 0$; $90.0 - F_{AN} = 0$; $F_{AN} = 90.0$ k (C) **Ans**

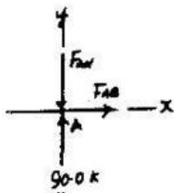

Joint N :

$+\uparrow \Sigma F_y = 0$; $90.0 - 15 - F_{NB}(\sin 45°) = 0$

$F_{NB} = 106.1 = 106$ k (T) **Ans**

$\overset{+}{\rightarrow} \Sigma F_x = 0$; $-106.1(\cos 45°) - F_{NM} = 0$

$F_{NM} = 75.0$ k (C) **Ans**

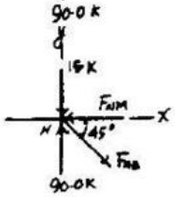

Joint M :

$\overset{+}{\rightarrow} \Sigma F_x = 0$; $75.0 - F_{ML} = 0$; $F_{ML} = 75.0$ k (C) **Ans**

$+\uparrow \Sigma F_y = 0$; $F_{MB} - 30 = 0$; $F_{MB} = 30.0$ k (C) **Ans**

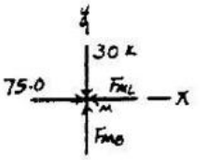

Joint B :

$+\uparrow \Sigma F_y = 0$; $-F_{BL}\sin 45° + 106.1\sin 45° - 30.0 = 0$

$F_{BL} = 63.64$ k $= 63.6$ k (C) **Ans**

$\overset{+}{\rightarrow} \Sigma F_x = 0$; $F_{BC} - 63.64\cos 45° - 106.1\cos 45° = 0$

$F_{BC} = 120$ k (T) **Ans**

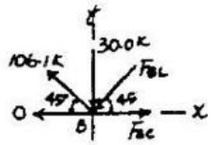

Joint C :

$\overset{+}{\rightarrow} \Sigma F_x = 0$; $F_{CD} - 120 = 0$; $F_{CD} = 120$ k (T) **Ans**

$+\uparrow \Sigma F_y = 0$; $F_{CL} = 0$ **Ans**

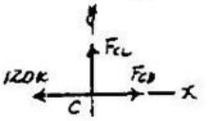

Joint L :

$+\uparrow \Sigma F_y = 0$; $-F_{LD}\sin 45° + 63.64\sin 45° - 30 = 0$

$F_{LD} = 21.21$ k $= 21.2$ k (T) **Ans**

$\overset{+}{\rightarrow} \Sigma F_x = 0$; $-F_{LK} + 75.0 + 63.64\cos 45° + 21.21\cos 45° = 0$

$F_{LK} = 135$ k (C) **Ans**

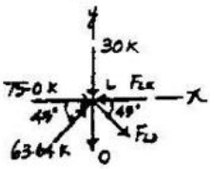

Joint K :

$+\uparrow \Sigma F_y = 0$; $F_{KD} - 30 = 0$;

$F_{KD} = 30.0$ k (C) **Ans**

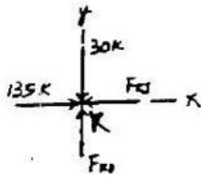

Due to symmetrical loading and geometry

$F_{GH} = 90.0$ k (C)	$F_{FG} = 0$	**Ans**
$F_{HF} = 106$ k (T)	$F_{HI} = 75.0$ k (C)	**Ans**
$F_{IJ} = 75.0$ k (C)	$F_{IF} = 30.0$ k (C)	**Ans**
$F_{FJ} = 63.6$ k (C)	$F_{EF} = 120$ k (T)	**Ans**
$F_{DE} = 120$ k (T)	$F_{JE} = 0$	**Ans**
$F_{JD} = 21.2$ k (T)	$F_{KJ} = 135$ k (C)	**Ans**

www.e-kitabi.com

c03.qxd 6/24/08 2:56 PM Page 48

© 2009 by R.C. Hibbeler. Published by Pearson Prentice Hall, Pearson Education, Inc., Upper Saddle River, NJ. All rights reserved. This material is protected under all copyright laws as they currently exist. No portion of this material may be reproduced, in any form or by any means, without permission in writing from the publisher.

3–7. Determine the force in each member of the truss. State if the members are in tension or compression.

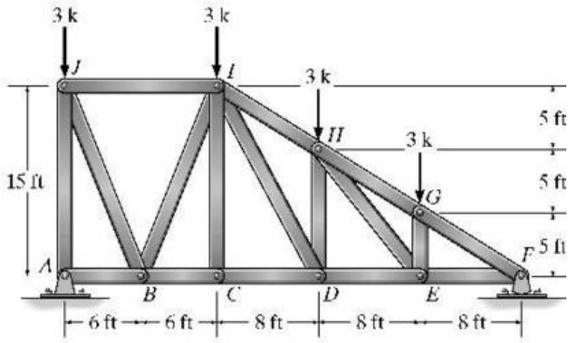

Joint A

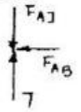

$\rightarrow +\Sigma F_x = 0;\ F_{AB} = 0$ **Ans**

$\uparrow +\Sigma F_y = 0;\ F_{AJ} = 7.00\text{ k (C)}$ **Ans**

Joint J

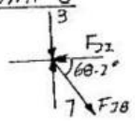

$\uparrow +\Sigma F_y = 0;\ F_{JB}\sin 68.2° + 3 - 7 = 0 \quad F_{JB} = 4.31\text{ k (T)}$ **Ans**

$\rightarrow +\Sigma F_x = 0;\ F_{JI} - 4.308\cos 68.2° = 0 \quad F_{JI} = 1.60\text{ k (C)}$ **Ans**

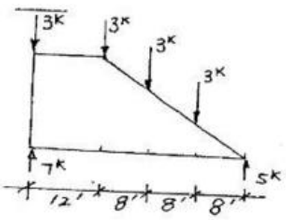

Joint B

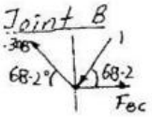

$\uparrow +\Sigma F_y = 0;\quad F_{BI} = 4.31\text{ k (C)}$ **Ans**

$\rightarrow +\Sigma F_x = 0;\ F_{BC} - 2(4.308\cos 68.2°) = 0 \quad F_{BC} = 3.20\text{ k (T)}$ **Ans**

Joint C

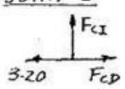

$\uparrow +\Sigma F_y = 0;\quad F_{CI} = 0$ **Ans**

$\rightarrow +\Sigma F_x = 0;\ F_{CD} - 3.20 = 0 \quad F_{CD} = 3.20\text{ k (T)}$ **Ans**

Joint F

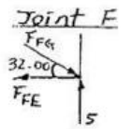

$\uparrow +\Sigma F_y = 0;\ -F_{FG}\sin 32.0° + 5 = 0 \quad F_{FG} = 9.43\text{ k (C)}$ **Ans**

$\rightarrow +\Sigma F_x = 0;\ -F_{FE} + 9.435\cos 32.0° = 0 \quad F_{FE} = 8.00\text{ k (T)}$ **Ans**

Joint G

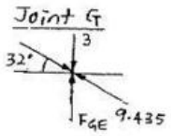

$\rightarrow +\Sigma F_x = 0;\ F_{HG} = 9.43\text{ k (C)}$ **Ans**

$\uparrow +\Sigma F_y = 0;\ F_{GE} = 3.00\text{ k (C)}$ **Ans**

Joint E

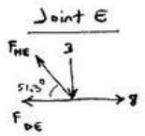

$\uparrow +\Sigma F_y = 0;\ F_{HE}\sin 51.3° - 3 = 0 \quad F_{HE} = 3.84\text{ k (T)}$ **Ans**

$\rightarrow +\Sigma F_x = 0;\ 8 - 3.842\cos 51.3° - F_{DE} = 0$

$F_{DE} = 5.60\text{ k (T)}$ **Ans**

Joint D

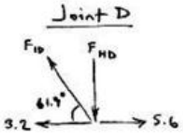

$\rightarrow +\Sigma F_x = 0;\ 5.6 - 3.2 - F_{ID}\cos 61.9° = 0 \quad F_{ID} = 5.10\text{ k (T)}$ **Ans**

$\uparrow +\Sigma F_y = 0;\ 5.10\sin 61.9° - F_{HD} = 0 \quad F_{HD} = 4.50\text{ k (C)}$ **Ans**

Joint H

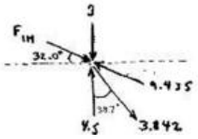

$\rightarrow +\Sigma F_x = 0;\ F_{IH}\cos 32.0° - 9.435\cos 32.0° + 3.842\sin 38.7° = 0$

$F_{IH} = 6.60\text{ k (C)}$ **Ans**

www.e-kitabi.com

© 2009 by R.C. Hibbeler. Published by Pearson Prentice Hall, Pearson Education, Inc., Upper Saddle River, NJ. All rights reserved. This material is protected under all copyright laws as they currently exist. No portion of this material may be reproduced, in any form or by any means, without permission in writing from the publisher.

***3–8.** Determine the force in each member of the truss. State if the members are in tension or compression. Assume all members are pin connected.

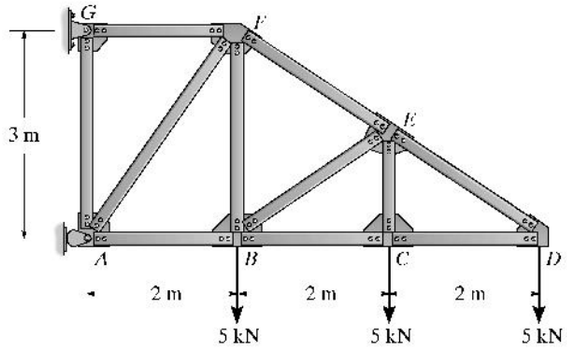

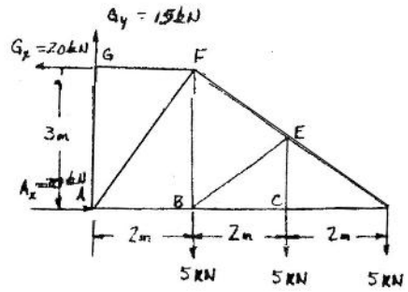

Joint D :

$+\uparrow \Sigma F_y = 0;$ $F_{ED}\left(\frac{3}{5}\right) - 5 = 0;$ $F_{ED} = 8.33$ kN (T) Ans

$\overset{+}{\rightarrow} \Sigma F_x = 0;$ $F_{CD} - \frac{4}{5}(8.33) = 0;$

$F_{CD} = 6.67$ kN (C) Ans

JOINT D

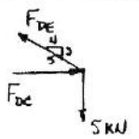

Joint C :

$\overset{+}{\rightarrow} \Sigma F_x = 0;$ $F_{BC} - 6.67 = 0;$

$F_{BC} = 6.67$ kN (C) Ans

$+\uparrow \Sigma F_y = 0;$ $F_{CE} - 5 = 0;$

$F_{CE} = 5$ kN (T) Ans

JOINT C

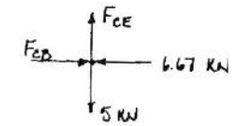

Joint G :

$\overset{+}{\rightarrow} \Sigma F_x = 0;$ $F_{GF} - 20 = 0;$ $F_{GF} = 20$ kN (T) Ans

$+\uparrow \Sigma F_y = 0;$ $15 - F_{GA} = 0;$ $F_{GA} = 15$ kN (T) Ans

JOINT G

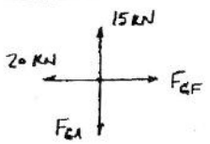

Joint A :

$+\uparrow \Sigma F_y = 0;$ $15 - F_{AF}(\sin 56.3^0) = 0;$

$F_{AF} = 18.0$ kN (C) Ans

$\overset{+}{\rightarrow} \Sigma F_x = 0;$ $-F_{AB} - 18.0(\cos 56.3^0) + 20 = 0;$

$F_{AB} = 10.0$ kN (C) Ans

JOINT A

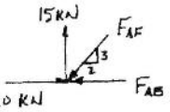

Joint B :

$\overset{+}{\rightarrow} \Sigma F_x = 0;$ $-F_{BE}\left(\frac{4}{5}\right) + 10.0 - 6.67 = 0;$

$F_{BE} = 4.17$ kN (C) Ans

$+\uparrow \Sigma F_y = 0;$ $F_{FB} - 5 - 4.17\left(\frac{3}{5}\right) = 0;$

$F_{FB} = 7.50$ kN (T) Ans

Joint F :

$+\uparrow \Sigma F_y = 0;$ $18(\sin 56.3^0) - 7.5 - F_{FE}\left(\frac{3}{5}\right) = 0;$

$F_{FE} = 12.5$ kN (T) Ans

JOINT F

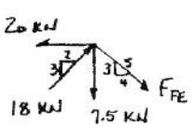

JOINT B

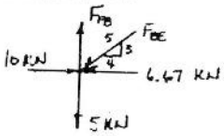

www.e-kitabi.com

c03.qxd 6/24/08 2:56 PM Page 50

© 2009 by R.C. Hibbeler. Published by Pearson Prentice Hall, Pearson Education, Inc., Upper Saddle River, NJ. All rights reserved. This material is protected under all copyright laws as they currently exist. No portion of this material may be reproduced, in any form or by any means, without permission in writing from the publisher.

3–9. Determine the force in each member of the roof truss. State if the members are in tension or compression. Assume all members are pin connected.

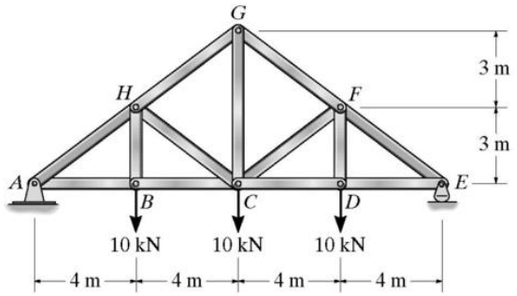

Joint *A*

$\Sigma F_y = 0;\quad -\frac{3}{5}F_{AH} + 15\text{ kN} = 0$

$F_{AH} = 25\text{ kN (C)}$ **Ans**

$\Sigma F_x = 0;\quad -\frac{4}{5}(25\text{ kN}) + F_{AB} = 0$

$F_{AB} = 20\text{ kN (T)}$ **Ans**

Joint *B*

$\Sigma F_x = 0;\quad F_{BC} = 20\text{ kN (T)}$ **Ans**

$\Sigma F_y = 0;\quad F_{BH} = 10\text{ kN (T)}$ **Ans**

Joint *H*

$\Sigma F_y = 0;\quad \frac{3}{5}(25\text{ kN}) - 10\text{ kN} + \frac{3}{5}F_{HC} - \frac{3}{5}F_{HG} = 0$

$\Sigma F_x = 0;\quad \frac{4}{5}(25\text{ kN}) - \frac{4}{5}F_{HC} - \frac{4}{5}F_{HG} = 0$

$F_{HG} = 16.7\text{ kN (C)}$ **Ans**

$F_{HC} = 8.33\text{ kN (C)}$ **Ans**

Joint *G*

$\Sigma F_x = 0;\quad \frac{4}{5}(16.67\text{ kN}) - \frac{4}{5}F_{GF} = 0$

$F_{GF} = 16.7\text{ kN (C)}$ **Ans**

$\Sigma F_x = 0;\quad \frac{3}{5}(16.67\text{ kN}) + \frac{3}{5}(16.67\text{ kN}) - F_{GC} = 0$

$F_{GC} = 20\text{ kN (T)}$ **Ans**

The other members are determined from symmetry.

JOINT A:

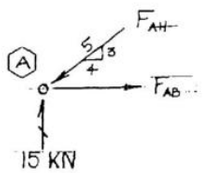

JOINT B:

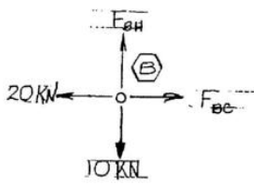

JOINT H

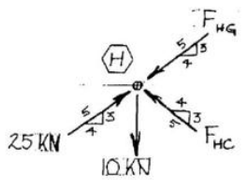

JOINT G:

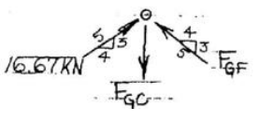

www.e-kitabi.com

c03.qxd 6/24/08 2:56 PM Page 51

© 2009 by R.C. Hibbeler. Published by Pearson Prentice Hall, Pearson Education, Inc., Upper Saddle River, NJ. All rights reserved. This material is protected under all copyright laws as they currently exist. No portion of this material may be reproduced, in any form or by any means, without permission in writing from the publisher.

3–10. The *Howe truss* is subjected to the loading shown. Determine the force in members *GF*, *CD*, and *GC*, and state if the members are in tension or compression.

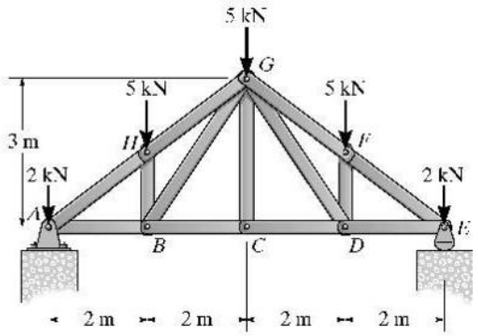

$\left(+\Sigma M_A = 0;\right)$ $E_y(8) - 2(8) - 5(6) - 5(4) - 5(2) = 0$ $E_y = 9.5$ kN

$\left(+\Sigma M_D = 0;\right)$ $-\frac{4}{5}F_{GF}(1.5) - 2(2) + 9.5(2) = 0$

$F_{GF} = 12.5$ kN (C) **Ans**

$\left(+\Sigma M_G = 0;\right)$ $9.5(4) - 2(4) - 5(2) - F_{CD}(3) = 0$

$F_{CD} = 6.67$ kN (T) **Ans**

Joint C :

$+\uparrow \Sigma F_y = 0;$ $F_{GC} = 0$ **Ans**

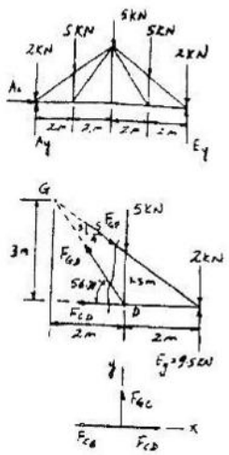

3–11. The *Howe truss* is subjected to the loading shown. Determine the force in members *GH*, *BC*, and *BG* of the truss and state if the members are in tension or compression.

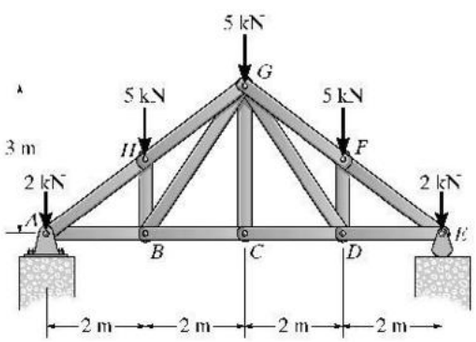

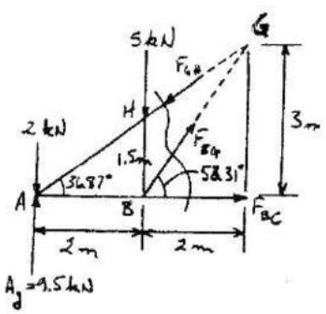

$\left(+\Sigma M_B = 0;\right)$ $-7.5(2) + F_{GH}\sin 36.87°(2) = 0$

$F_{GH} = 12.5$ kN (C) **Ans**

$\left(+\Sigma M_A = 0;\right)$ $-5(2) + F_{BG}\sin 56.31°(2) = 0$

$F_{BG} = 6.01$ kN (T) **Ans**

$\left(+\Sigma M_G = 0;\right)$ $-7.5(4) + 5(2) + F_{BC}(3) = 0$

$F_{BC} = 6.67$ kN (T) **Ans**

www.e-kitabi.com

c03.qxd 6/24/08 2:56 PM Page 52

© 2009 by R.C. Hibbeler. Published by Pearson Prentice Hall, Pearson Education, Inc., Upper Saddle River, NJ. All rights reserved. This material is protected under all copyright laws as they currently exist. No portion of this material may be reproduced, in any form or by any means, without permission in writing from the publisher.

***3–12.** Determine the force in each member of the roof truss. State if the members are in tension or compression.

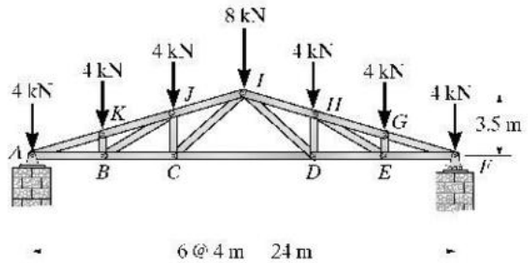

Reactions:

$A_y = 16.0\ \text{kN}, \quad A_x = 0, \quad F_y = 16.0\ \text{kN}$

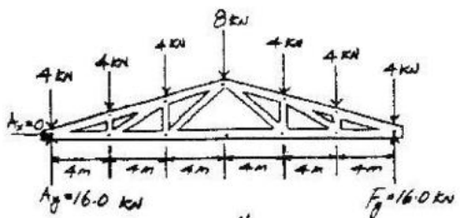

Joint *A*:

$+\uparrow \Sigma F_y = 0;\ -F_{AK}\sin 16.26° - 4 + 16 = 0$

$F_{AK} = 42.86\ \text{kN} = 42.9\ \text{kN (C)}$ **Ans**

$\pm \Sigma F_x = 0;\ F_{AB} - 42.86\cos 16.26° = 0$

$F_{AB} = 41.14\ \text{kN} = 41.1\ \text{kN (T)}$ **Ans**

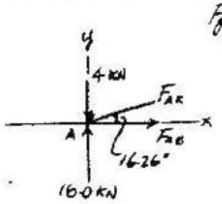

Joint *K*:

$+\downarrow \Sigma F_y = 0;\ -4\cos 16.26° + F_{KB}\cos 16.26° = 0$

$F_{KB} = 4.00\ \text{kN (C)}$ **Ans**

$\pm \Sigma F_x = 0;\ 42.86 + 4.00\sin 16.26° - 4.00\sin 16.26° - F_{KJ} = 0$

$F_{KJ} = 42.86\ \text{kN} = 42.9\ \text{kN (C)}$ **Ans**

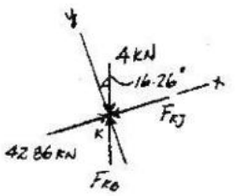

Joint *B*:

$+\uparrow \Sigma F_y = 0;\ F_{BJ}\sin 30.26° - 4 = 0$

$F_{BJ} = 7.938\ \text{kN} = 7.94\ \text{kN (T)}$ **Ans**

$\pm \Sigma F_x = 0;\ F_{BC} + 7.938\cos 30.26° - 41.14 = 0$

$F_{BC} = 34.29\ \text{kN} = 34.3\ \text{kN (T)}$ **Ans**

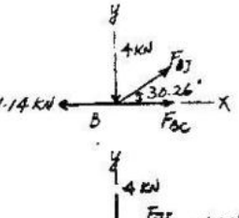

Joint *J*:

$\pm \Sigma F_x = 0;\ -F_{JI}\cos 16.26° - 7.939\sin 59.74° + 42.86\cos 16.26° = 0$

$F_{JI} = 35.71\ \text{kN} = 35.7\ \text{kN (C)}$ **Ans**

$+\uparrow \Sigma F_y = 0;\ F_{JC} + 42.86\sin 16.26° - 7.939\cos 59.74° - 4 - 35.71\sin 16.26° = 0$

$F_{JC} = 6.00\ \text{kN (C)}$ **Ans**

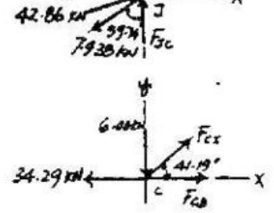

Joint *C*:

$+\uparrow \Sigma F_y = 0;\ F_{CI}\sin 41.19° - 6.00 = 0$

$F_{CI} = 9.111\ \text{kN} = 9.11\ \text{kN (T)}$ **Ans**

$\pm \Sigma F_x = 0;\ F_{CD} + 9.111\cos 41.19° - 34.29 = 0$

$F_{CD} = 27.4\ \text{kN (T)}$ **Ans**

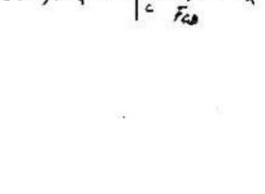

Due to symmetrical loading and geometry

$F_{IH} = 35.7\ \text{kN (C)}$ **Ans**

$F_{HD} = 6.00\ \text{kN (C)}$ **Ans**

$F_{HE} = 7.94\ \text{kN (T)}$ **Ans**

$F_{FG} = 42.9\ \text{kN (C)}$ **Ans**

$F_{GD} = 34.3\ \text{kN (T)}$ **Ans**

$F_{ED} = 9.11\ \text{kN (T)}$ **Ans**

$F_{BG} = 42.9\ \text{kN (C)}$ **Ans**

$F_{GE} = 4.00\ \text{kN (C)}$ **Ans**

$F_{FE} = 41.1\ \text{kN (T)}$ **Ans**

www.e-kitabi.com

c03.qxd 6/24/08 2:56 PM Page 53

© 2009 by R.C. Hibbeler. Published by Pearson Prentice Hall, Pearson Education, Inc., Upper Saddle River, NJ. All rights reserved. This material is protected under all copyright laws as they currently exist. No portion of this material may be reproduced, in any form or by any means, without permission in writing from the publisher.

3–13. Determine the force in each member of the roof truss. State if the members are in tension or compression. Assume all members are pin connected.

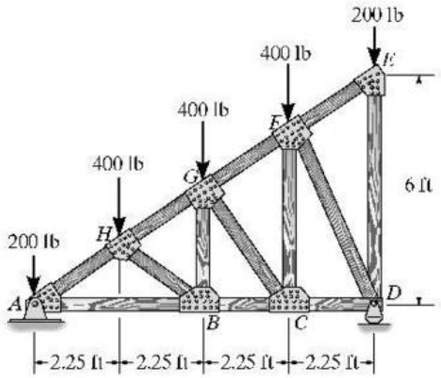

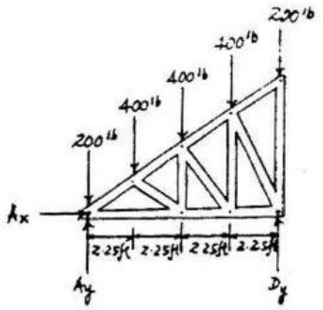

Reactions :

$A_x = 0$. $A_y = 800$ lb. $D_y = 800$ lb

Joint A :

$+\uparrow \Sigma F_y = 0;\ -F_{AH}\sin 33.69° + 800 - 200 = 0$

$F_{AH} = 1081.7\text{ lb} = 1.08\text{ k(C)}$ **Ans**

$\pm \Sigma F_x = 0;\ F_{AB} - 1081.7\cos 33.69° = 0$

$F_{AB} = 900\text{ lb (T)}$ **Ans**

Joint H :

$+ \Sigma F_y = 0;\ -400\cos 33.69° + F_{HB}\sin 67.38° = 0$

$F_{HB} = 360.56\text{ lb} = 361\text{ lb (C)}$ **Ans**

$+ \Sigma F_x = 0;\ 1081.7 - F_{HG} - 400\sin 33.69° - 360.56\cos 67.38° = 0$

$F_{HG} = 721.11\text{ lb} = 721\text{ lb (C)}$ **Ans**

Joint B :

$\pm \Sigma F_x = 0;\ F_{BC} + 360.56\cos 33.69° - 900 = 0$

$F_{BC} = 600\text{ lb (T)}$ **Ans**

$+\uparrow \Sigma F_y = 0;\ -360.56\sin 33.69° + F_{BG} = 0$

$F_{BG} = 200\text{ lb (T)}$ **Ans**

Joint G :

$+\downarrow \Sigma F_y = 0;\ F_{GC}\cos 3.18° - 400\cos 33.69° - 200\cos 33.69° = 0$

$F_{GC} = 500\text{ lb (C)}$ **Ans**

$+\searrow \Sigma F_x = 0;\ -F_{GF} + 721.11 - 400\sin 33.69° - 200\sin 33.69° - 500\sin 3.18° = 0$

$F_{GF} = 361\text{ lb (C)}$ **Ans**

Joint C :

$\pm \Sigma F_x = 0;\ F_{CD} - 600 + 500\cos 53.13° = 0$

$F_{CD} = 300\text{ lb (T)}$ **Ans**

$+\uparrow \Sigma F_y = 0;\ F_{CF} - 500\sin 53.13° = 0$

$F_{CF} = 400\text{ lb (T)}$ **Ans**

Joint E :

$\pm \Sigma F_x = 0;\ F_{EF} = 0$ **Ans**

$+\uparrow \Sigma F_y = 0;\quad F_{ED} - 200 = 0;\quad F_{ED} = 200\text{ lb (C)}$ **Ans**

Joint D :

$\pm \Sigma F_x = 0;\ -300 + F_{DF}\cos 63.43° = 0$

$F_{DF} = 670.82\text{ lb} = 671\text{ lb (C)}$ **Ans**

$+\uparrow \Sigma F_y = 0;\ 800 - 200 - 670.82\sin 63.435° = 0$ **(Check)**

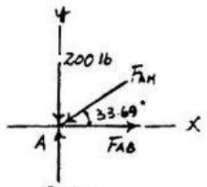

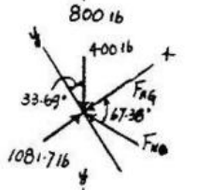

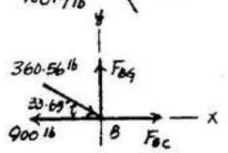

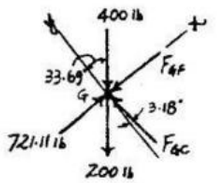

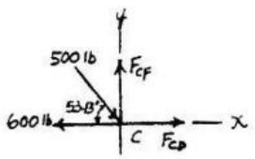

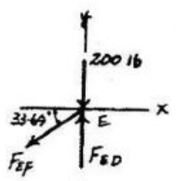

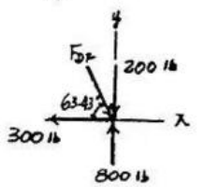

www.e-kitabi.com

c03.qxd 6/24/08 2:56 PM Page 54

© 2009 by R.C. Hibbeler. Published by Pearson Prentice Hall, Pearson Education, Inc., Upper Saddle River, NJ. All rights reserved. This material is protected under all copyright laws as they currently exist. No portion of this material may be reproduced, in any form or by any means, without permission in writing from the publisher.

3–14. Determine the force in members *III*, *BC*, and *BI* of the bridge truss. Solve for each unknown using a single equation of equilibrium. State if the members are in tension or compression. Assume all members are pin connected.

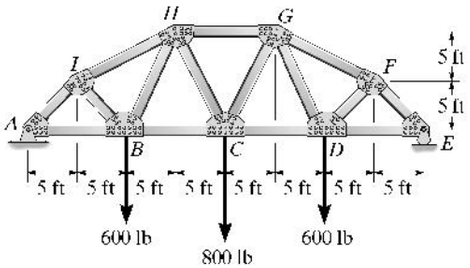

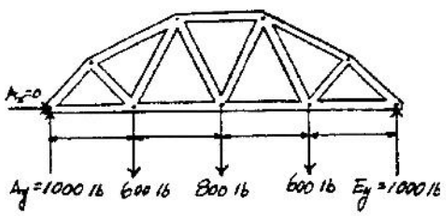

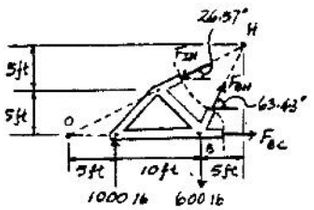

Reactions due to symmetry,

$A_x = 0, A_y = E_y = 1000$ lb

$(+\Sigma M_B = 0;\ -1000(10) + F_{IH} \sin 26.57°(15) = 0$
$F_{IH} = 1490.7$ lb $= 1.49$ k (C) **Ans**

$(+\Sigma M_H = 0;\ -1000(15) + 600(5) + F_{BC}(10) = 0$
$F_{BC} = 1200$ lb $= 1.20$ k (T) **Ans**

$(+\Sigma M_O = 0;\ 1000(5) - 600(15) + F_{BH} \sin 63.43°(15) = 0$
$F_{BH} = 298$ lb (T) **Ans**

or

$+\uparrow \Sigma F_y = 0;\ 1000 - 600 - 1490.7 (\sin 26.56°) + F_{BH}(\sin 63.43°) = 0$
$F_{BH} = 298$ lb (T) **Check**

www.e-kitabi.com

© 2009 by R.C. Hibbeler. Published by Pearson Prentice Hall, Pearson Education, Inc., Upper Saddle River, NJ. All rights reserved. This material is protected under all copyright laws as they currently exist. No portion of this material may be reproduced, in any form or by any means, without permission in writing from the publisher.

3–15. Determine the force in each member of the roof truss. State if the members are in tension or compression.

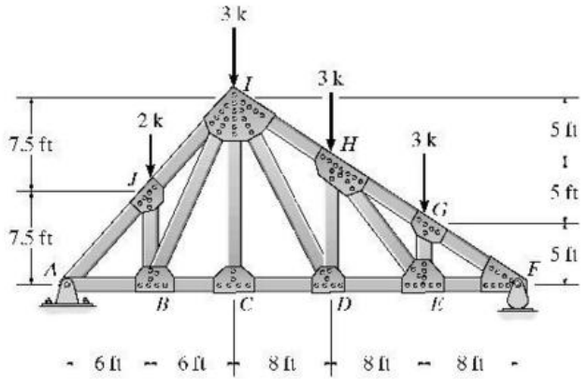

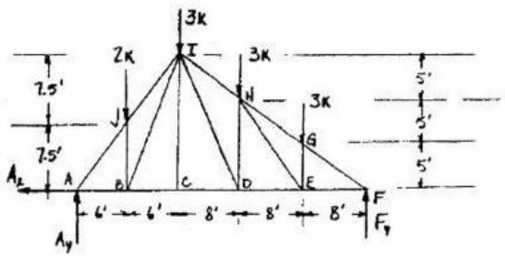

Entire truss :

$\circlearrowleft + \Sigma M_A = 0;\quad -F_y(36)+3(28)+3(20)+3(12)+2(6)=0$

$F_y = 5.33\ \text{k}$

$+\uparrow \Sigma F_y = 0;\quad A_y + 5.33 - 2 - 3 - 3 - 3 = 0$

$A_y = 5.67\ \text{k}$

Joint A :

$+\uparrow \Sigma F_y = 0;\quad 5.67 - F_{AJ}\left(\frac{15}{19.21}\right) = 0$

$F_{AJ} = 7.26\ \text{k (C)}$ **Ans**

$\rightarrow \Sigma F_x = 0;\quad F_{AB} - 7.26\left(\frac{12}{19.21}\right) = 0$

$F_{AB} = 4.54\ \text{k (T)}$ **Ans**

Joint J :

$\rightarrow \Sigma F_x = 0;\quad 7.26\left(\frac{12}{19.21}\right) - F_{JI}\left(\frac{12}{19.21}\right) = 0$

$F_{JI} = 7.26\ \text{k (C)}$ **Ans**

$+\uparrow \Sigma F_y = 0;\quad F_{JB} - 2 + 7.26\left(\frac{15}{19.21}\right) - 7.26\left(\frac{15}{19.21}\right) = 0$

$F_{JB} = 2\ \text{k (C)}$ **Ans**

Joint B :

$+\uparrow \Sigma F_y = 0;\quad F_{BI}\left(\frac{15}{16.16}\right) - 2 = 0$

$F_{BI} = 2.15\ \text{k (T)}$ **Ans**

$\rightarrow \Sigma F_x = 0;\quad F_{BC} - 4.54 + 2.15\left(\frac{6}{16.16}\right) = 0$

$F_{BC} = 3.74\ \text{k (T)}$ **Ans**

Joint C :

$+\uparrow \Sigma F_y = 0;\quad F_{CI} = 0$ **Ans**

$\rightarrow \Sigma F_x = 0;\quad F_{CD} = 3.74\ \text{k (T)}$ **Ans**

Joint F :

$+\uparrow \Sigma F_y = 0;\quad 5.33 - F_{FG}\left(\frac{5}{9.43}\right) = 0$

$F_{FG} = 10.1\ \text{k (C)}$ **Ans**

$\rightarrow \Sigma F_x = 0;\quad F_{FE} - 10.1\left(\frac{8}{9.43}\right) = 0$

$F_{FE} = 8.53\ \text{k (T)}$ **Ans**

Joint G :

$\rightarrow \Sigma F_x = 0;\quad -10.1\left(\frac{8}{9.43}\right) + F_{GH}\left(\frac{8}{9.43}\right) = 0$

$F_{GH} = 10.1\ \text{k (C)}$ **Ans**

$+\uparrow \Sigma F_y = 0;\quad F_{GE} - 3 - 10.1\left(\frac{5}{9.43}\right) + 10.1\left(\frac{5}{9.43}\right) = 0$

$F_{GE} = 3\ \text{k (C)}$ **Ans**

Joint E :

$+\uparrow \Sigma F_y = 0;\quad F_{EH}\left(\frac{10}{12.81}\right) - 3 = 0$

$F_{EH} = 3.84\ \text{k (T)}$ **Ans**

$\rightarrow \Sigma F_x = 0;\quad 8.53 - F_{ED} - 3.84\left(\frac{8}{12.81}\right) = 0$

$F_{ED} = 6.13\ \text{k (T)}$ **Ans**

Joint D :

$\rightarrow \Sigma F_x = 0;\quad 6.13 - 3.74 - F_{DI}\left(\frac{8}{17}\right) = 0$

$F_{DI} = 5.10\ \text{k (T)}$ **Ans**

$+\uparrow \Sigma F_y = 0;\quad 5.10\left(\frac{15}{17}\right) - F_{DH} = 0$

$F_{DH} = 4.50\ \text{k (C)}$ **Ans**

Joint H :

$\rightarrow \Sigma F_x = 0;\quad F_{HI}\left(\frac{8}{9.43}\right) - 10.1\left(\frac{8}{9.43}\right) + 3.84\left(\frac{8}{12.8}\right) = 0$

$F_{HI} = 7.23\ \text{k (C)}$ **Ans**

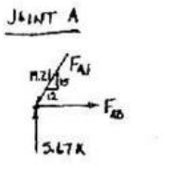

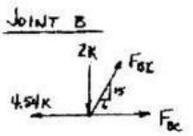

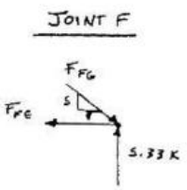

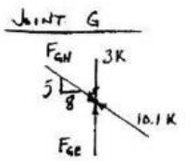

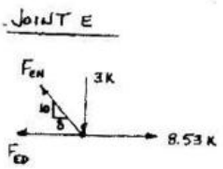

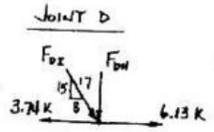

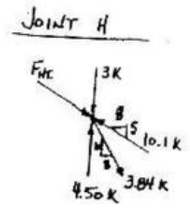

www.e-kitabi.com

c03.qxd 6/24/08 2:56 PM Page 56

© 2009 by R.C. Hibbeler. Published by Pearson Prentice Hall, Pearson Education, Inc., Upper Saddle River, NJ. All rights reserved. This material is protected under all copyright laws as they currently exist. No portion of this material may be reproduced, in any form or by any means, without permission in writing from the publisher.

3–16. Solve Prob. 3–15 assuming there is *no* external load on joints *J*, *H*, and *G* and only the vertical load of 3 k exists on joint *I*.

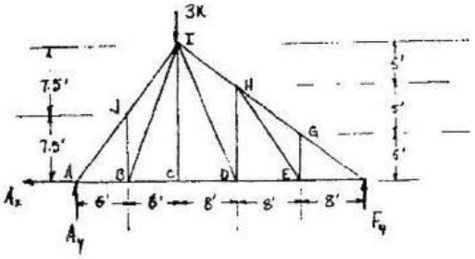

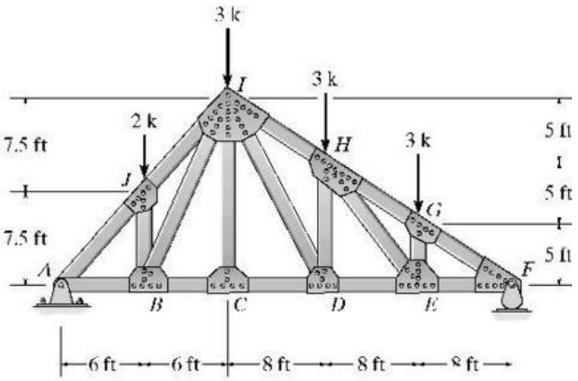

Entire truss :

$+\circlearrowleft \Sigma M_A = 0;$ $\quad 3(12) - 36F_y = 0;$ $\quad F_y = 1\text{ k}$

$+\uparrow \Sigma F_y = 0;$ $\quad A_y + 1 - 3 = 0;$ $\quad A_y = 2\text{ k}$

Joint *F* :

$+\uparrow \Sigma F_y = 0;$ $\quad 1 - F_{GF}\left(\frac{5}{9.43}\right) = 0;$ $\quad F_{GF} = 1.89\text{ k (C)}$ Ans

$\stackrel{+}{\rightarrow} \Sigma F_x = 0;$ $\quad 1.89\left(\frac{8}{9.43}\right) - F_{EF} = 0;$ $\quad F_{EF} = 1.60\text{ k (T)}$ Ans

Joint *G* :

$\stackrel{+}{\rightarrow} \Sigma F_x = 0;$ $\quad F_{HG}\left(\frac{8}{9.43}\right) - 1.89\left(\frac{8}{9.43}\right) = 0$

$F_{HG} = 1.89\text{ k (C)}$ Ans

$+\uparrow \Sigma F_y = 0;$ $\quad F_{GE} = 0$ Ans

Joint *E* :

$+\uparrow \Sigma F_y = 0;$ $\quad F_{HE} = 0$ Ans

$\stackrel{+}{\rightarrow} \Sigma F_x = 0;$ $\quad 1.6 - F_{ED} = 0$

$F_{ED} = 1.60\text{ k (T)}$ Ans

Joint *H* :

$\stackrel{+}{\rightarrow} \Sigma F_x = 0;$ $\quad F_{IH}\left(\frac{8}{9.43}\right) - 1.89\left(\frac{8}{9.43}\right) = 0$

$F_{IH} = 1.89\text{ k (C)}$ Ans

$+\uparrow \Sigma F_y = 0;$ $\quad F_{HD} = 0$ Ans

Joint *D* :

$+\uparrow \Sigma F_y = 0;$ $\quad F_{ID} = 0$ Ans

$\stackrel{+}{\rightarrow} \Sigma F_x = 0;$ $\quad 1.6 - F_{CD} = 0;$ $\quad F_{CD} = 1.60\text{ k (T)}$ Ans

Joint *C* :

$+\uparrow \Sigma F_y = 0;$ $\quad F_{IC} = 0$ Ans

$\stackrel{+}{\rightarrow} \Sigma F_x = 0;$ $\quad 1.6 - F_{CB} = 0$

$F_{CB} = 1.60\text{ k (T)}$ Ans

Joint *A* :

$+\uparrow \Sigma F_y = 0;$ $\quad -F_{AJ}\left(\frac{15}{19.21}\right) + 2 = 0$

$F_{AJ} = 2.56\text{ k (C)}$ Ans

$\stackrel{+}{\rightarrow} \Sigma F_x = 0;$ $\quad F_{AB} - 2.56\left(\frac{12}{19.21}\right) = 0$

$F_{AB} = 1.60\text{ k (T)}$ Ans

Joint *J* :

$\stackrel{+}{\rightarrow} \Sigma F_x = 0;$ $\quad -F_{IJ}\left(\frac{15}{19.21}\right) + 2.56\left(\frac{15}{19.21}\right) = 0$

$F_{IJ} = 2.56\text{ k (C)}$ Ans

$+\uparrow \Sigma F_y = 0;$ $\quad F_{BJ} = 0$ Ans

Joint *B* :

$+\uparrow \Sigma F_y = 0;$ $\quad F_{BI} = 0$ Ans

JOINT F

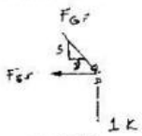

JOINT G

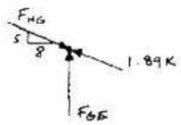

JOINT E

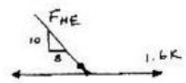

JOINT H

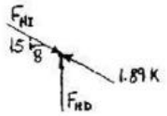

JOINT D

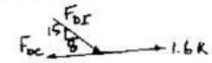

JOINT C

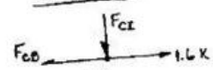

JOINT A

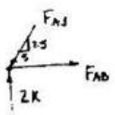

JOINT J

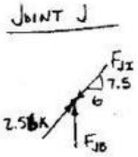

JOINT B

www.e-kitabi.com

© 2009 by R.C. Hibbeler. Published by Pearson Prentice Hall, Pearson Education, Inc., Upper Saddle River, NJ. All rights reserved. This material is protected under all copyright laws as they currently exist. No portion of this material may be reproduced, in any form or by any means, without permission in writing from the publisher.

3–17. Determine the force in members *GF*, *FC*, and *CD* of the cantilever truss. State if the members are in tension or compression. Assume all members are pin connected.

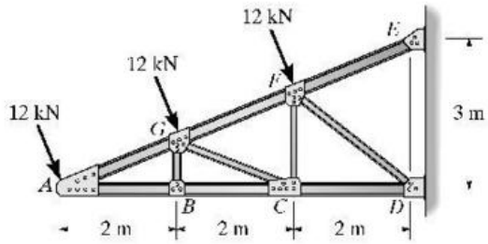

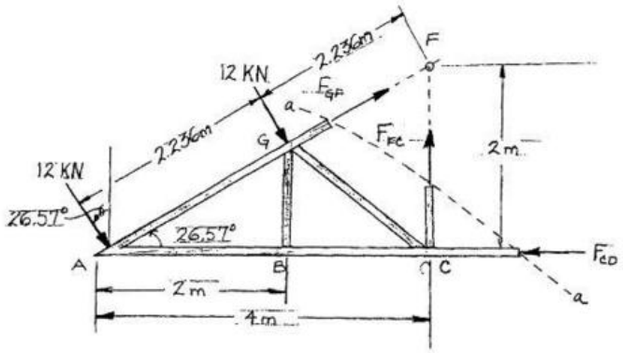

$$\left(+\Sigma M_C = 0;\right) \quad 12\text{ kN}(\cos 26.57°)(4\text{ m}) + 12\text{ kN}(\cos 26.57°)(2\text{ m}) - 12\text{ kN}(\sin 26.57°)(1\text{ m}) - F_{GF}\sin 26.57°(4\text{ m}) = 0$$

$$F_{GF} = 33.0\text{ kN (T)} \qquad \textbf{Ans}$$

$$\left(+\Sigma M_A = 0;\right) \quad -12\text{ kN}(2.236\text{ m}) + F_{FC}(4\text{ m}) = 0$$

$$F_{FC} = 6.71\text{ kN (T)} \qquad \textbf{Ans}$$

$$\left(+\Sigma M_F = 0;\right) \quad 12\text{ kN}(2.236\text{ m}) + 12\text{ kN}(2)(2.236\text{ m}) - F_{CD}(2\text{ m}) = 0$$

$$F_{CD} = 40.2\text{ kN (C)} \qquad \textbf{Ans}$$

3–18. Determine the forces in members *KJ*, *CD*, and *CJ* of the truss. State if the members are in tension or compression.

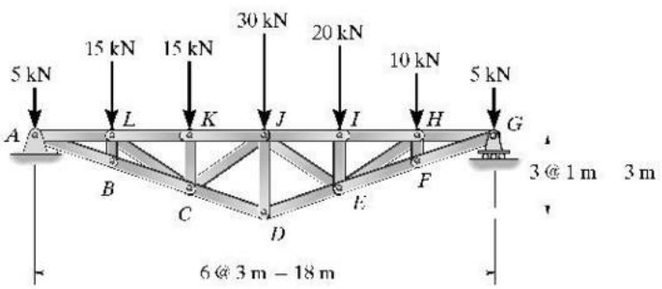

Entire truss:

$$\rightarrow \Sigma F_x = 0; \quad A_x = 0$$

$$\left(+\Sigma M_A = 0;\right) \quad -15(3) - 15(6) - 30(9) - 20(12) - 10(15) - 5(18) + G_y(18) = 0$$

$$G_y = 49.17\text{ kN}$$

$$+\uparrow \Sigma F_y = 0; \quad A_y - 5 - 15 - 15 - 30 - 20 - 10 - 5 + 49.167 = 0$$

$$A_y = 50.83\text{ kN}$$

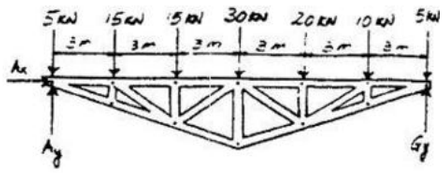

Section:

$$\left(+\Sigma M_C = 0;\right) \quad 15(3) + 5(6) - 50.83(6) + F_{KJ}(2) = 0$$

$$F_{KJ} = 115\text{ kN (C)} \qquad \textbf{Ans}$$

$$\left(+\Sigma M_A = 0;\right) \quad -15(3) - 15(6) + F_{CJ}\sin 33.69°(9) = 0$$

$$F_{CJ} = 27.0\text{ kN (T)} \qquad \textbf{Ans}$$

$$\left(+\Sigma M_J = 0;\right) \quad -50.83(9) + 5(9) + 15(6) + 15(3) + F_{CD}\cos 18.43°(3) = 0$$

$$F_{CD} = 97.5\text{ kN (T)} \qquad \textbf{Ans}$$

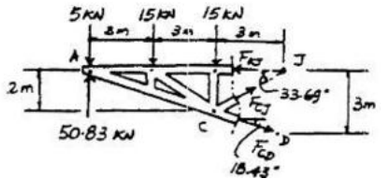

www.e-kitabi.com

c03.qxd 6/24/08 2:56 PM Page 58

© 2009 by R.C. Hibbeler. Published by Pearson Prentice Hall, Pearson Education, Inc., Upper Saddle River, NJ. All rights reserved. This material is protected under all copyright laws as they currently exist. No portion of this material may be reproduced, in any form or by any means, without permission in writing from the publisher.

3–19. Determine the forces in members *JI*, *JD*, and *DE* of the truss. State if the members are in tension or compression.

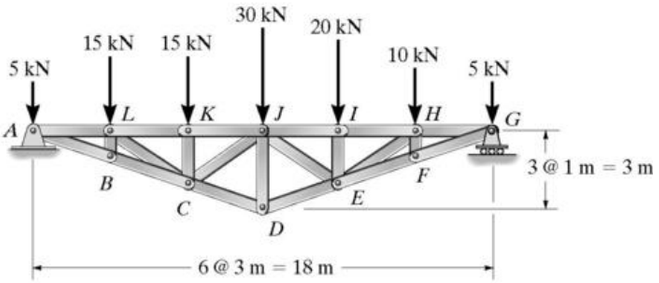

Entire truss :

$\stackrel{+}{\rightarrow}\Sigma F_x = 0;\quad A_x = 0$

$\zeta+\Sigma M_A = 0;\ -15(3) - 15(6) - 30(9) - 20(12) - 10(15) - 5(18) + G_y(18) = 0$

$G_y = 49.17\ \text{kN}$

$+\uparrow\Sigma F_y = 0;\ A_y - 5 - 15 - 15 - 30 - 20 - 10 - 5 + 49.17 = 0$

$A_y = 50.833\ \text{kN}$

Section :

$\zeta+\Sigma M_E = 0;\ -F_{JI}(2) - 10(3) - 5(6) + 49.17(6) = 0$

$F_{JI} = 117.5\ \text{kN (C)}$ **Ans**

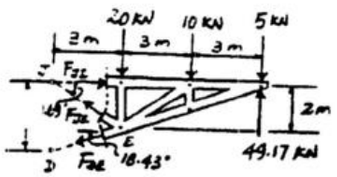

$+\Sigma M_J = 0;\quad -20(3) - 10(6) - 5(9) + 49.17(9)$

$-F_{DE}\cos 18.43°(2) - F_{DE}\sin 18.43°(3) = 0 \quad F_{DE} = 97.5\ \text{kN (T)}$ **Ans**

$F_{DE} = 97.5\ \text{kN (T)}$ **Ans**

Joint *D* :

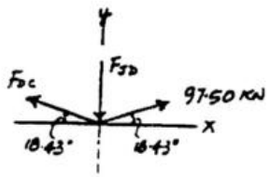

$\stackrel{+}{\rightarrow}\Sigma F_x = 0;\ 97.5\cos 18.43° - F_{CD}\cos 18.43° = 0$

$F_{CD} = 97.5\ \text{kN (T)}$

$+\uparrow\Sigma F_y = 0;\ 2(97.5\sin 18.43°) - F_{JD} = 0$

$F_{JD} = 61.7\ \text{kN (C)}$ **Ans**

***3–20.** Determine the force in each member of the truss in terms of the load *P* and state if the members are in tension or compression.

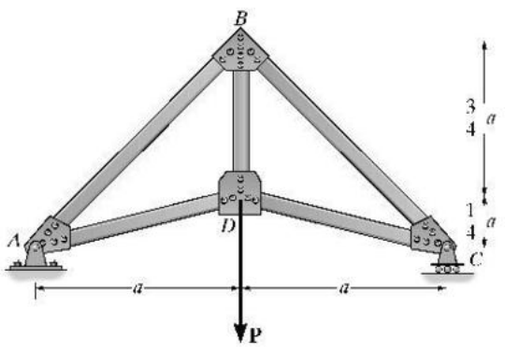

Joint *A* :

$\stackrel{+}{\rightarrow}\Sigma F_x = 0;\quad \frac{4}{\sqrt{17}}(F_{AD}) - \frac{1}{\sqrt{2}}F_{AB} = 0$

$+\uparrow\Sigma F_y = 0;\quad \frac{P}{2} - \frac{1}{\sqrt{2}}(F_{AB}) + \frac{1}{\sqrt{17}}(F_{AD}) = 0$

$F_{CD} = F_{AD} = 0.687\,P\ \text{(T)}$ **Ans**

$F_{CB} = F_{AB} = 0.943\,P\ \text{(C)}$ **Ans**

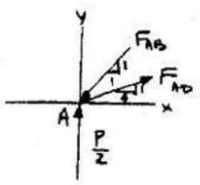

Joint *D* :

$+\uparrow\Sigma F_y = 0;\quad F_{DB} - 0.687\,P\left(\frac{1}{\sqrt{17}}\right) - \frac{1}{\sqrt{17}}(0.687\,P) - P = 0$

$F_{DB} = 1.33\,P\ \text{(T)}$ **Ans**

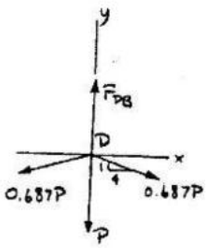

www.e-kitabi.com

c03.qxd 6/24/08 2:56 PM Page 59

© 2009 by R.C. Hibbeler. Published by Pearson Prentice Hall, Pearson Education, Inc., Upper Saddle River, NJ. All rights reserved. This material is protected under all copyright laws as they currently exist. No portion of this material may be reproduced, in any form or by any means, without permission in writing from the publisher.

3–21. Members AB and BC can each support a maximum compressive force of 800 lb, and members AD, DC, and BD can support a maximum tensile force of 1500 lb. If $a = 10$ ft, determine the greatest load P the truss can support.

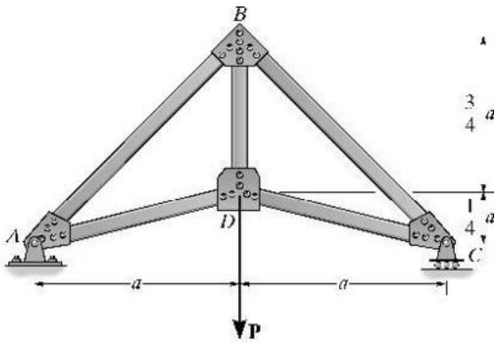

1) Assume $F_{AB} = 800$ lb (C)

Joint A:

$$\stackrel{+}{\rightarrow}\Sigma F_x = 0; \quad -800\left(\frac{1}{\sqrt{2}}\right) + F_{AD}\left(\frac{4}{\sqrt{17}}\right) = 0$$

$$F_{AD} = 583.0952 \text{ lb} < 1500 \text{ lb} \quad \text{OK}$$

$$+\uparrow\Sigma F_y = 0; \quad \frac{P}{2} - \frac{1}{\sqrt{2}}(800) + \frac{1}{\sqrt{17}}(583.0952) = 0$$

$$P = 848.5297 \text{ lb}$$

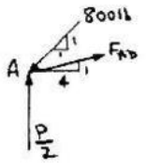

Joint D:

$$+\uparrow\Sigma F_y = 0; \quad -848.5297 - 583.0952(2)\left(\frac{1}{\sqrt{17}}\right) + F_{DB} = 0$$

$$F_{BD} = 1131.3724 \text{ lb} < 1500 \text{ lb} \quad \text{OK}$$

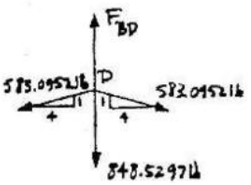

Thus, $P_{max} = 849$ lb **Ans**

3–22. Members AB and BC can each support a maximum compressive force of 800 lb, and members AD, DC, and BD can support a maximum tensile force of 2000 lb. If $a = 6$ ft determine the greatest load P the truss can support.

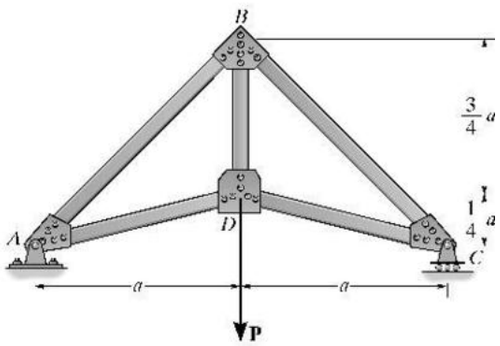

Assume $F_{AB} = 800$ lb (C)

Joint A:

$$\stackrel{+}{\rightarrow}\Sigma F_x = 0; \quad -800\left(\frac{1}{\sqrt{2}}\right) + F_{AD}\left(\frac{4}{\sqrt{17}}\right) = 0$$

$$F_{AD} = 583.0952 \text{ lb} < 1500 \text{ lb} \quad \text{OK}$$

$$+\uparrow\Sigma F_y = 0; \quad \frac{P}{2} - \frac{1}{\sqrt{2}}(800) + \frac{1}{\sqrt{17}}(583.0952) = 0$$

$$P = 848.5297 \text{ lb}$$

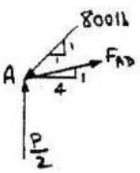

Joint D:

$$+\uparrow\Sigma F_y = 0; \quad -848.5297 - 583.0952(2)\left(\frac{1}{\sqrt{17}}\right) + F_{DB} = 0$$

$$F_{BD} = 1131.3724 \text{ lb} < 2000 \text{ lb} \quad \text{OK}$$

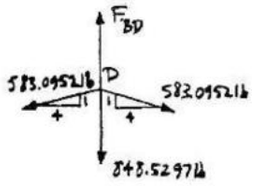

Thus, $P_{max} = 849$ lb **Ans**

www.e-kitabi.com

c03.qxd 6/24/08 2:56 PM Page 60

© 2009 by R.C. Hibbeler. Published by Pearson Prentice Hall, Pearson Education, Inc., Upper Saddle River, NJ. All rights reserved. This material is protected under all copyright laws as they currently exist. No portion of this material may be reproduced, in any form or by any means, without permission in writing from the publisher.

3–23. The three-member truss is used to support the vertical load **P**. Determine the angle θ so that a maximum tension for 1.25**P** is not exceeded and a maximum compression force 0.8**P** is not exceeded.

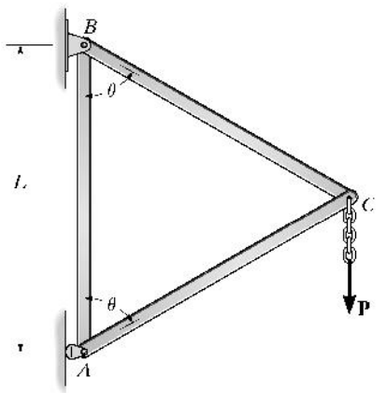

Entire truss :

$$\zeta + \Sigma M_B = 0;\ A_y(L) - P\left(\frac{L}{2}\tan\theta\right) = 0$$

$$A_y = \frac{P}{2}\tan\theta$$

Joint *A* :

$$\stackrel{+}{\rightarrow}\Sigma F_x = 0;\ \frac{P}{2}\tan\theta - F_{AC}\sin\theta = 0$$

$$F_{AC} = \frac{P}{2}\frac{1}{\cos\theta}\ (\mathrm{C})$$

$$+\uparrow \Sigma F_y = 0;\ F_{AB} - \frac{P}{2}\frac{1}{\cos\theta}(\cos\theta) = 0$$

$$F_{AB} = \frac{P}{2}\ (\mathrm{T})$$

Joint *C* :

$$\stackrel{+}{\rightarrow}\Sigma F_x = 0;\ -F_{BC}\sin\theta + \frac{P}{2}\frac{1}{\cos\theta}(\sin\theta) = 0$$

$$F_{BC} = \frac{P}{2}\frac{1}{\cos\theta}\ (\mathrm{T})$$

For compression requirement

$$0.8P \geq \frac{P}{2}\frac{1}{\cos\theta}$$

$$\theta \leq 51.3°$$

For tension requirement,

$$1.25P \geq \frac{P}{2}\frac{1}{\cos\theta}$$

$$\theta \leq 66.4°$$

Thus,

$$\theta \leq 51.3°$$ **Ans**

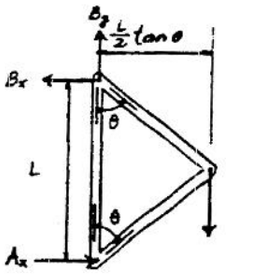

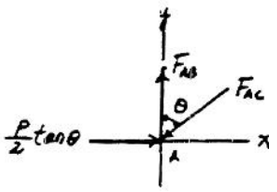

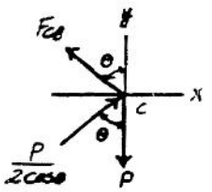

www.e-kitabi.com

c03.qxd 6/24/08 2:56 PM Page 61

© 2009 by R.C. Hibbeler. Published by Pearson Prentice Hall, Pearson Education, Inc., Upper Saddle River, NJ. All rights reserved. This material is protected under all copyright laws as they currently exist. No portion of this material may be reproduced, in any form or by any means, without permission in writing from the publisher.

***3–24.** Determine the force in members *GF*, *FB*, and *BC* of the *Fink truss* and state if the members are in tension or compression.

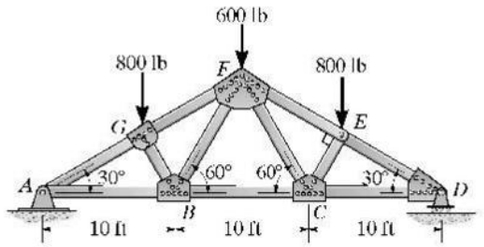

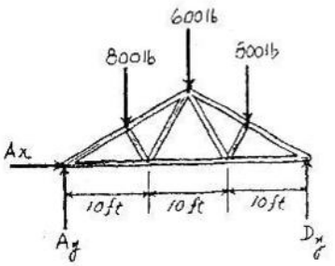

Support Reactions : Due to symmetry, $D_y = A_y$.

$+\uparrow \Sigma F_y = 0;\quad 2A_y - 800 - 600 - 800 = 0 \quad A_y = 1100\ \text{lb}$

$\overset{+}{\rightarrow} \Sigma F_x = 0;\quad A_x = 0$

Method of Sections :

$\circlearrowleft + \Sigma M_B = 0;\quad F_{GF}\sin 30°(10) + 800\left(10 - 10\cos^2 30°\right) - 1100(10) = 0$

$F_{GF} = 1800\ \text{lb (C)} = 1.80\ \text{k (C)}$ **Ans**

$\circlearrowleft + \Sigma M_A = 0;\quad F_{FB}\sin 60°(10) - 800\left(10\cos^2 30°\right) = 0$

$F_{FB} = 692.82\ \text{lb (T)} = 693\ \text{lb (T)}$ **Ans**

$\circlearrowleft + \Sigma M_F = 0;\quad F_{BC}(15\tan 30°) + 800\left(15 - 10\cos^2 30°\right) - 1100(15) = 0$

$F_{BC} = 1212.43\ \text{lb (T)} = 1.21\ \text{k (T)}$ **Ans**

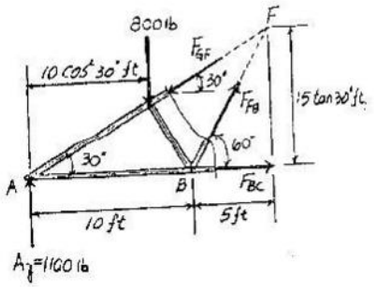

3–25. Determine the force in members *GF*, *CF*, and *CD* of the roof truss and indicate if the members are in tension or compression.

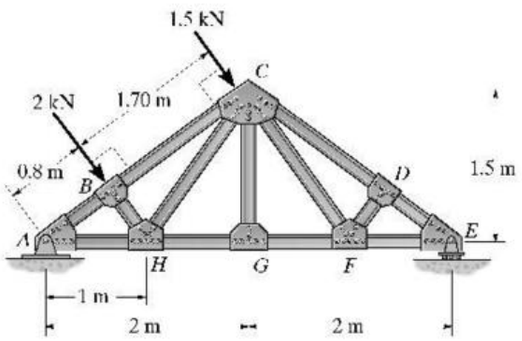

$\circlearrowleft + \Sigma M_A = 0;\quad E_y(4) - 2(0.8) - 1.5(2.50) = 0 \quad E_y = 1.3375\ \text{kN}$

Method of Sections :

$\circlearrowleft + \Sigma M_C = 0;\quad 1.3375(2) - F_{GF}(1.5) = 0$

$F_{GF} = 1.78\ \text{kN (T)}$ **Ans**

$\circlearrowleft + \Sigma M_F = 0;\quad 1.3375(1) - F_{CD}\left(\frac{3}{5}\right)(1) = 0$

$F_{CD} = 2.23\ \text{kN (C)}$ **Ans**

$\circlearrowleft + \Sigma M_E = 0;\quad F_{CF}\left(\frac{1.5}{\sqrt{3.25}}\right)(1) = 0 \quad F_{CF} = 0$ **Ans**

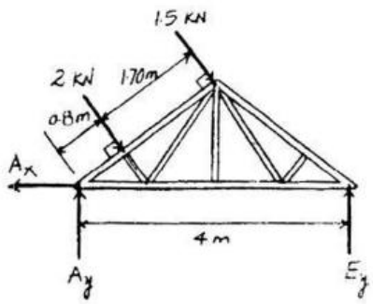

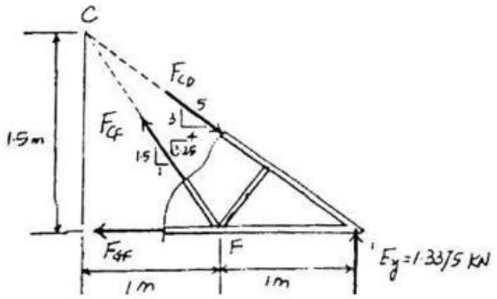

www.e-kitabi.com

© 2009 by R.C. Hibbeler. Published by Pearson Prentice Hall, Pearson Education, Inc., Upper Saddle River, NJ. All rights reserved. This material is protected under all copyright laws as they currently exist. No portion of this material may be reproduced, in any form or by any means, without permission in writing from the publisher.

3–26. Classify the truss and determine if it is stable.

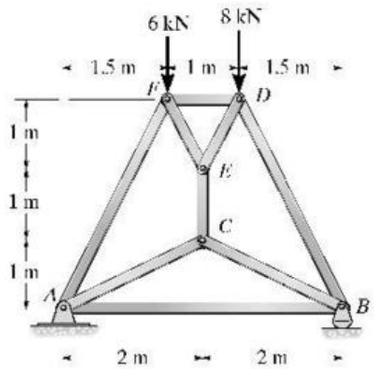

Compound truss **Ans**

where *ACB* and *FED* are connected by three bars *FA*, *EC*, and *DB*.

Since

$b + r = 2j$

$9 + 3 = 2(6) = 12$

Statically determinate

$\zeta + \Sigma M_O = 6(0.5) - 8(0.5) \neq 0$

Truss is unstable internally. **Ans**

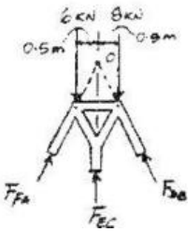

3–27. Determine the force in each member of the truss. State if the members are in tension or compression. Assume all members are pin connected.

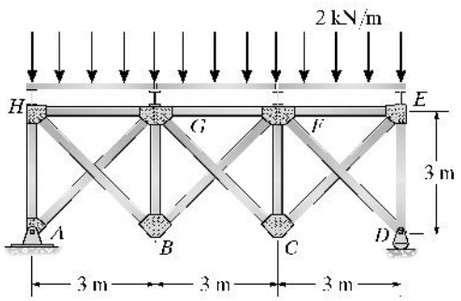

Reactions :

$A_x = 0$, $A_y = 9.00$ kN, $D_y = 9.0$ kN

Joint *A* :

$\stackrel{+}{\rightarrow}\Sigma F_x = 0;\ F_{AG}\cos 45° = 0$

$F_{AG} = 0$ **Ans**

$+\uparrow \Sigma F_y = 0;\ -F_{AH} + 9.00 = 0$

$F_{AH} = 9.00$ kN (C) **Ans**

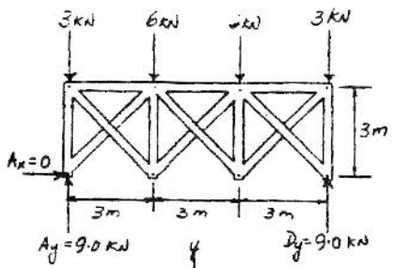

Joint *H* :

$+\uparrow \Sigma F_y = 0;\quad 9.00 - 3 - F_{HB}\sin 45° = 0$

$F_{HB} = 8.485$ kN $= 8.49$ kN (T) **Ans**

$\stackrel{+}{\rightarrow}\Sigma F_x = 0;\quad 8.485\cos 45° - F_{HG} = 0$

$F_{HG} = 6.00$ kN (C) **Ans**

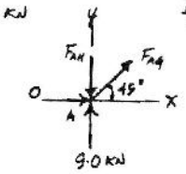

Joint *B* :

$\stackrel{+}{\rightarrow}\Sigma F_x = 0;\ F_{BF}\cos 45° - 8.485\sin 45° = 0$

$F_{BF} = 8.485$ kN $= 8.49$ kN (T) **Ans**

$+\uparrow \Sigma F_y = 0;\ 8.485\cos 45° + 8.485\sin 45° - F_{BG} = 0$

$F_{BG} = 12.0$ kN (C) **Ans**

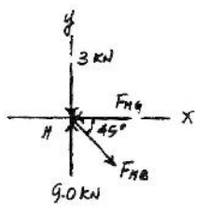

Joint *G* :

$\stackrel{+}{\rightarrow}\Sigma F_x = 0;\ 6 + 8.485\cos 45° - F_{GF} = 0$

$F_{GF} = 12$ kN (C) **Ans**

$+\uparrow \Sigma F_y = 0;\quad -F_{GC}\sin 45° - 6 + 12.0 = 0$

$F_{GC} = 8.485$ kN $= 8.49$ kN (T) **Ans**

Due to symmetrical loading and geometry :

$F_{DF} = F_{AG} = 0$ **Ans**

$F_{DE} = F_{AH} = 9.00$ kN (C) **Ans**

$F_{EC} = F_{HB} = 8.49$ kN (T) **Ans**

$F_{EF} = F_{HG} = 6.00$ kN (C) **Ans**

$F_{CF} = F_{BG} = 12.0$ kN (C) **Ans**

$F_{FB} = F_{GC} = 8.49$ kN (T) **Ans**

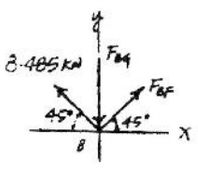

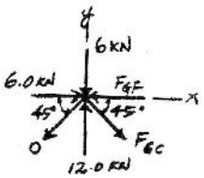

www.e-kitabi.com

c03.qxd 6/24/08 2:56 PM Page 63

© 2009 by R.C. Hibbeler. Published by Pearson Prentice Hall, Pearson Education, Inc., Upper Saddle River, NJ. All rights reserved. This material is protected under all copyright laws as they currently exist. No portion of this material may be reproduced, in any form or by any means, without permission in writing from the publisher.

***3–28.** Specify the type of compound truss and determine the force in members *JH*, *BJ*, and *BI*. State if the members are in tension or compression. The internal angle between any two members is 60°. The truss is pin supported at *A* and roller supported at *F*. Assume all members are pin connected.

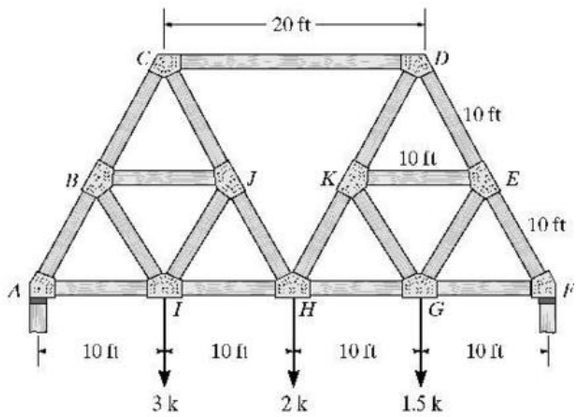

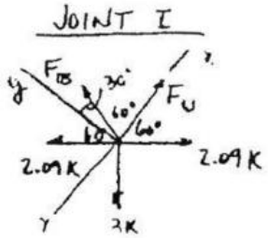

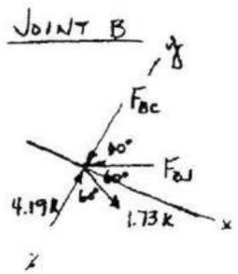

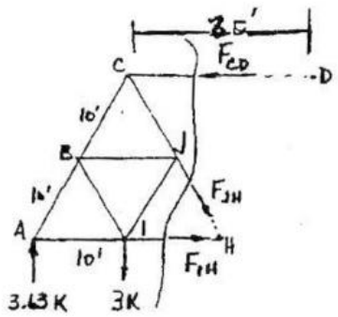

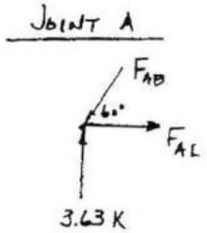

Type I

$\curvearrowleft + \Sigma M_C = 0;$ $\quad 3.63(10) - F_{IH}(17.32) = 0;\ F_{IH} = 2.09\ \text{k(T)}$

$\curvearrowleft + \Sigma M_D = 0;$ $\quad 3.63(30) - 3(20) - 2.09(17.32) - F_{JH}\cos 30°(20) = 0$

$F_{JH} = 0.722\ \text{k(T)}$ **Ans**

Joint *A* :

$+\uparrow \Sigma F_y = 0;$ $\quad F_{AB} = \dfrac{3.36}{\sin 60°} = 4.19\ \text{k(C)}$

$\pm \Sigma F_x = 0;$ $\quad F_{AJ} = 4.19(\cos 60°) = 2.09\ \text{k(T)}$

Joint *I* :

$+\downarrow \Sigma F_y = 0;$ $\quad -F_{IB}\cos 30° + 2.09(\cos 30°) + 3(\cos 60°) - 2.09(\cos 30°) = 0$

$F_{IB} = 1.73\ \text{k(T)}$ **Ans**

Joint *B* :

$+\searrow \Sigma F_x = 0;$ $\quad 1.73(\cos 30°) - F_{BJ}(\cos 30°) = 0$

$F_{BJ} = 1.73\ \text{k(C)}$ **Ans**

www.e-kitabi.com

c03.qxd 6/24/08 2:56 PM Page 64

© 2009 by R.C. Hibbeler. Published by Pearson Prentice Hall, Pearson Education, Inc., Upper Saddle River, NJ. All rights reserved. This material is protected under all copyright laws as they currently exist. No portion of this material may be reproduced, in any form or by any means, without permission in writing from the publisher.

3–29. Specify the type of compound truss. Trusses *ACE* and *BDF* are connected by three bars *CF*, *ED*, and *CD*. Determine the force in each member and state if the members are in tension or compression.

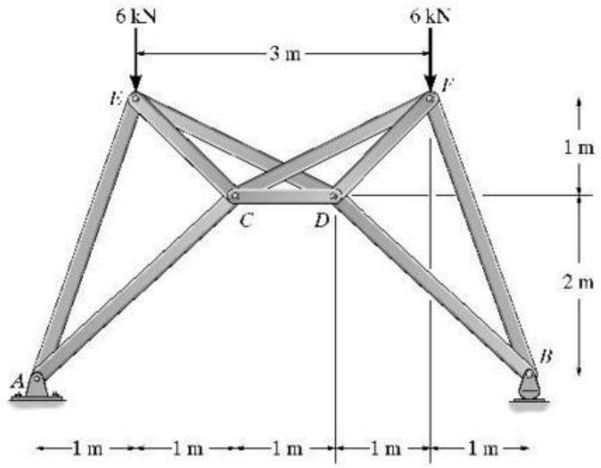

Type 2

$\left(+\Sigma M_G = 0;\right)$ $2.5(6) - 1.5(6) - 0.25F_{CD} = 0$

$F_{CD} = 24.0\ \text{kN(T)}$ **Ans**

$\left(+\Sigma M_D = 0;\right)$ $3(6) - 2(6) - F_{CF}\sin 26.56° = 0$

$F_{CF} = 13.4\ \text{kN(C)}$ **Ans**

$\left(+\Sigma M_C = 0;\right)$ $2(6) - 1(6) - \sqrt{2}F_{ED}\sin 18.43° = 0$

$F_{ED} = 13.42 = 13.4\ \text{kN(C)}$ **Ans**

Joint *A* :

$+\rightarrow \Sigma F_x = 0;$ $F_{AC}\cos 45° - F_{AE}\cos 71.56° = 0$

$+\uparrow \Sigma F_y = 0;$ $6 + F_{AC}\sin 45° - F_{AE}\sin 71.56° = 0$

$F_{AE} = 9.49\ \text{kN(C)} = F_{BF}$ **Ans**

$F_{AC} = 4.24\ \text{kN(C)} = F_{BC}$ **Ans**

Joint *C* :

$+\rightarrow \Sigma F_x = 0;$ $24 - 13.42(\cos 26.56°) - F_{EC}(\cos 45°) - 4.24\cos 45° = 0$

$F_{EC} = 12.7\ \text{kN(T)} = F_{DF}$ **Ans**

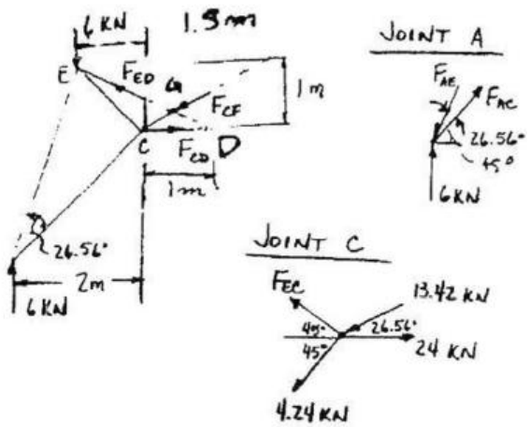

www.e-kitabi.com

c03.qxd 6/24/08 2:56 PM Page 65

© 2009 by R.C. Hibbeler. Published by Pearson Prentice Hall, Pearson Education, Inc., Upper Saddle River, NJ. All rights reserved. This material is protected under all copyright laws as they currently exist. No portion of this material may be reproduced, in any form or by any means, without permission in writing from the publisher.

3–30. Specify the type of compound truss and determine the force in each member. State if the members are in tension or compression. Assume the members are pin connected.

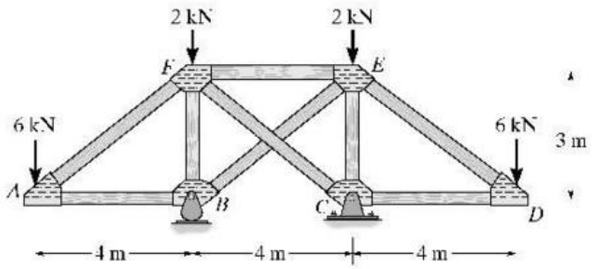

Type 2 truss

$\curvearrowleft + \Sigma M_F = 0;\quad F_{BE}\left(\frac{4}{5}\right)(3) - 6(4) = 0$

$F_{BE} = 10\ \text{kN (C)}$ **Ans**

$+\uparrow \Sigma F_y = 0;\quad F_{FC} = 10\ \text{kN (C)}$ **Ans**

$\pm \Sigma F_x = 0;\quad F_{FE} - (2)(10)\left(\frac{4}{5}\right) = 0;\ F_{FE} = 16\ \text{kN (T)}$ **Ans**

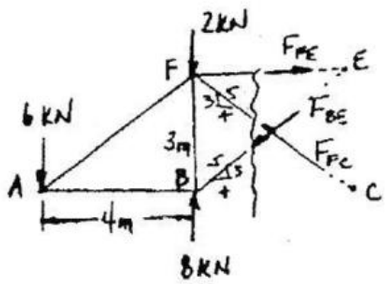

Joint B:

$\pm \Sigma F_x = 0;\quad 10\left(\frac{4}{5}\right) - F_{AB} = 0$

$F_{AB} = 8\ \text{kN (C)}$ **Ans**

$+\downarrow \Sigma F_y = 0;\quad 10\left(\frac{3}{5}\right) - 8 + F_{FB} = 0$

$F_{FB} = 2\ \text{kN (C)}$ **Ans**

JOINT B

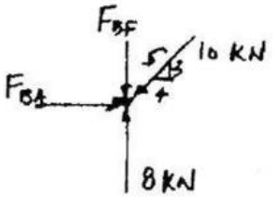

Joint F:

$+\uparrow \Sigma F_y = 0;\quad 10\left(\frac{3}{5}\right) - \frac{3}{5}F_{AF} = 0$

$F_{AF} = 10\ \text{kN (T)}$ **Ans**

JOINT F

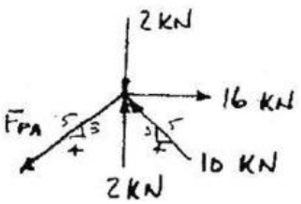

By symmetry,

$F_{ED} = 10\ \text{kN (T)}$ **Ans**

$F_{EC} = 2\ \text{kN (C)}$ **Ans**

$F_{CD} = 8\ \text{kN (C)}$ **Ans**

www.e-kitabi.com

c03.qxd 6/24/08 2:57 PM Page 66

© 2009 by R.C. Hibbeler. Published by Pearson Prentice Hall, Pearson Education, Inc., Upper Saddle River, NJ. All rights reserved. This material is protected under all copyright laws as they currently exist. No portion of this material may be reproduced, in any form or by any means, without permission in writing from the publisher.

3–31. Determine the forces in members *IH*, *AH*, and *BC* of truss. State if the members are in tension or compression.

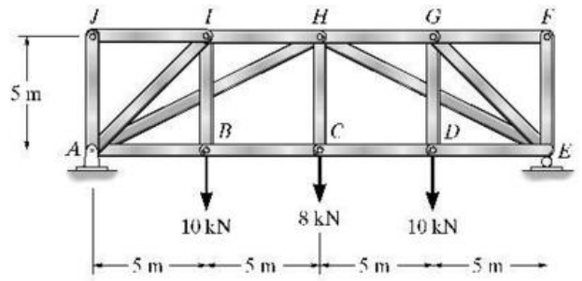

$\circlearrowleft +\Sigma M_A = 0;$ $\quad F_{IH}(5\text{ m}) - 10\text{ kN}(5\text{ m}) = 0$

$F_{IH} = 10\text{ kN (C)}$ **Ans**

$\circlearrowleft +\Sigma M_H = 0;$ $\quad F_{BC}(5\text{ m}) + 10\text{ kN}(5\text{ m}) - 14\text{ kN}(10\text{ m}) = 0$

$F_{BC} = 18\text{ kN (T)}$ **Ans**

$\uparrow +\Sigma F_y = 0;$ $\quad 14\text{ kN} - 10\text{ kN} - F_{AH}\sin 26.56° = 0$

$F_{AH} = 8.94\text{ kN (C)}$ **Ans**

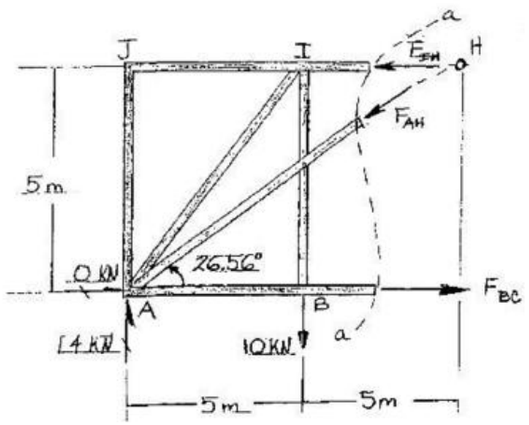

***3–32.** Determine the force in each member. State if the members are in tension or compression.

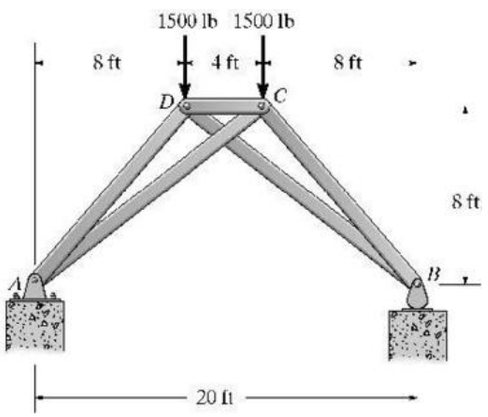

Joint *A* :

$\stackrel{+}{\rightarrow}\Sigma F_x = 0;$ $\quad F_{AC}\cos 33.69° - F_{AD}\cos 45° = 0$

$+\uparrow \Sigma F_y = 0;$ $\quad 1500 - F_{AD}\sin 45° + F_{AC}\sin 33.69° = 0$

$F_{AC} = 5408.3\text{ lb} = 5.41\text{ k (T)}$ **Ans**

$F_{AD} = 6363.9\text{ lb} = 6.36\text{ k (C)}$ **Ans**

Joint *D* :

$+\uparrow \Sigma F_y = 0;$ $\quad 6363.9\sin 45° - 1500 - F_{DB}\sin 33.69° = 0$

$F_{DB} = 5408.3\text{ lb} = 5.41\text{ k (T)}$ **Ans**

$\stackrel{+}{\rightarrow}\Sigma F_x = 0;$ $\quad 6363.9\cos 45° - F_{DC} + F_{DB}\cos 33.69° = 0$

$F_{DC} = 9000\text{ lb} = 9.00\text{ k (C)}$ **Ans**

By symmetry, $F_{CB} = 6363.9\text{ lb} = 6.36\text{ k (C)}$ **Ans**

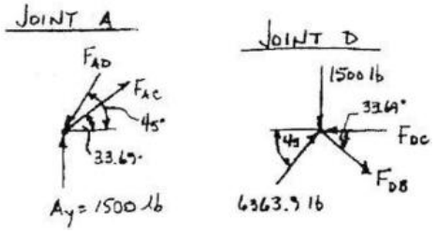

www.e-kitabi.com

c03.qxd 6/24/08 2:57 PM Page 67

© 2009 by R.C. Hibbeler. Published by Pearson Prentice Hall, Pearson Education, Inc., Upper Saddle River, NJ. All rights reserved. This material is protected under all copyright laws as they currently exist. No portion of this material may be reproduced, in any form or by any means, without permission in writing from the publisher.

3–33. Determine the force in each member. State if the members are in tension or compression.

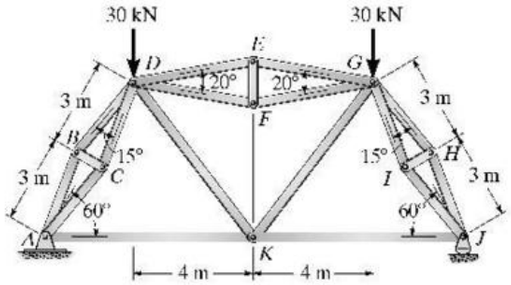

Reactions :

$A_x = 0, \quad A_y = 30.0 \text{ kN}, \quad J_y = 30.0 \text{ kN}$

Joint A :

$+\uparrow \Sigma F_y = 0; \quad -F_{AD} \sin 60° + 30.0 = 0$

$F_{AD} = 34.64 \text{ kN (C)}$

$\pm \Sigma F_x = 0; \quad F_{AK} - 34.64 \cos 60° = 0$

$F_{AK} = 17.3 \text{ kN (T)}$ **Ans**

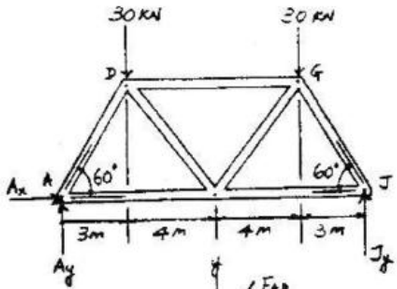

Joint D :

$+\uparrow \Sigma F_y = 0; \quad F_{DK} \sin 52.41° + 34.64 \sin 60° - 30 = 0$

$F_{DK} = 0$ **Ans**

$\pm \Sigma F_x = 0; \quad -F_{DG} + 34.64 \cos 60° = 0$

$F_{DG} = 17.3 \text{ kN (C)}$ **Ans**

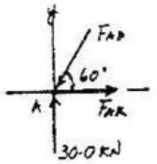

Joint A :

$\nwarrow \Sigma F_x = 0; \quad F_{AC} = F_{AB} = F$

$\nearrow \Sigma F_y = 0; \quad -2F \cos 7.5° + 34.64 = 0; \quad F = 17.47 \text{ kN (C)}$

$F_{AC} = 17.5 \text{ kN (C)}$ **Ans**

$F_{AB} = 17.5 \text{ kN (C)}$ **Ans**

Due to symmetrical loading and geometry

$F_{GK} = F_{DK} = 0$ **Ans**

$F_{JK} = F_{AK} = 17.3 \text{ kN (T)}$

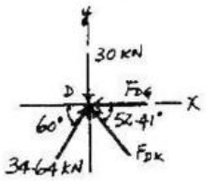

Joint B :

$\nearrow \Sigma F_y = 0; \quad 17.47 \cos 7.5° - F_{BD} \cos 7.5° = 0;$

$F_{BD} = 17.47 \text{ kN} = 17.5 \text{ kN (C)}$ **Ans**

$\nwarrow \Sigma F_x = 0; \quad F_{BC} - 2(17.47 \sin 7.5°) = 0$

$F_{BC} = 4.56 \text{ kN (T)}$ **Ans**

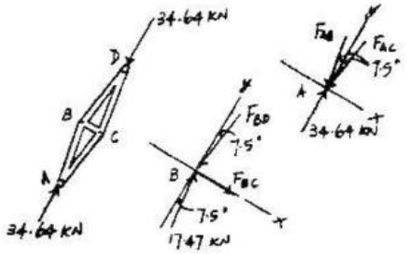

Due to symmetrical loading and geometry

$F_{CD} = F_{IG} = F_{HG} = F_{IJ} = F_{HJ} = 17.5 \text{ kN (C)}$ **Ans**

$F_{IH} = 4.56 \text{ kN (T)}$ **Ans**

Joint D :

$+\uparrow \Sigma F_y = 0; \quad F_{DF} = F_{DE} = F$

$\pm \Sigma F_x = 0; \quad -2F \cos 10° + 17.32 = 0; \quad F = 8.794 \text{ kN (C)}$

$F_{DE} = F_{DF} = 8.79 \text{ kN (C)}$ **Ans**

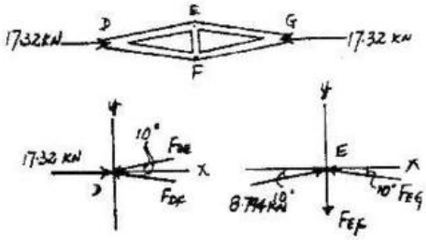

Joint E :

$\pm \Sigma F_x = 0; \quad 8.794 \cos 10° - F_{EG} \cos 10° = 0$

$F_{EG} = 8.794 \text{ kN} = 8.79 \text{ kN (C)}$ **Ans**

$+\uparrow \Sigma F_y = 0; \quad -F_{EF} + 2(8.794 \sin 10°) = 0$

$F_{EF} = 3.05 \text{ kN (T)}$ **Ans**

Due to symmetrical loading and geometry

$F_{FG} = F_{EG} = 8.79 \text{ kN (C)}$ **Ans**

www.e-kitabi.com

c03.qxd 6/24/08 2:57 PM Page 68

© 2009 by R.C. Hibbeler. Published by Pearson Prentice Hall, Pearson Education, Inc., Upper Saddle River, NJ. All rights reserved. This material is protected under all copyright laws as they currently exist. No portion of this material may be reproduced, in any form or by any means, without permission in writing from the publisher.

3–34. Determine the forces in all the members of the lattice (complex) truss. State if the members are in tension or compression. *Suggestion:* Substitute member *JE* by one placed between *K* and *F*.

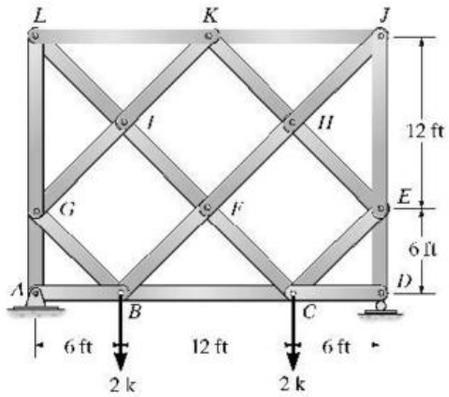

Superposition required :

$S_{FE} = S'_{FK} + xs'_{FK} = 0$

$2 + x(1) = 0$

$x = -2$

Member	S_i'	s_i'	xs_i'	S_i
JH	0	−1.414	2.828	2.83 (T)
JK	0	1.0	−2.0	2.0 (C)
DC	0	0	0	0
DE	−2.0	0	0	2.0 (C)
EC	1.414	0.7071	−1.414	0
EH	−1.414	−0.7071	1.414	0
CF	1.414	−0.7071	1.414	2.83 (T)
CB	0	1.0	−2.0	2.0 (C)
AG	−2.0	0	0	2.0 (C)
AB	0	0	0	0
BG	1.414	0.7071	−1.414	0
BF	1.414	−0.7071	1.414	2.83 (T)
GI	−1.414	−0.7071	1.414	0
GL	0	1.0	−2.0	2.0 (C)
LK	0	1.0	−2.0	2.0 (C)
LI	0	−1.414	2.828	2.83 (T)
IF	0	−1.414	2.828	2.83 (T)
IK	−1.414	−0.7071	1.414	0
HF	0	−1.414	2.828	2.83 (T)
HK	−1.414	−0.7071	1.414	0
JE	0	1.0	−2.0	2.0 (C)

Ans

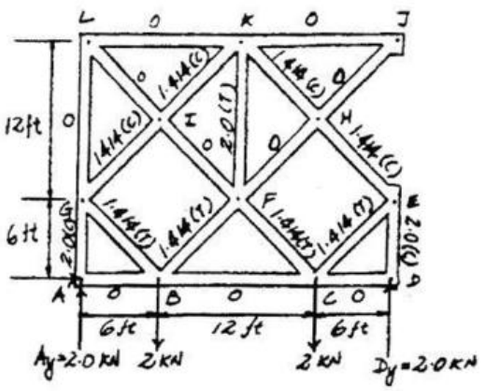

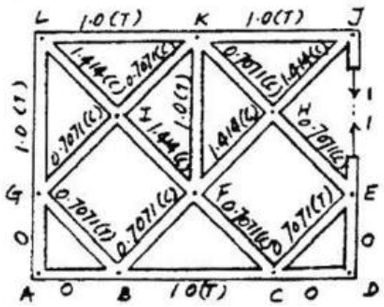

www.e-kitabi.com

c03.qxd 6/24/08 2:57 PM Page 69

© 2009 by R.C. Hibbeler. Published by Pearson Prentice Hall, Pearson Education, Inc., Upper Saddle River, NJ. All rights reserved. This material is protected under all copyright laws as they currently exist. No portion of this material may be reproduced, in any form or by any means, without permission in writing from the publisher.

3–35. Determine the forces in all the members of the complex truss. State if the members are in tension or compression. Assume all members are pin connected.

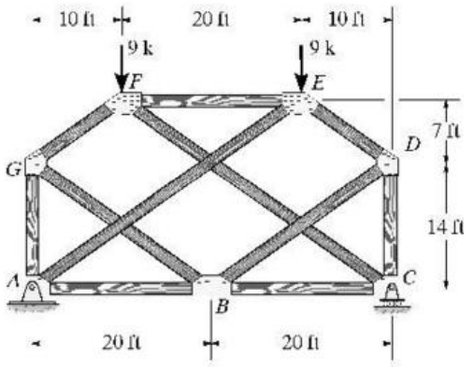

Superposition required :

$S_{GE} = S'_{GE} + xs_{GE}' = 0$

$19.8 + 1.262(x) = 0$

$x = -15.694$

Member	S_i'	s_i'	xS_i'	S_i
CB	0	−0.8192	12.85	12.9 (T)
CD	−9.00	−0.5735	9.00	0
DB	7.847	0.5	−7.847	0
DE	−7.847	−0.5	7.847	0
BG	−7.847	−0.5	7.847	0
BA	12.857	0	0	12.9 (T)
AE	−15.694	0	0	15.7 (C)
AG	0	0	0	0
FG	−15.694	−1.00	15.69	0
FE	−12.857	−1.638	25.71	12.9 (T)
CF	0	1.0	−15.69	15.7 (C)

Ans

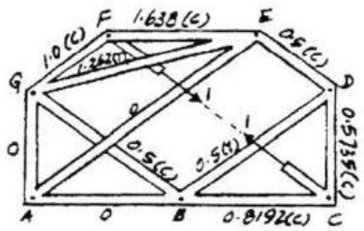

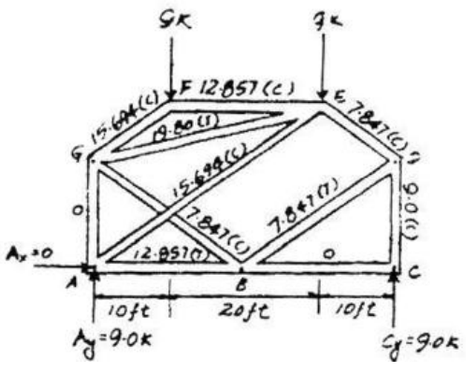

***3–36.** Determine the force in members *JI*, *DI*, and *DE* of the *Pratt* truss. State if the members are in tension or compression. Assume all members are pin connected.

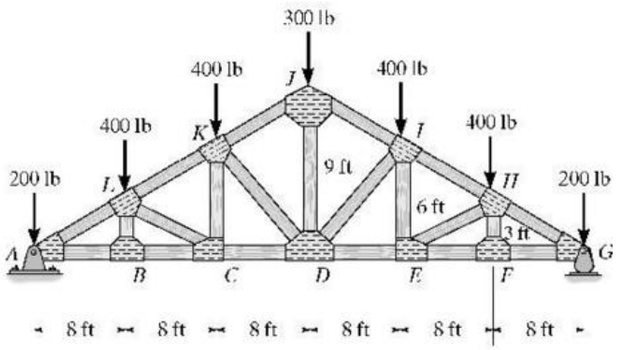

$\zeta + \Sigma M_I = 0;$ $\quad 200(16) - 1150(16) + F_{DE}(6) + 8(400) = 0$

$F_{DE} = 2{,}000 \text{ lb} = 2.00 \text{ k (T)}$ **Ans**

$\zeta + \Sigma M_G = 0;$ $\quad F_{DI}\left(\frac{3}{5}\right)(24) - 400(16) - 400(8) = 0$

$F_{DI} = 666.7 \text{ lb} = 667 \text{ lb (C)}$ **Ans**

$\zeta + \Sigma M_D = 0;$ $\quad 400(8) + 400(16) + 200(24) - 1150(24) - F_{JI}\left(\frac{3}{\sqrt{73}}\right)(24) = 0$

$F_{JI} = 1566.4 \text{ lb} = 1.57 \text{ k (C)}$ **Ans**

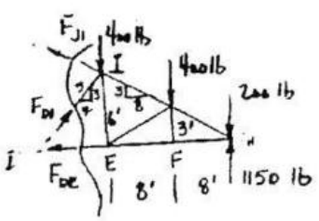

www.e-kitabi.com

c03.qxd 6/24/08 2:57 PM Page 70

© 2009 by R.C. Hibbeler. Published by Pearson Prentice Hall, Pearson Education, Inc., Upper Saddle River, NJ. All rights reserved. This material is protected under all copyright laws as they currently exist. No portion of this material may be reproduced, in any form or by any means, without permission in writing from the publisher.

3–37. The wooden headframe is subjected to the loading shown. Determine the forces in members *JI*, *JD*, and *ID*. State if the members are in tension or compression.

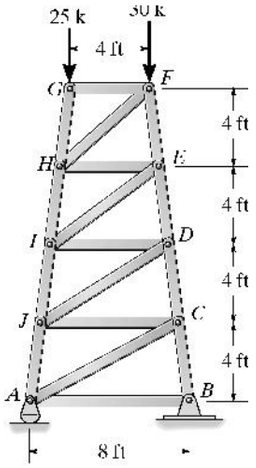

$\zeta + \Sigma M_D = 0; \quad -F_{JI}\cos 7.125°(6) + 25(5) + 30(1) = 0$

$F_{JI} = 26.0\ \text{k (C)}$ **Ans**

$\zeta + \Sigma M_O = 0; \quad F_{JD}\cos 31.61°(24) + F_{JD}\sin 31.61°(3) - 30(2) + 25(2) = 0$

$F_{JD} = 0.4543\ \text{k} = 0.454\ \text{k (C)}$ **Ans**

$\zeta + \Sigma M_J = 0; \quad F_{CD}\cos 7.125°(7) - 25(1.5) - 30(5.5) = 0$

$F_{CD} = 29.15\ \text{k (C)}$

Joint *D*:

$+\nearrow \Sigma F_x = 0; \quad 0.4543\cos 24.48° - F_{ID}\cos 7.125° = 0$

$F_{ID} = 0.417\ \text{k (T)}$ **Ans**

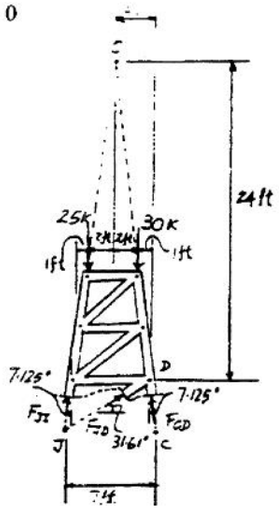

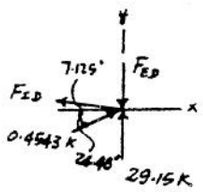

3–38. The wooden headframe is subjected to the loading shown. Determine the forces in members *HI*, *ED*, and *EI*. State if the members are in tension or compression.

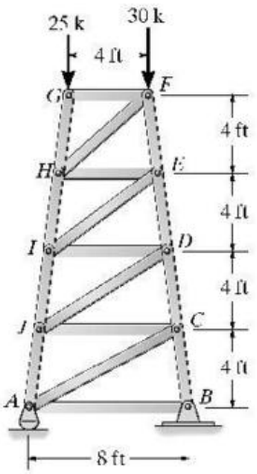

$\zeta + \Sigma M_O = 0; \ 25(2) - 30(2) + F_{EI}\cos 36.03°(20) + F_{EI}\sin 36.03°(2.5) = 0$

$F_{EI} = 0.567\ \text{k (C)}$ **Ans**

$\zeta + \Sigma M_E = 0; \ 30(0.5) + 25(4.5) - F_{HI}\cos 7.125°(5) = 0$

$F_{HI} = 25.7\ \text{k (C)}$ **Ans**

$\zeta + \Sigma M_I = 0; \ -25(1) - 30(5) + F_{ED}\cos 7.125°(6) = 0$

$F_{ED} = 29.4\ \text{k (C)}$ **Ans**

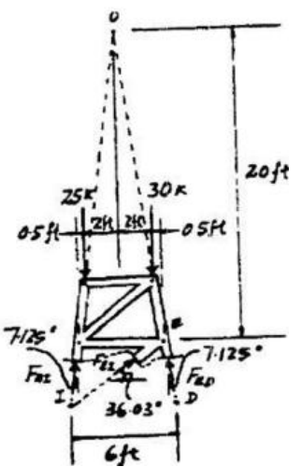

www.e-kitabi.com

© 2009 by R.C. Hibbeler. Published by Pearson Prentice Hall, Pearson Education, Inc., Upper Saddle River, NJ. All rights reserved. This material is protected under all copyright laws as they currently exist. No portion of this material may be reproduced, in any form or by any means, without permission in writing from the publisher.

3–39. Determine the force in members *EI*, *EP*, and *LK* of the *Baltimore bridge truss* and state if the members are in tension or compression. Also, indicate all zero-force members.

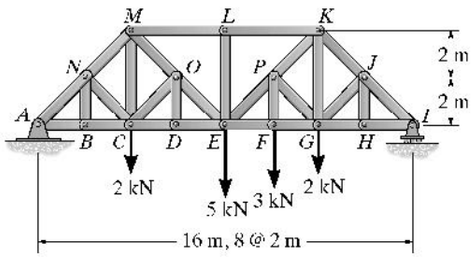

Support Reactions :

$$\zeta + \Sigma M_A = 0; \quad I_y(16) - 2(12) - 3(10) - 5(8) - 2(4) = 0$$
$$I_y = 6.375 \text{ kN}$$

Method of Joints : By inspection, members ***BN***, ***NC***, ***DO***, ***OC***, ***HJ*** ***LE*** and ***JG*** are zero force member's. **Ans**

Method of Sections :

$$\zeta + \Sigma M_K = 0; \quad 3(2) + 6.375(4) - F_{EF}(4) = 0$$
$$F_{EF} = 7.875 \text{ kN (T)} \quad \textbf{Ans}$$

$$\zeta + \Sigma M_E = 0; \quad 6.375(8) - 2(4) - 3(2) - F_{LK}(4) = 0$$
$$F_{LK} = 9.25 \text{ kN (C)} \quad \textbf{Ans}$$

$$+\uparrow \Sigma F_y = 0; \quad 6.375 - 3 - 2 - F_{ED} \sin 45° = 0$$
$$F_{ED} = 1.94 \text{ kN (T)} \quad \textbf{Ans}$$

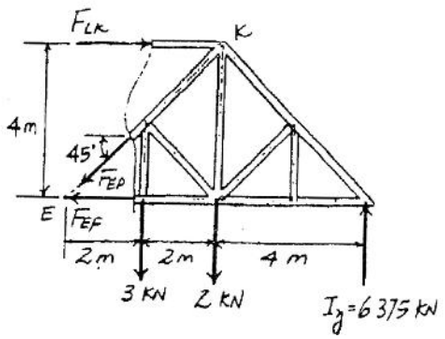

www.e-kitabi.com

© 2009 by R.C. Hibbeler. Published by Pearson Prentice Hall, Pearson Education, Inc., Upper Saddle River, NJ. All rights reserved. This material is protected under all copyright laws as they currently exist. No portion of this material may be reproduced, in any form or by any means, without permission in writing from the publisher.

***3–40.** Determine the force in members HG, BG, and BC of the truss. State if the members are in tension or compression.

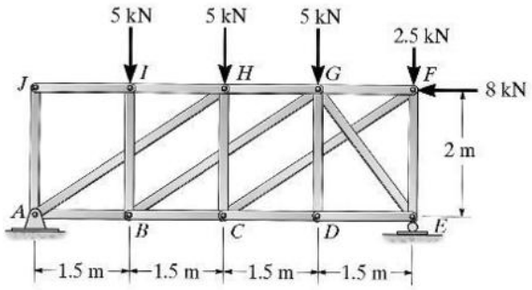

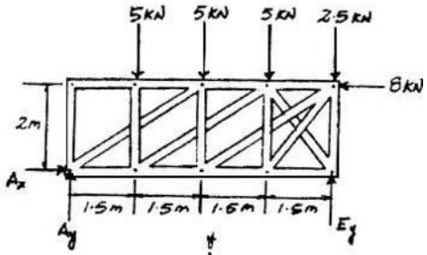

Entire Truss :

$(+\Sigma M_A = 0;\ -5(1.5) - 5(3) - 5(4.5) - 2.5(6) + 8(2) + E_y(6) = 0$

$E_y = 7.333$ kN

$\pm\Sigma F_x = 0;\ A_x - 8 = 0$

$A_x = 8.0$ kN

$+\uparrow\Sigma F_y = 0;\ A_y - 5 - 5 - 5 - 2.5 + 7.333 = 0$

$A_y = 10.167$ kN

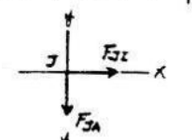

Joint J :

$\pm\Sigma F_x = 0;\ F_{JI} = 0$

$+\uparrow\Sigma F_y = 0;\ F_{JA} = 0$

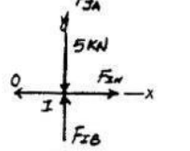

Joint I :

$\pm\Sigma F_x = 0;\ F_{IH} = 0$

$+\uparrow\Sigma F_y = 0;\ F_{IB} - 5 = 0$

$F_{IB} = 5.00$ kN (C)

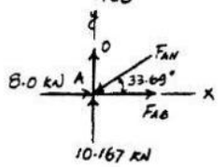

Joint A :

$+\uparrow\Sigma F_y = 0;\ 10.167 - F_{AH}\sin 33.69° = 0$

$F_{AH} = 18.33$ kN (C)

$\pm\Sigma F_x = 0;\ 8.0 - 18.33\cos 33.69° + F_{AB} = 0$

$F_{AB} = 7.25$ kN (T)

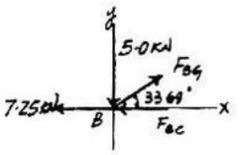

Joint B :

$+\uparrow\Sigma F_y = 0;\ F_{BG}\sin 33.69° - 5.0 = 0$

$F_{BG} = 9.014$ kN $= 9.01$ kN (T) **Ans**

$\pm\Sigma F_x = 0;\ 9.014\cos 33.69° - 7.25 - F_{BC} = 0$

$F_{BC} = 0.25$ kN (C) **Ans**

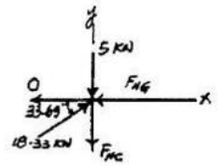

Joint H :

$\pm\Sigma F_x = 0;\ 18.33\cos 33.69° - F_{HG} = 0$

$F_{HG} = 15.25$ kN (C) **Ans**

www.e-kitabi.com

c03.qxd 6/24/08 2:57 PM Page 73

© 2009 by R.C. Hibbeler. Published by Pearson Prentice Hall, Pearson Education, Inc., Upper Saddle River, NJ. All rights reserved. This material is protected under all copyright laws as they currently exist. No portion of this material may be reproduced, in any form or by any means, without permission in writing from the publisher.

3–41. Determine the force in members BG, HG, and BC of the truss and state if the members are in tension or compression.

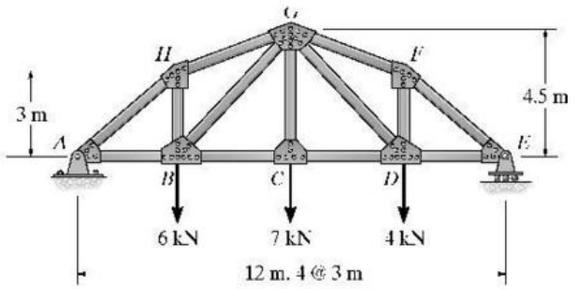

$\zeta + \Sigma M_E = 0;\quad 6(9) + 7(6) + 4(3) - A_y(12) = 0 \quad A_y = 9.00\ \text{kN}$

$\overset{+}{\rightarrow} \Sigma F_x = 0;\quad A_x = 0$

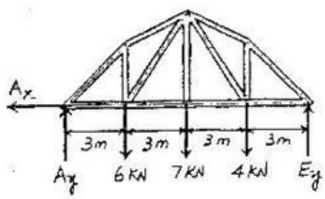

Method of Sections :

$\zeta + \Sigma M_G = 0;\quad F_{BC}(4.5) + 6(3) - 9(6) = 0$

$F_{BC} = 8.00\ \text{kN (T)}$ **Ans**

$\zeta + \Sigma M_B = 0;\quad F_{HG}\left(\frac{1}{\sqrt{5}}\right)(6) - 9(3) = 0$

$F_{HG} = 10.1\ \text{kN (C)}$ **Ans**

$\zeta + \Sigma M_O = 0;\quad F_{BG}\left(\frac{1.5}{\sqrt{3.25}}\right)(6) + 9(3) - 6(6) = 0$

$F_{BG} = 1.80\ \text{kN (T)}$ **Ans**

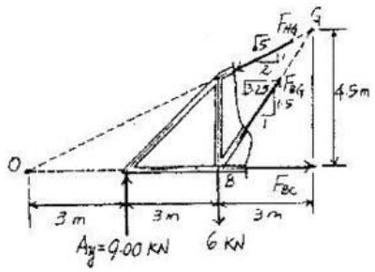

3–42. The Warren truss is used to support the roof of an industrial building. The truss is simply supported on masonry walls at A and G so that only vertical reactions occur at these supports. Determine the force in members LD, CD, and KD. State if the members are in tension or compression. Assume all members are pin connected.

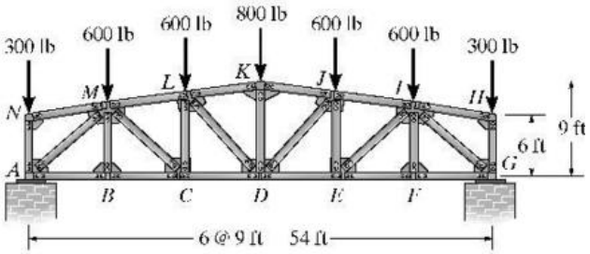

$\zeta + \Sigma M_L = 0;\quad 18(1.9) - 18(0.3) - 9(0.6) - 8F_{CD} = 0$

$F_{CD} = 2.925 = 2.92\ \text{k(T)}$ **Ans**

$\overset{+}{\rightarrow} \Sigma F_x = 0;\quad \frac{9}{\sqrt{145}}F_{LD} - \frac{9}{\sqrt{82}}F_{LK} + 2.925 = 0$

$+\uparrow \Sigma F_y = 0;\quad 1.9 - 0.3 - 0.6 - 0.6 - \frac{8}{\sqrt{145}}F_{LD} - \frac{1}{\sqrt{82}}F_{LK} = 0$

$F_{LK} = 3.02\ \text{k(C)}$

$F_{LD} = 0.100\ \text{k(T)}$ **Ans**

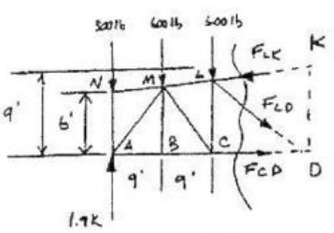

Joint K :

$+\uparrow \Sigma F_y = 0;\quad 2\left(\frac{1}{\sqrt{82}}\right)(3.02) + F_{DK} - 0.8 = 0$

$F_{DK} = 0.133\text{k(C)}$ **Ans**

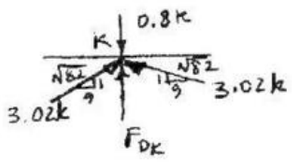

www.e-kitabi.com

c03.qxd 6/24/08 2:57 PM Page 74

© 2009 by R.C. Hibbeler. Published by Pearson Prentice Hall, Pearson Education, Inc., Upper Saddle River, NJ. All rights reserved. This material is protected under all copyright laws as they currently exist. No portion of this material may be reproduced, in any form or by any means, without permission in writing from the publisher.

3–43. Determine the force in members *KJ*, *NJ*, *ND*, and *CD* of the *K truss*. Indicate if the members are in tension or compression.

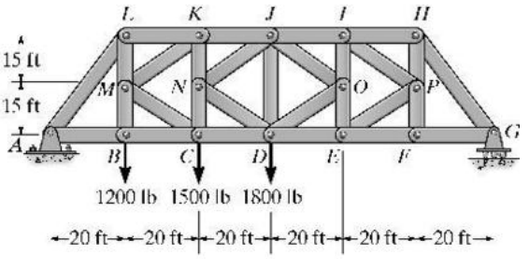

Support Reactions :

$$\zeta + \Sigma M_G = 0; \quad 1.20(100) + 1.50(80) + 1.80(60) - A_y(120) = 0$$
$$A_y = 2.90 \text{ k}$$

$$\overset{+}{\rightarrow} \Sigma F_x = 0; \quad A_x = 0$$

Method of Sections : From section $a-a$, F_{KJ} and F_{CD} can be obtained directly by summing moment about points *C* and *K* respectively.

$$\zeta + \Sigma M_C = 0; \quad F_{KJ}(30) + 1.20(20) - 2.90(40) = 0$$
$$F_{KJ} = 3.067 \text{ k} \quad (C) = 3.07 \text{ k} \quad (C) \quad \textbf{Ans}$$

$$\zeta + \Sigma M_K = 0; \quad F_{CD}(30) + 1.20(20) - 2.90(40) = 0$$
$$F_{CD} = 3.067 \text{ k} \quad (T) = 3.07 \text{ k} \quad (T) \quad \textbf{Ans}$$

From sec $b-b$, summing forces along x and y axes yields

$$\overset{+}{\rightarrow} \Sigma F_x = 0; \quad F_{ND}\left(\frac{4}{5}\right) - F_{NJ}\left(\frac{4}{5}\right) + 3.067 - 3.067 = 0$$
$$F_{ND} = F_{NJ} \qquad [1]$$

$$+\uparrow \Sigma F_y = 0; \quad 2.90 - 1.20 - 1.50 - F_{ND}\left(\frac{3}{5}\right) - F_{NJ}\left(\frac{3}{5}\right) = 0$$
$$F_{ND} + F_{NJ} = 0.3333 \qquad [2]$$

Solving Eqs. [1] and [2] yields

$$F_{ND} = 0.167 \text{ k} \quad (T) \qquad F_{NJ} = 0.167 \text{ k} \quad (C) \qquad \textbf{Ans}$$

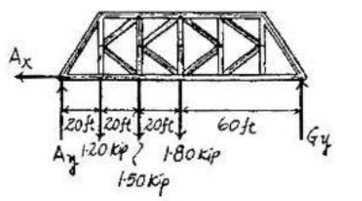

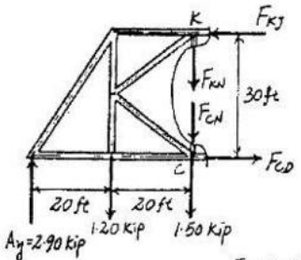

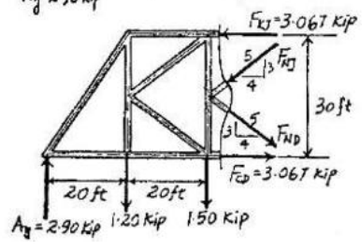

***3–44.** Determine the force in members *HI*, *CD*, and *LH* of the K-truss. State whether the members are in tension or compression. *Suggestion:* Section the truss through *HI*, *IL*, *LC*, and *CD* to determine *HI* and *CD*. Assume all members are pin-connected.

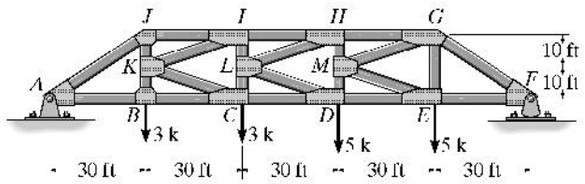

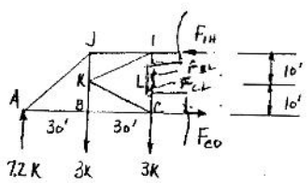

Left section :

$$\zeta + \Sigma M_C = 0; \quad F_{IH}(20) + 3(30) - 7.2(60) = 0; \quad F_{IH} = 17.1 \text{ k(C)} \quad \textbf{Ans}$$
$$\zeta + \Sigma M_I = 0; \quad F_{CD}(20) - 7.2(60) - 3(30) = 0; \quad F_{CD} = 17.1 \text{ k(T)} \quad \textbf{Ans}$$

Right section :

$$\zeta + \Sigma M_D = 0; \quad -17.1(20) - 5(30) + 8.8(60) - F_{HL}(20)\left(\frac{3}{\sqrt{10}}\right) = 0$$
$$F_{HL} = 1.90 \text{ k (C)} \quad \textbf{Ans}$$

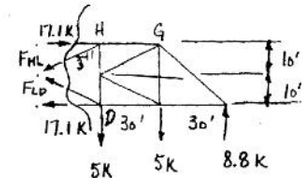

www.e-kitabi.com

c03.qxd 6/24/08 2:57 PM Page 75

© 2009 by R.C. Hibbeler. Published by Pearson Prentice Hall, Pearson Education, Inc., Upper Saddle River, NJ. All rights reserved. This material is protected under all copyright laws as they currently exist. No portion of this material may be reproduced, in any form or by any means, without permission in writing from the publisher.

3–45. Determine the forces in all the members of the complex truss. State if the members are in tension or compression. *Hint:* Substitute member AD with one placed between E and C.

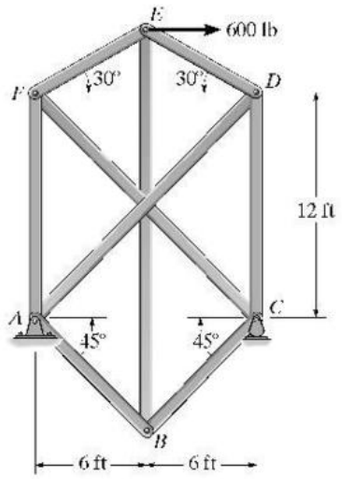

$S_i = S_i' + \chi(s_i)$

$F_{EC} = S'_{EC} + (x)S_{EC} = 0$

$747.9 + x(0.526) = 0$

$x = 1421.86$

Thus:

$F_{AF} = S_{AF} + (x)s_{AF}$

$= 1373.21 + (1421.86)(-1.41)$

$= -646.3$ lb

$F_{AF} = 646$ lb(C) **Ans**

In a similar manner:

$F_{AB} = 580$ lb(C) **Ans**

$F_{EB} = 820$ lb(T) **Ans**

$F_{BC} = 580$ lb(C) **Ans**

$F_{EF} = 473$ lb(C) **Ans**

$F_{CF} = 580$ lb(T) **Ans**

$F_{CD} = 1593$ lb(C) **Ans**

$F_{ED} = 1166$ lb(C) **Ans**

$F_{DA} = 1428$ lb(T) **Ans**

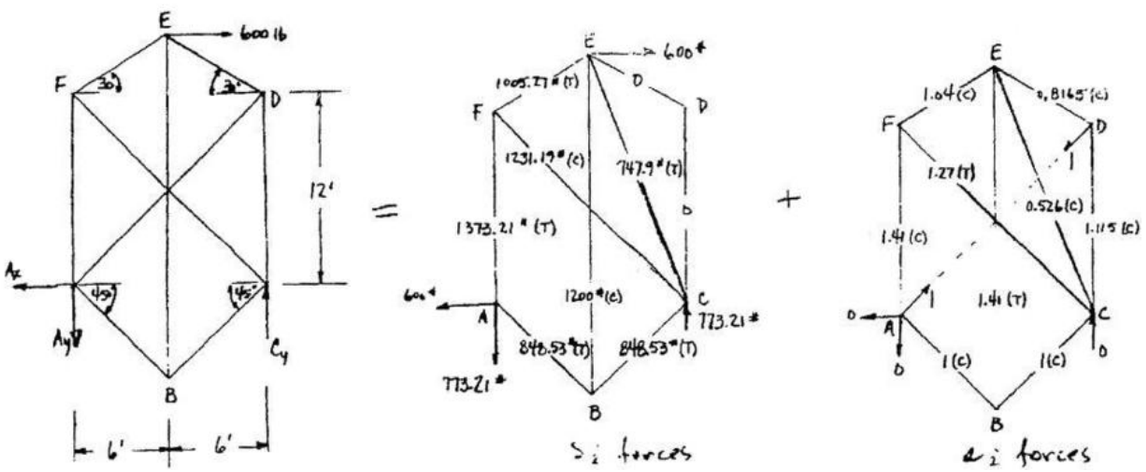

www.e-kitabi.com

c03.qxd 6/24/08 2:57 PM Page 76

© 2009 by R.C. Hibbeler. Published by Pearson Prentice Hall, Pearson Education, Inc., Upper Saddle River, NJ. All rights reserved. This material is protected under all copyright laws as they currently exist. No portion of this material may be reproduced, in any form or by any means, without permission in writing from the publisher.

3–46. Determine the forces in all the members of the lattice (complex) truss. State if the members are in tension or compression. *Hint:* Substitute member JE by one placed between K and F.

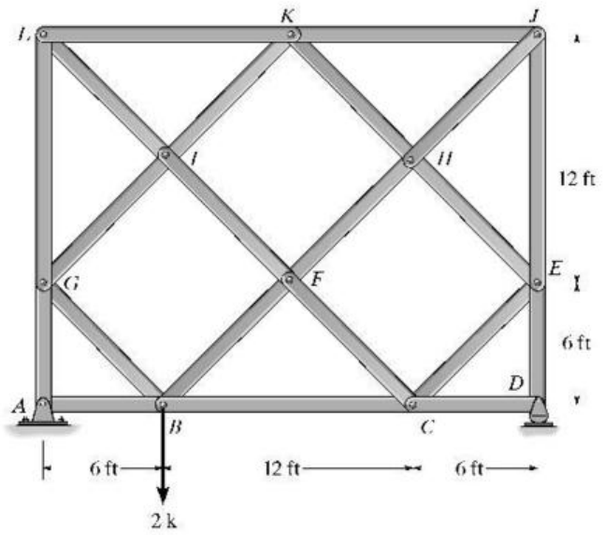

$S_i = S_i' + \chi(s_i)$

$F_{KF} = 1.5 + 1(x) = 0;\ x = -1.5$

Thus;

$F_{AB} = 0$	Ans	$F_{BC} = 1.00$ k(C)	Ans
$F_{AG} = 1.50$ k(C)	Ans	$F_{FC} = 0.707$ k(T)	Ans
$F_{GB} = 0.707$ k(T)	Ans	$F_{FH} = 2.12$ k(T)	Ans
$F_{GL} = 0.500$ k(C)	Ans	$F_{KH} = 0.707$ k(T)	Ans
$F_{GI} = 0.707$ k(C)	Ans	$F_{KJ} = 1.50$ k(C)	Ans
$F_{LI} = 0.707$ k(T)	Ans	$F_{JH} = 2.12$ k(T)	Ans
$F_{LK} = 0.500$ k(C)	Ans	$F_{CD} = 0$	Ans
$F_{IK} = 0.707$ k(C)	Ans	$F_{DE} = 0.500$ k(C)	Ans
$F_{IF} = 0.707$ k(T)	Ans	$F_{CE} = 0.707$ k(C)	Ans
$F_{BF} = 2.12$ k(T)	Ans	$F_{HE} = 0.707$ k(T)	Ans
		$F_{JE} = 1.50$ k(C)	Ans

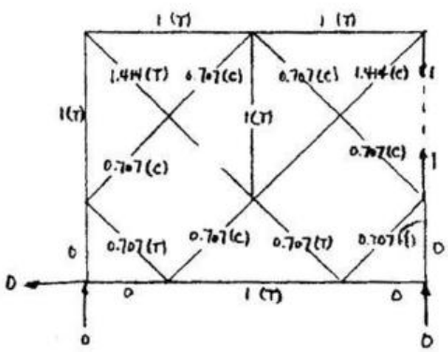

+

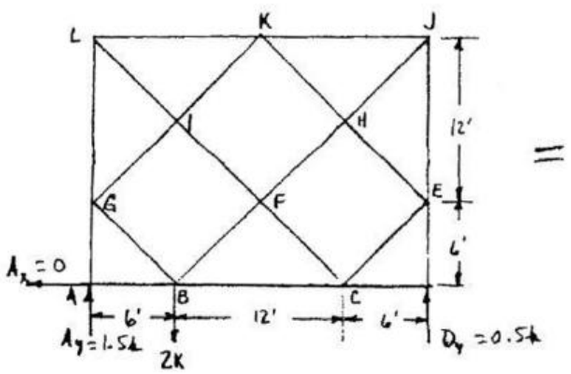

=

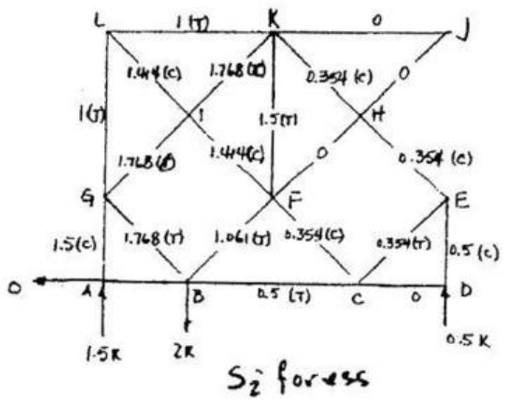

www.e-kitabi.com

© 2009 by R.C. Hibbeler. Published by Pearson Prentice Hall, Pearson Education, Inc., Upper Saddle River, NJ. All rights reserved. This material is protected under all copyright laws as they currently exist. No portion of this material may be reproduced, in any form or by any means, without permission in writing from the publisher.

3–47. Determine the force in each member and state if the members are in tension or compression.

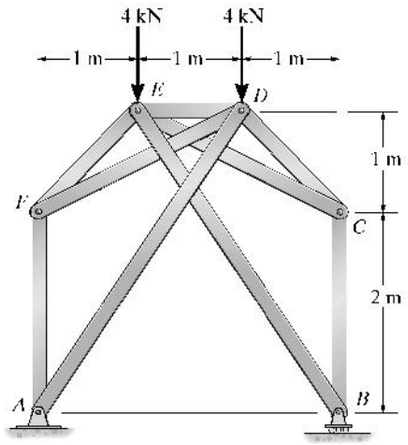

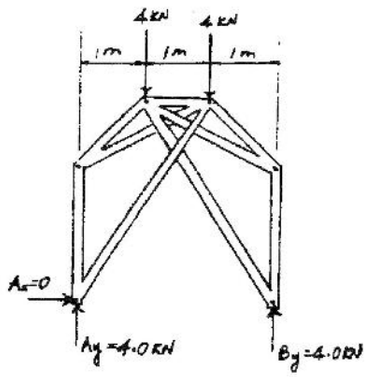

Reactions :

$A_x = 0$, $A_y = 4.00$ kN, $B_y = 4.00$ kN

Joint A :

$\overset{+}{\rightarrow} \Sigma F_x = 0;\ F_{AD} = 0$ Ans

$+\uparrow \Sigma F_y = 0;\ 4.00 - F_{AF} = 0;\quad F_{AF} = 4.00$ kN (C) **Ans**

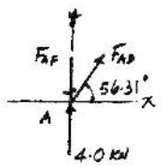

Joint F :

$+\uparrow \Sigma F_y = 0;\quad 4.00\sin 45° - F_{FD}\sin 18.43° = 0$

$F_{FD} = 8.944$ kN $= 8.94$ kN (T) **Ans**

$\overset{+}{\rightarrow} \Sigma F_x = 0;\quad 4.00\cos 45° + 8.944\cos 18.43° - F_{FE} = 0$

$F_{FE} = 11.313$ kN $= 11.3$ kN (C) **Ans**

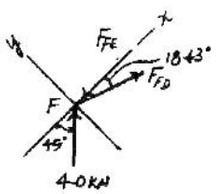

Due to symmetrical loading and geometry

$F_{BC} = 4.00$ kN (C) $F_{CE} = 8.94$ kN (T) **Ans**

$F_{BE} = 0$ $F_{CD} = 11.3$ kN (C) **Ans**

Joint E :

$\overset{+}{\leftarrow} \Sigma F_x = 0;\quad -F_{ED} + 8.944\cos 26.56° + 11.31\cos 45° = 0$

$F_{ED} = 16.0$ kN (C)

$+\uparrow \Sigma F_y = 0;\quad -4 - 8.944\sin 26.56° + 11.31\sin 45° = 0$ (Check)

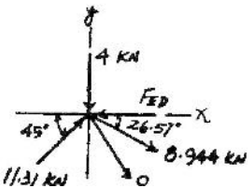

www.e-kitabi.com

c03.qxd 6/24/08 2:57 PM Page 78

© 2009 by R.C. Hibbeler. Published by Pearson Prentice Hall, Pearson Education, Inc., Upper Saddle River, NJ. All rights reserved. This material is protected under all copyright laws as they currently exist. No portion of this material may be reproduced, in any form or by any means, without permission in writing from the publisher.

***3–48.** Determine the reactions and the force in members BA, AD and CD.

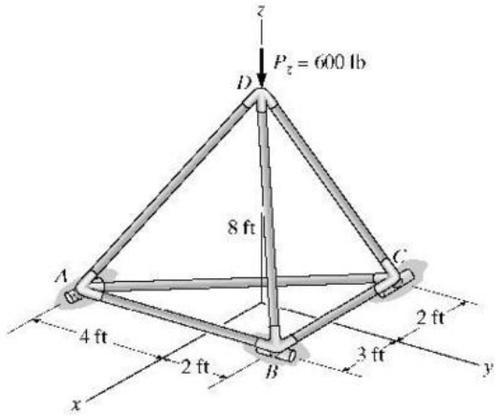

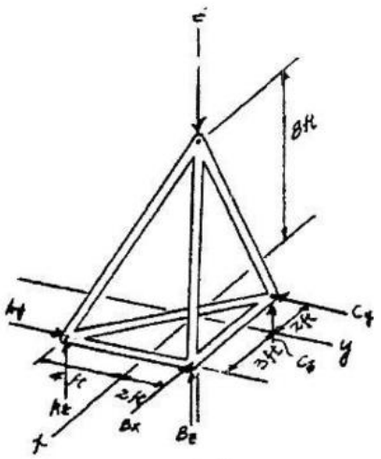

Entire truss

$\Sigma M_{AB} = 0$: $C_z(5) - 600(3) = 0$

$C_z = 360$ lb **Ans**

$\Sigma M_{CB} = 0$: $600(2) - A_x(6) = 0$

$A_x = 200$ lb **Ans**

$\Sigma F_z = 0$; $B_z + 200 + 360 - 600 = 0$

$B_z = 40.0$ lb **Ans**

$\Sigma F_x = 0$;

$B_x = 0$ **Ans**

$\Sigma F_y = 0$; $A_y - C_y = 0$

$\Sigma M_z = 0$; $A_y(3) + C_y(2) = 0$

$A_y = 0$ **Ans**

$C_y = 0$ **Ans**

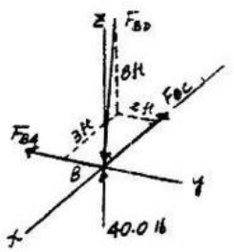

Joint B:

$\Sigma F_z = 0$; $-\frac{8}{\sqrt{77}}F_{BD} + 40 = 0$

$F_{BD} = 43.87$ lb $= 43.9$ lb (C)

$\Sigma F_x = 0$; $\sqrt{\frac{13}{77}}\left(\frac{3}{\sqrt{13}}\right)(43.87) - F_{BC} = 0$

$F_{BC} = 15.0$ lb (T)

$\Sigma F_y = 0$; $\sqrt{\frac{13}{77}}\left(\frac{2}{\sqrt{13}}\right)(43.87) - F_{BA} = 0$

$F_{BA} = 10.0$ lb (T) **Ans**

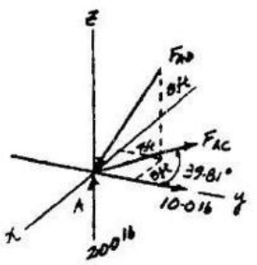

Joint A:

$\Sigma F_z = 0$; $-\frac{8}{\sqrt{89}}F_{AD} + 200 = 0$

$F_{AD} = 235.9$ lb $= 236$ lb (C) **Ans**

$\Sigma F_x = 0$; $\left(\frac{5}{\sqrt{89}}\right)\left(\frac{3}{5}\right)(235.9) - F_{AC}\sin 39.8° = 0$

$F_{AC} = 117.2$ lb $= 117$ lb (T)

$\Sigma F_y = 0$; $117.2\cos 39.81° - \left(\frac{5}{\sqrt{89}}\right)\left(\frac{4}{5}\right)(235.9) + 10.0 = 0$ **Check**

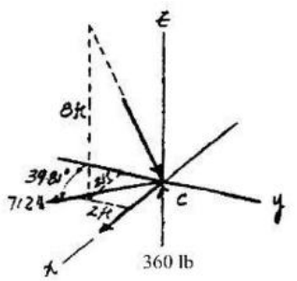

Joint C:

$\Sigma F_z = 0$; $-\frac{8}{\sqrt{72}}F_{CD} + 360 = 0$

$F_{CD} = 382$ lb (C) **Ans**

www.e-kitabi.com

c03.qxd 6/24/08 2:57 PM Page 79

© 2009 by R.C. Hibbeler. Published by Pearson Prentice Hall, Pearson Education, Inc., Upper Saddle River, NJ. All rights reserved. This material is protected under all copyright laws as they currently exist. No portion of this material may be reproduced, in any form or by any means, without permission in writing from the publisher.

3–49. Determine the force in each member of the space truss. Indicate if the members are in tension or compression.

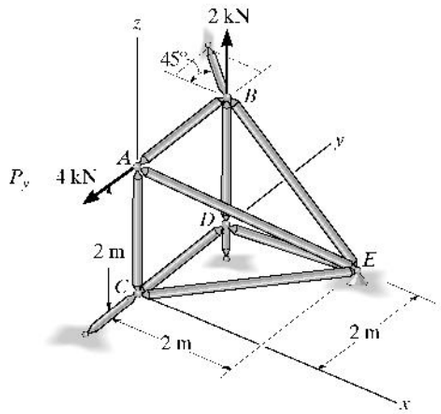

Joint A :

$\Sigma F_x = 0$: $0.577F_{AE} = 0$

$\Sigma F_y = 0$: $-4 + F_{AB} + 0.577\,F_{AE} = 0$

$\Sigma F_z = 0$: $-F_{AC} - 0.577\,F_{AE} = 0$

$F_{AC} = F_{AE} = 0$ **Ans**

$F_{AB} = 4$ kN (T) **Ans**

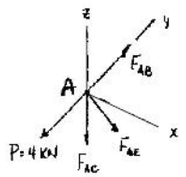

Joint B :

$\Sigma F_x = 0$: $-R_B(\cos 45°) + 0.707F_{BE} = 0$

$\Sigma F_y = 0$: $-4 + R_B(\sin 45°) = 0$

$\Sigma F_z = 0$: $2 + F_{BD} - 0.707\,F_{BE} = 0$

$R_B = F_{BE} = 5.66$ kN (T) **Ans**

$F_{BD} = 2$ kN (C) **Ans**

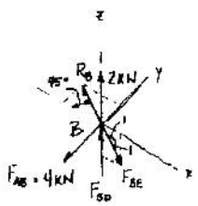

Joint D :

$\Sigma F_x = 0$: $F_{DE} = 0$ **Ans**

$\Sigma F_y = 0$: $F_{DC} = 0$ **Ans**

Joint C :

$\Sigma F_x = 0$: $F_{CE} = 0$ **Ans**

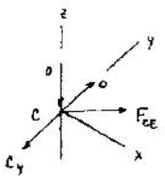

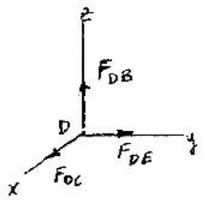

www.e-kitabi.com

c03.qxd 6/24/08 2:57 PM Page 80

© 2009 by R.C. Hibbeler. Published by Pearson Prentice Hall, Pearson Education, Inc., Upper Saddle River, NJ. All rights reserved. This material is protected under all copyright laws as they currently exist. No portion of this material may be reproduced, in any form or by any means, without permission in writing from the publisher.

3–50. Determine the force in each member of the space truss. Indicate if the members are in tension or compression.

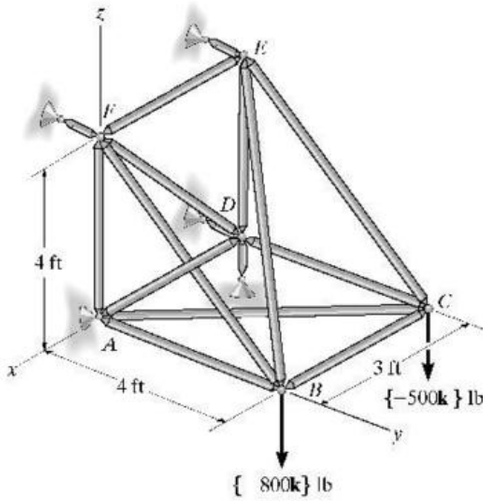

Joint C :

$\Sigma F_z = 0;$ $F_{CE}(\sin 45°) - 500 = 0;$ $F_{CE} = 707.1 \text{ lb} = 707 \text{ lb (T)}$ Ans

$\Sigma F_y = 0;$ $F_{CD} - 707.1(\cos 45°) = 0;$ $F_{CD} = 500 \text{ lb (C)}$ Ans

$\Sigma F_x = 0;$ $F_{CB} = 0$ Ans

Joint B :

$\Sigma F_x = 0;$ $F_{BE}\left(\frac{-3}{\sqrt{41}}\right) = 0;$ $F_{BE} = 0$ Ans

$\Sigma F_z = 0;$ $F_{BF}(\sin 45°) - 800 = 0;$ $F_{BF} = 1131.4 \text{ lb} = 1.13 \text{ k}$ (T) Ans

$\Sigma F_y = 0;$ $F_{BA} - 1131.4(\cos 45°) = 0;$ $F_{BA} = 800 \text{ lb (C)}$ Ans

Joint E :

$\Sigma F_z = 0;$ $F_{ED} - 707.1(\sin 45°) = 0;$ $F_{ED} = 500 \text{ lb (C)}$ Ans

$\Sigma F_x = 0;$ $F_{EF} = 0$ Ans

$\Sigma F_y = 0;$ $707.1(\cos 45°) - E_y = 0;$ $E_y = 500 \text{ lb}$

Joint F :

$\Sigma F_x = 0;$ $F_{FD}\left(\frac{3}{5}\right) = 0;$ $F_{FD} = 0$ Ans

$\Sigma F_z = 0;$ $F_{FA} - 1131.4(\cos 45°) = 0;$ $F_{FA} = 800 \text{ lb (C)}$ Ans

$\Sigma F_y = 0;$ $1131.4(\sin 45°) - F_y = 0;$ $F_y = 800 \text{ lb}$

Joint D :

$\Sigma F_x = 0;$ $F_{DA} = 0$ Ans

$\Sigma F_y = 0;$ $D_y - 500 = 0;$ $D_y = 500 \text{ lb}$

$\Sigma F_z = 0;$ $D_z - 500 = 0;$ $D_z = 500 \text{ lb}$

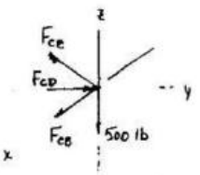

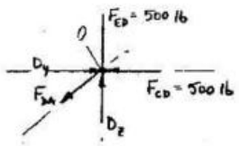

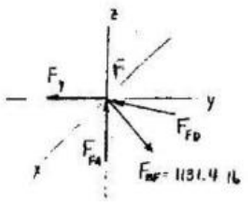

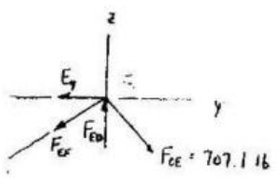

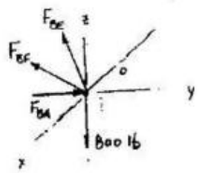

3–51. Determine the force in members AB, AD, and AC of the space truss. Indicate if the members are in tension or compression.

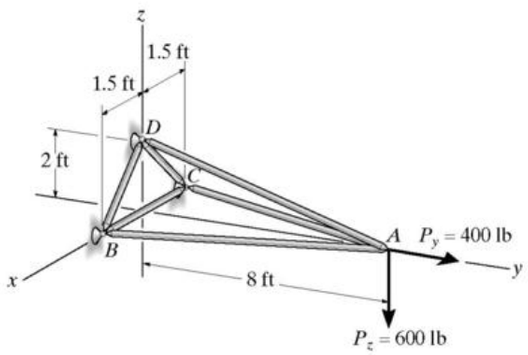

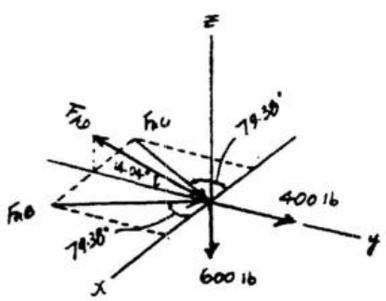

Joint A :

$\Sigma F_z = 0;$ $F_{AD} \sin 14.04° - 600 = 0$

$F_{AD} = 2473.9 \text{ lb (T)} = 2.47 \text{ k(T)}$ Ans

$\Sigma F_x = 0;$ $F_{AB} = F_{AC}$

$\Sigma F_y = 0;$ $400 + 2F_{AB} \sin 79.38° - 2473.9 \cos 14.04° = 0$

$F_{AB} = 1017 \text{ lb (C)} = 1.02 \text{ k (C)}$ Ans

$F_{AC} = 1017 \text{ lb(C)} = 1.02 \text{ k (C)}$ Ans

www.e-kitabi.com

© 2009 by R.C. Hibbeler. Published by Pearson Prentice Hall, Pearson Education, Inc., Upper Saddle River, NJ. All rights reserved. This material is protected under all copyright laws as they currently exist. No portion of this material may be reproduced, in any form or by any means, without permission in writing from the publisher.

***3–52.** Determine the reactions and the force in each member of the space truss. Indicate if the members are in tension or compression. The crate has a weight of 5 kN.

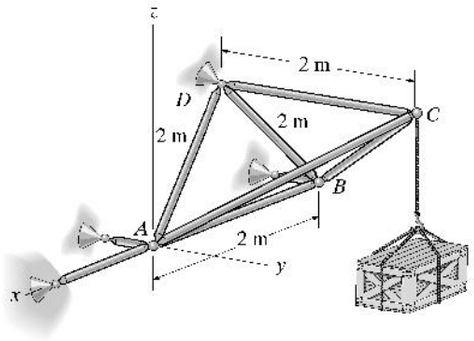

Joint C :

$\Sigma F_x = 0$: $F_{AC}\left(\frac{1}{\sqrt{8}}\right) - F_{BC}\left(\frac{1}{\sqrt{8}}\right) = 0$; $F_{AC} = F_{BC} = F$

$\Sigma F_z = 0$: $2\left[\frac{1.732F}{\sqrt{8}}\right] - 5 = 0$ $F = 4.0826$ kN (C)

$F_{AC} = F_{BC} = 4.08$ kN (C) **Ans**

$\Sigma F_y = 0$: $2\left[\frac{2(4.0826)}{\sqrt{8}}\right] - F_{CD} = 0$

$F_{CD} = 5.7736$ kN $= 5.77$ kN (T) **Ans**

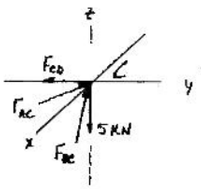

Joint B :

$\Sigma F_z = 0$: $F_{BD}(\sin 60^\circ) - \frac{1.732(4.0826)}{\sqrt{8}} = 0$;

$F_{BD} = 2.8867$ kN $= 2.89$ kN (T) **Ans**

$\Sigma F_x = 0$: $2.8867(\cos 60^\circ) - \frac{1}{\sqrt{8}}(4.0826) + F_{AB} = 0$

$F_{AB} = 0$ **Ans**

$\Sigma F_y = 0$: $B_y - \frac{2}{\sqrt{8}}(4.0826) = 0$; $B_y = 2.89$ kN **Ans**

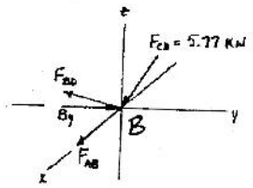

Joint A :

$\Sigma F_z = 0$: $F_{AD}(\sin 60^\circ) - \frac{1.732(4.0826)}{\sqrt{8}} = 0$

$F_{AD} = 2.8867$ kN $= 2.89$ kN (T) **Ans**

$\Sigma F_y = 0$: $A_y - \frac{2(4.0826)}{\sqrt{8}} = 0$; $A_y = 2.8868$ kN $= 2.89$ kN **Ans**

$\Sigma F_x = 0$: $-A_x - 2.8868(\cos 60^\circ) + \frac{(4.0826)}{\sqrt{8}} = 0$; $A_x = 0$ **Ans**

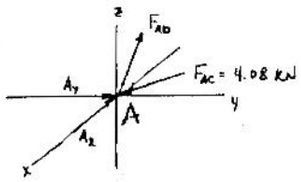

www.e-kitabi.com

c03.qxd 6/24/08 2:57 PM Page 82

© 2009 by R.C. Hibbeler. Published by Pearson Prentice Hall, Pearson Education, Inc., Upper Saddle River, NJ. All rights reserved. This material is protected under all copyright laws as they currently exist. No portion of this material may be reproduced, in any form or by any means, without permission in writing from the publisher.

3–53. Determine the force in each member of the space truss and state if the members are in tension or compression. *Hint:* the support reaction at E acts along member EB. Why?

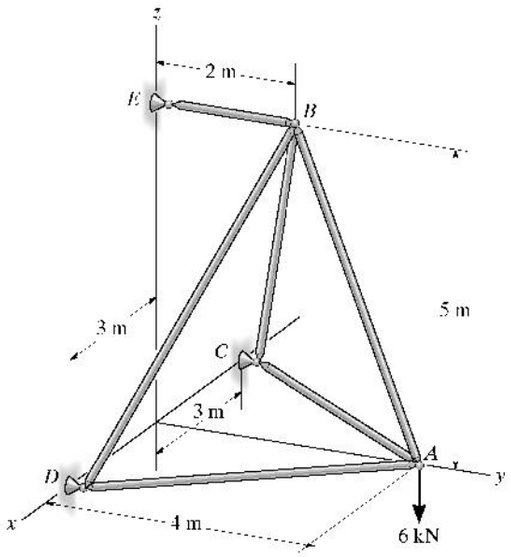

Method of Joints : In this case, the support reactions are not required for determining the member forces.

Joint A

$$\Sigma F_z = 0; \quad F_{AB}\left(\frac{5}{\sqrt{29}}\right) - 6 = 0$$

$$F_{AB} = 6.462 \text{ kN (T)} = 6.46 \text{ kN (T)} \quad \textbf{Ans}$$

$$\Sigma F_x = 0; \quad F_{AC}\left(\frac{3}{5}\right) - F_{AD}\left(\frac{3}{5}\right) = 0 \quad F_{AC} = F_{AD} \quad [1]$$

$$\Sigma F_y = 0; \quad F_{AC}\left(\frac{4}{5}\right) + F_{AD}\left(\frac{4}{5}\right) - 6.462\left(\frac{2}{\sqrt{29}}\right) = 0$$

$$F_{AC} + F_{AD} = 3.00 \quad [2]$$

Solving Eqs. [1] and [2] yields

$$F_{AC} = F_{AD} = 1.50 \text{ kN (C)} \quad \textbf{Ans}$$

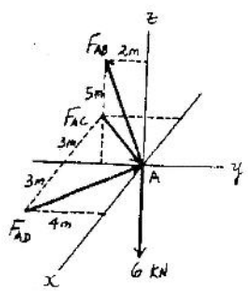

Joint B

$$\Sigma F_x = 0; \quad F_{BC}\left(\frac{3}{\sqrt{38}}\right) - F_{BD}\left(\frac{3}{\sqrt{38}}\right) = 0 \quad F_{BC} = F_{BD} \quad [1]$$

$$\Sigma F_z = 0; \quad F_{BC}\left(\frac{5}{\sqrt{38}}\right) + F_{BD}\left(\frac{5}{\sqrt{38}}\right) - 6.462\left(\frac{5}{\sqrt{29}}\right) = 0$$

$$F_{BC} + F_{BD} = 7.397 \quad [2]$$

Solving Eqs. [1] and [2] yields

$$F_{BC} = F_{BD} = 3.699 \text{ kN (C)} = 3.70 \text{ kN (C)} \quad \textbf{Ans}$$

$$\Sigma F_y = 0; \quad 2\left[3.699\left(\frac{2}{\sqrt{38}}\right)\right] + 6.462\left(\frac{2}{\sqrt{29}}\right) - F_{BE} = 0$$

$$F_{BE} = 4.80 \text{ kN (T)} \quad \textbf{Ans}$$

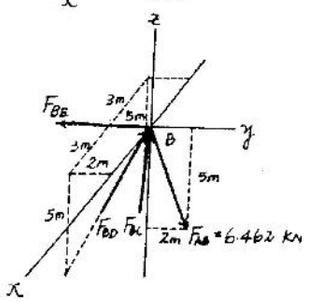

Note : The support reactions at supports C and D can be determined by analyzing joints C and D, respectively using the results obtained above.

www.e-kitabi.com

c03.qxd 6/24/08 2:57 PM Page 83

© 2009 by R.C. Hibbeler. Published by Pearson Prentice Hall, Pearson Education, Inc., Upper Saddle River, NJ. All rights reserved. This material is protected under all copyright laws as they currently exist. No portion of this material may be reproduced, in any form or by any means, without permission in writing from the publisher.

3–54. Three identical trusses are pin connected to produce the framework shown. If the framework rests on the smooth supports at A, C, and E, determine the force in members CD, DH, and CH. State if the members are in tension or compression.

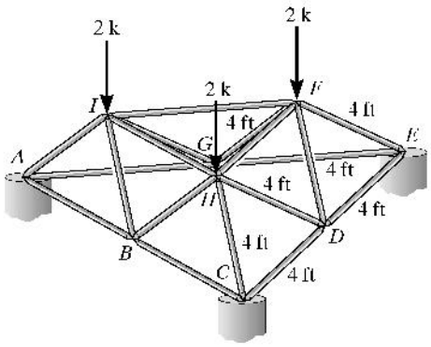

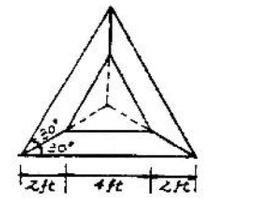

PLAN VIEW OF TRUSS SYSTEM

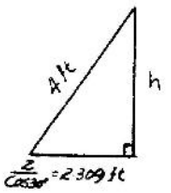

$\frac{2}{\cos 30^\circ} = 2.309$ ft

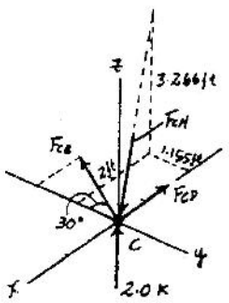

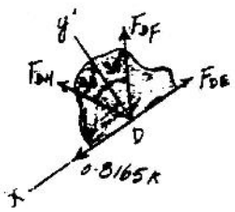

$h = \sqrt{4^2 - 2.309^3} = 3.2660$ ft

Due to symmetrical system and loading

$A_y = C_y = E_y = 2.0$ k

Joint C:

$\Sigma F_z = 0;\quad 2.0 - \frac{3.2660}{4} F_{CH} = 0$

$F_{CB} = 2.449$ k $= 2.45$ k (C) **Ans**

$\Sigma F_y = 0;\quad -F_{CB}\cos 30^\circ + \frac{1.155}{4}(2.449) = 0$

$F_{CB} = 0.8165$ k $= 0.817$ k (T)

$\Sigma F_x = 0;\quad -F_{CD} - 0.8165\sin 30^\circ + \frac{2}{4}(2.449) = 0$

$F_{CD} = 0.8165$ k $= 0.817$ k (T) **Ans**

Joint D:

Due to symmetrical geometry and loading

$F_{DE} = F_{CD} = 0.8165$ k (T) and $F_{DH} = F_{DF}$

$\Sigma F_y = 0;\quad 2F_{DH}\cos 30^\circ = 0$

$F_{DH} = 0$ **Ans**

www.e-kitabi.com

© 2009 by R.C. Hibbeler. Published by Pearson Prentice Hall, Pearson Education, Inc., Upper Saddle River, NJ. All rights reserved. This material is protected under all copyright laws as they currently exist. No portion of this material may be reproduced, in any form or by any means, without permission in writing from the publisher.

3–55. Three identical trusses are pin connected to produce the framework shown. If the framework rests on the smooth supports at A, C, and E, determine the force in members DF, FH, and EF. State if the members are in tension or compression.

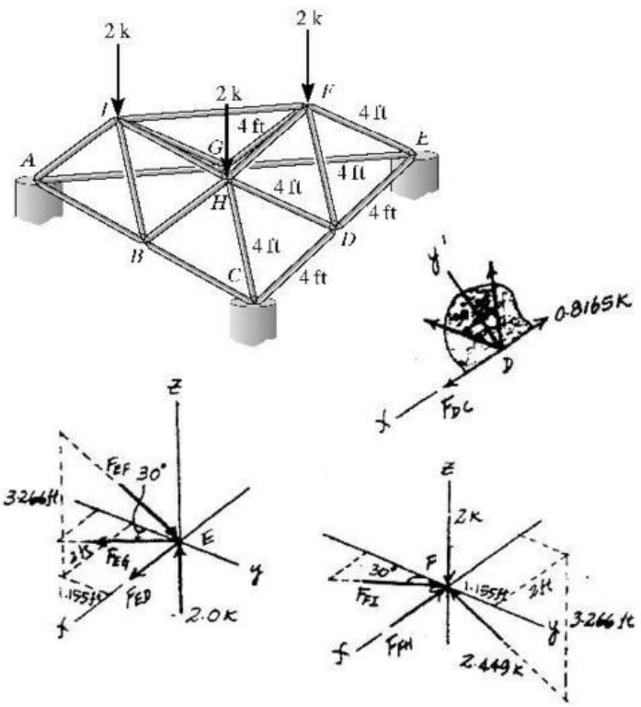

Geometry:

$h = \sqrt{4^2 - 2.309^2} = 3.2660$ ft

Due to symmetrical geometry and loading

$A_y = C_y = E_y = 2.0$ k

Joint C:

$\Sigma F_z = 0;\quad 2.0 - \frac{3.2660}{4} F_{EF} = 0$

$F_{EF} = 2.449$ k $= 2.45$ k (C) **Ans**

$\Sigma F_y = 0;\quad \frac{1.155}{4}(2.449) - F_{EG}\cos 30° = 0$

$F_{EG} = 0.8165$ k

$\Sigma F_x = 0;\quad F_{ED} + 0.8165\sin 30° - \frac{2}{4}(2.449) = 0$

$F_{ED} = 0.8165$ k

Joint D:

Due to symmetrical geometry and loading

$F_{DC} = F_{ED} = 0.8165$ k (T) and $F_{DF} = F_{DH}$

$\Sigma F_y = 0;\quad 2F_{DF}\cos 30° = 0$

$F_{DF} = 0$ **Ans**

Joint F:

$\Sigma F_y = 0;\quad F_{FI}\cos 30° - \frac{1.155}{4}(2.449) = 0$

$F_{FI} = 0.8165$ k (C)

$\Sigma F_x = 0;\quad \frac{2}{4}(2.449) - 0.8165\sin 30° - F_{FH} = 0$

$F_{FH} = 0.817$ k (C) **Ans**

***3–56.** Determine the force in members BE, DF, and BC of the space truss and state if the members are in tension or compression.

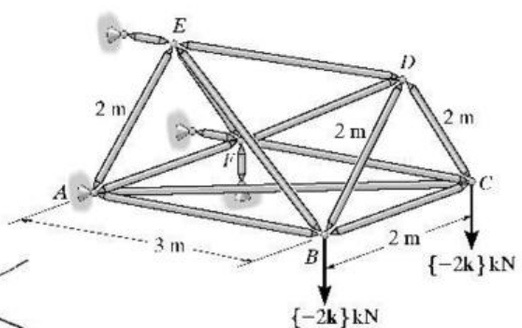

Method of Joints: In this case, the support reactions are not required for determining the member forces.

Joint C:

$\Sigma F_z = 0;\quad F_{CD}\sin 60° - 2 = 0\quad F_{CD} = 2.309$ kN (T)

$\Sigma F_x = 0;\quad 2.309\cos 60° - F_{BC} = 0$

$F_{BC} = 1.154$ kN (C) $= 1.15$ kN (C) **Ans**

Joint D: Since F_{CD}, F_{DE} and F_{DF} lie within the same plane and F_{DB} is out of this plane, then $F_{DB} = 0$.

$\Sigma F_x = 0;\quad F_{DF}\left(\frac{1}{\sqrt{13}}\right) - 2.309\cos 60° = 0$

$F_{DF} = 4.16$ kN (C) **Ans**

Joint B:

$\Sigma F_z = 0;\quad F_{BE}\left(\frac{1.732}{\sqrt{13}}\right) - 2 = 0$

$F_{BE} = 4.16$ kN (T) **Ans**

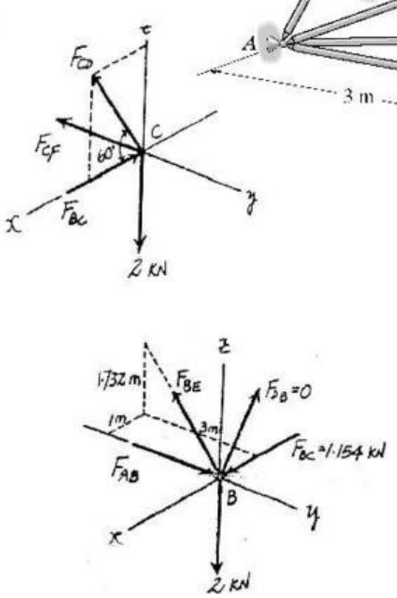

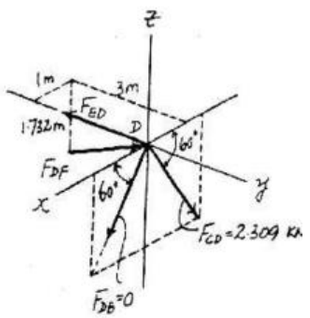

www.e-kitabi.com

c03.qxd 6/24/08 2:57 PM Page 85

© 2009 by R.C. Hibbeler. Published by Pearson Prentice Hall, Pearson Education, Inc., Upper Saddle River, NJ. All rights reserved. This material is protected under all copyright laws as they currently exist. No portion of this material may be reproduced, in any form or by any means, without permission in writing from the publisher.

3–57. Determine the force in members AB, CD, ED, and CF of the space truss and state if the members are in tension or compression.

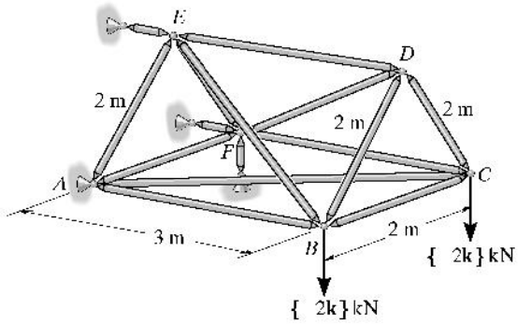

Method of Joints : In this case, the support reactions are not required for determining the member forces.

Joint C: Since F_{CD}, F_{BC} and 2 kN force lie within the same plane and F_{CF} is out of this plane, then

$$F_{CF} = 0 \qquad \textbf{Ans}$$

$$\Sigma F_z = 0; \quad F_{CD}\sin 60° - 2 = 0$$
$$F_{CD} = 2.309 \text{ kN (T)} = 2.31 \text{ kN (T)} \qquad \textbf{Ans}$$

$$\Sigma F_x = 0; \quad 2.309\cos 60° - F_{BC} = 0 \qquad F_{BC} = 1.154 \text{ kN (C)}$$

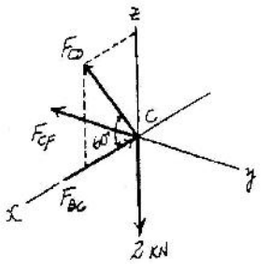

Joint D: Since F_{CD}, F_{DE} and F_{DB} lie within the same plane and F_{DB} is out of this plane, then $F_{DB} = 0$.

$$\Sigma F_x = 0; \quad F_{DF}\left(\frac{1}{\sqrt{13}}\right) - 2.309\cos 60° = 0$$
$$F_{DF} = 4.163 \text{ kN (C)}$$

$$\Sigma F_y = 0; \quad 4.163\left(\frac{3}{\sqrt{13}}\right) - F_{ED} = 0$$
$$F_{ED} = 3.46 \text{ kN (T)} \qquad \textbf{Ans}$$

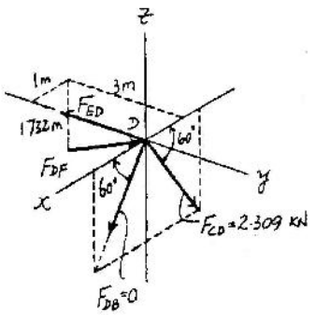

Joint B:

$$\Sigma F_z = 0; \quad F_{BE}\left(\frac{1.732}{\sqrt{13}}\right) - 2 = 0 \qquad F_{BE} = 4.163 \text{ kN (T)}$$

$$\Sigma F_y = 0; \quad F_{AB} - 4.163\left(\frac{3}{\sqrt{13}}\right) = 0$$
$$F_{AB} = 3.46 \text{ kN (C)} \qquad \textbf{Ans}$$

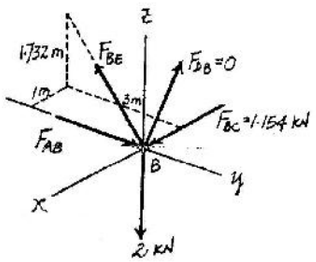

www.e-kitabi.com

c03.qxd 6/24/08 2:58 PM Page 86

© 2009 by R.C. Hibbeler. Published by Pearson Prentice Hall, Pearson Education, Inc., Upper Saddle River, NJ. All rights reserved. This material is protected under all copyright laws as they currently exist. No portion of this material may be reproduced, in any form or by any means, without permission in writing from the publisher.

3–58. Four identical trusses are connected by ball-and-socket joints to produce the framework shown. If the framework rests on the smooth supports at A, B, C and G, determine the force in each member of truss $ABCD$. State if the members are in tension or compression.

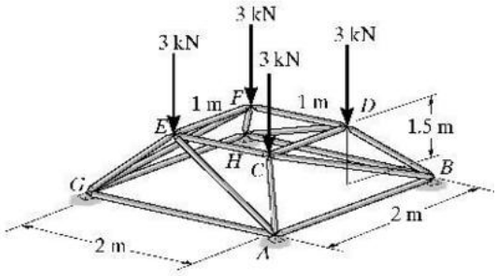

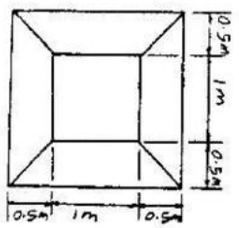

PLAN VIEW FOR TRUSS SYSTEM

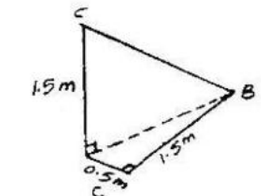

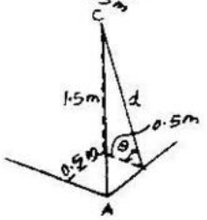

Geometry:

$l_{BC} = \sqrt{(1.5)^2 + (0.5)^2 + (1.5)^2} = 2.1794$ m

$l_{AC} = \sqrt{(0.5)^2 + (0.5)^2 + (1.5)^2} = 1.6583$ m

$d = \sqrt{(1.6583)^2 - (0.5)^2} = 1.58114$ m

$\theta = \sin^{-1}\dfrac{1.5}{1.58114} = 71.565°$

Due to symmetrical geometry and loading

$A_y = B_y = G_y = H_y = 3.0$ kN

Joint A:

y' is perpendicular to the plane that contains F_{AG}, F_{AE}, F_{AC}.

$\Sigma F_{y'} = 0;\quad 3.0\cos 71.565° - F_{AB}\cos 18.435° = 0$

$F_{AB} = 1.00$ kN (T) **Ans**

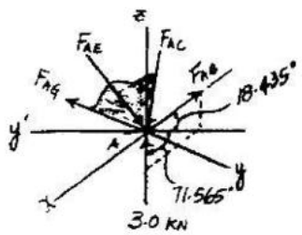

Joint B:

$\Sigma F_z = 0;\quad -F_{BD}\left(\dfrac{1.5}{1.6583}\right) + 3.0 + F_{BC}\left(\dfrac{1.5}{2.1794}\right) = 0$

$F_{BD} = 3.3166 + 0.7609F_{BC}$ (1)

$\Sigma F_x = 0;\quad 1.00 - F_{BC}\left(\dfrac{1.5}{2.1794}\right) - F_{BD}\left(\dfrac{0.5}{1.6583}\right) = 0$

$F_{BD} = 3.3166 + 2.2827F_{BC}$ (2)

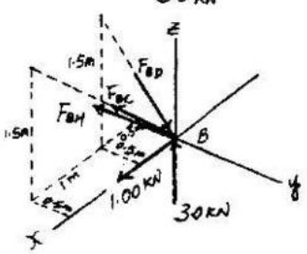

Solving Eqs. (1) and (2):

$F_{BC} = 0$ **Ans**

$F_{BD} = 3.3166$ kN = 3.32 kN (C) **Ans**

Due to symmetrical geometry and loading

$F_{CA} = 3.32$ kN (C) **Ans**

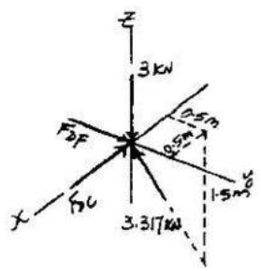

Joint C:

$\Sigma F_y = 0;\quad -F_{CD} + 3.3166\left(\dfrac{0.5}{1.6583}\right) = 0$

$F_{CD} = 1.00$ kN (C) **Ans**

www.e-kitabi.com

© 2009 by R.C. Hibbeler. Published by Pearson Prentice Hall, Pearson Education, Inc., Upper Saddle River, NJ. All rights reserved. This material is protected under all copyright laws as they currently exist. No portion of this material may be reproduced, in any form or by any means, without permission in writing from the publisher.

***3–59.** Determine the force in each member of the space truss. State if the members are in tension or compression. The supports at A and B are rollers and C is a ball-and-socket. Is this truss stable?

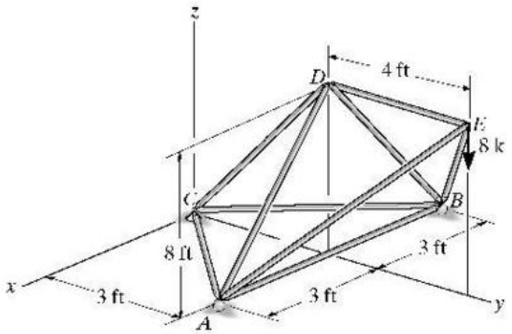

Joint E :

$\Sigma F_x = 0;$ $\left(\frac{5}{\sqrt{89}}\right)\left(\frac{3}{5}\right)F_{EB} - \left(\frac{5}{\sqrt{89}}\right)\left(\frac{3}{5}\right)F_{EA} = 0$

$F_{EB} = F_{EA}$

$\Sigma F_z = 0;$ $2\left(\frac{8}{\sqrt{89}}\right)F_{EB} - 8 = 0$

$F_{EB} = F_{EA} = 4.717\ \text{kN} = 4.72\ \text{k (C)}$ **Ans**

$\Sigma F_y = 0;$ $-F_{ED} + 2\left(\frac{5}{\sqrt{89}}\right)\left(\frac{4}{5}\right)(4.717) = 0$

$F_{ED} = 4.00\ \text{k (T)}$ **Ans**

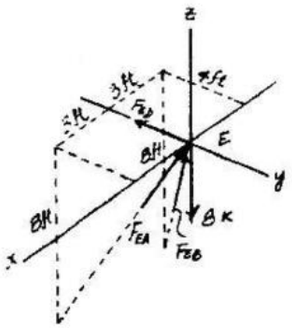

Joint D :

$\Sigma F_y = 0;$ $4.00 - F_{DC}\sin 20.56° = 0$

$F_{DC} = 11.39\ \text{k} = 11.4\ \text{k (T)}$ **Ans**

$\Sigma F_x = 0;$ $F_{DB}\sin 20.56° - F_{DA}\sin 20.56° = 0$

$F_{DB} = F_{DA}$

$\Sigma F_z = 0;$ $2F_{DA}\cos 20.56° - 11.39\cos 20.56° = 0$

$F_{DA} = F_{DB} = 5.696\ \text{k} = 5.70\ \text{k (C)}$ **Ans**

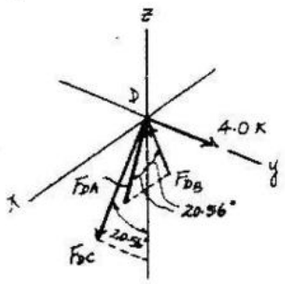

Joint A :

$\Sigma F_y = 0;$ $F_{AC}\cos 45° - \left(\frac{5}{\sqrt{89}}\right)\left(\frac{4}{5}\right)(4.717) = 0$

$F_{CA} = 2.828\ \text{k} = 2.83\ \text{k (C)}$ **Ans**

$\Sigma F_x = 0;$ $5.696\sin 20.56° + \left(\frac{5}{\sqrt{89}}\right)\left(\frac{3}{5}\right)(4.717) + 2.828\sin 45° - F_{AB} = 0$

$F_{AB} = 5.50\ \text{k (T)}$ **Ans**

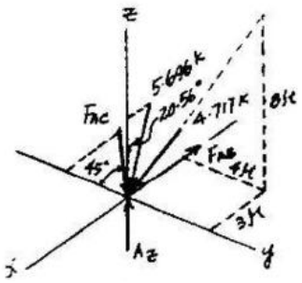

The truss is *externally unstable* since it can rotate about the z axis. **Ans**

www.e-kitabi.com

c03.qxd 6/24/08 2:58 PM Page 88

© 2009 by R.C. Hibbeler. Published by Pearson Prentice Hall, Pearson Education, Inc., Upper Saddle River, NJ. All rights reserved. This material is protected under all copyright laws as they currently exist. No portion of this material may be reproduced, in any form or by any means, without permission in writing from the publisher.

3–1P. The Pratt roof trusses are uniformly spaced every 15 ft. The deck, roofing material, and the purlins have an average weight of 5.6 lb/ft^2. The building is located in New York where the anticipated snow load is 20 lb/ft^2 and the anticipated ice load is 8 lb/ft^2. These loadings occur over the horizontal projected area of the roof. Determine the force in each member due to dead load, snow, and ice loads. Neglect the weight of the truss members and assume A is pinned and E is a roller.

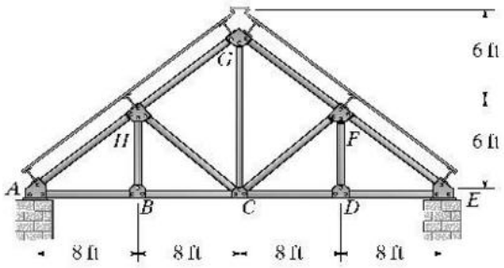

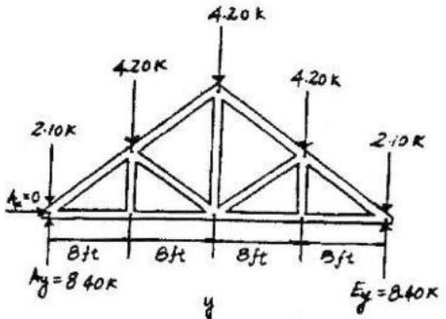

Loading :
At joints H, G and F :
$F = (20 + 8)(15)(8) + 5.6(15)(10) = 4.20$ k
At joints A and E :
$F = (20 + 8)(15)(4) + 5.6(15)(5) = 2.10$ k
Due to symmetrical loading and geometry
$A_x = 0, \quad A_y = 8.40$ k, $\quad E_y = 8.40$ k

Joint A :

$+\uparrow \Sigma F_y = 0$: $\quad 8.40 - 2.10 - F_{AH}\left(\frac{3}{5}\right) = 0$

$F_{AH} = 10.5$ k (C) Ans

$\pm \Sigma F_x = 0$: $\quad F_{AB} - 10.5\left(\frac{4}{5}\right) = 0$

$F_{AB} = 8.40$ k (T) Ans

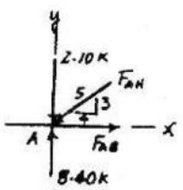

Joint B :

$\pm \Sigma F_x = 0$: $\quad F_{BC} - 8.40 = 0$

$F_{BC} = 8.40$ k (T) Ans

$+\uparrow \Sigma F_y = 0$: $F_{HB} = 0$ Ans

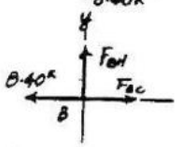

Joint H :

$\nwarrow \Sigma F_y = 0$: $\quad -4.20 \cos 36.87° + F_{HC} \cos 16.26° = 0$

$F_{HC} = 3.50$ k (C) Ans

$\swarrow \Sigma F_x = 0$: $\quad 10.5 - F_{HG} - 4.20 \sin 36.87° - 3.50 \sin 16.26° = 0$

$F_{HG} = 7.00$ k (C) Ans

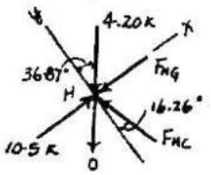

Joint G :

$\rightarrow \Sigma F_x = 0$: $\quad \frac{4}{5}(7.00) - \frac{4}{5}F_{GF} = 0$

$F_{GF} = 7.00$ k (C) Ans

$+\uparrow \Sigma F_y = 0$: $\quad \frac{3}{5}(7.00) + \frac{3}{5}(7.00) - 4.20 - F_{GC} = 0$

$F_{GC} = 4.20$ k (T) Ans

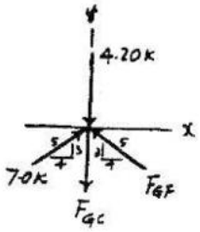

Due to symmetrical loading and geometry

$F_{DE} = F_{AB} = 8.40$ k (T) Ans
$F_{DC} = F_{BC} = 8.40$ k (T) Ans
$F_{EF} = F_{AH} = 10.5$ k (C) Ans
$F_{BH} = F_{DF} = 0$ Ans
$F_{HC} = F_{FC} = 3.50$ k (C) Ans

www.e-kitabi.com

c04.qxd 6/26/08 4:12 PM Page 89

© 2009 by R.C. Hibbeler. Published by Pearson Prentice Hall, Pearson Education, Inc., Upper Saddle River, NJ. All rights reserved. This material is protected under all copyright laws as they currently exist. No portion of this material may be reproduced, in any form or by any means, without permission in writing from the publisher.

4–1. Determine the internal shear, axial load, and bending moment in the beam at points C and D. Assume the support at B is a roller. Point C is located just to the right of the 8-k load.

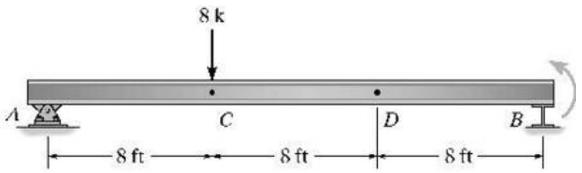

Reactions:

$\rightarrow \Sigma F_x = 0;$ $A_x = 0$

$\zeta + \Sigma M_B = 0;$ $40000 + 8000(16) - 24A_y = 0$

$A_y = 7000$ lb

$+\uparrow \Sigma F_y = 0;$ $7000 - 8000 + B_y = 0$

$B_y = 1000$ lb

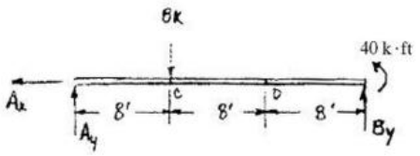

For C:

$+\uparrow \Sigma F_y = 0;$ $7000 - 8000 - V_C = 0$

$V_C = -1000$ lb $= -1$ k **Ans**

$\rightarrow \Sigma F_x = 0;$ $N_C = 0$ **Ans**

$\zeta + \Sigma M_C = 0;$ $M_C - 7000(8) = 0$

$M_C = 56000$ lb·ft $= 56$ k·ft **Ans**

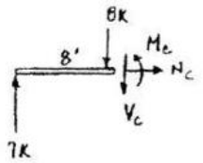

For D:

$+\uparrow \Sigma F_y = 0;$ $7000 - 8000 - V_D = 0$

$V_D = -1000$ lb $= -1$ k **Ans**

$\rightarrow \Sigma F_x = 0;$ $N_D = 0$ **Ans**

$\zeta + \Sigma M_D = 0;$ $M_D + 8000(8) - 7000(16) = 0$

$M_D = 48000$ lb·ft $= 48$ k·ft **Ans**

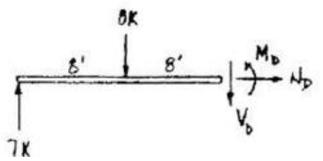

4–2. Draw the shear and moment diagrams for the beam in Prob. 4–1.

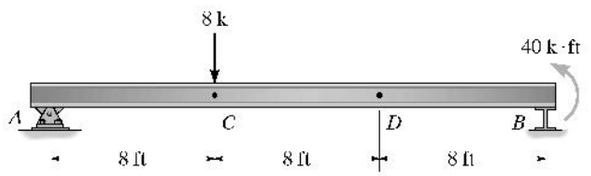

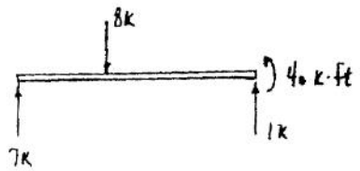

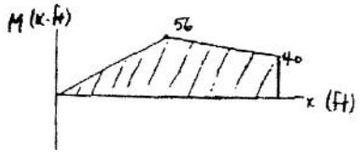

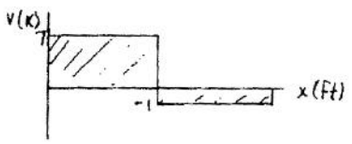

4–3. Determine the internal shear, axial load, and bending moment in the beam at point B.

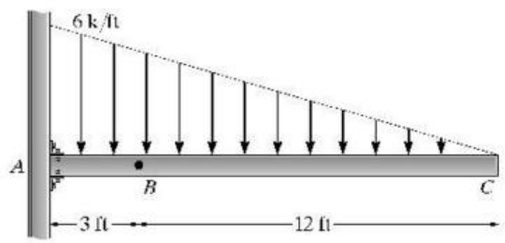

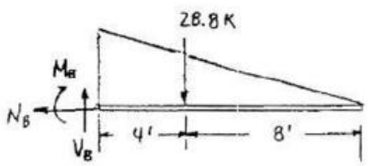

$\rightarrow \Sigma F_x = 0;$ $N_B = 0$ **Ans**

$+\uparrow \Sigma F_y = 0;$ $V_B - 28.8 = 0;$ $V_B = 28.8$ k **Ans**

$\zeta + \Sigma M_B = 0;$ $M_B + 4(28.8) = 0$

$M_B = -115$ k·ft **Ans**

www.e-kitabi.com

c04.qxd 6/26/08 4:12 PM Page 90

© 2009 by R.C. Hibbeler. Published by Pearson Prentice Hall, Pearson Education, Inc., Upper Saddle River, NJ. All rights reserved. This material is protected under all copyright laws as they currently exist. No portion of this material may be reproduced, in any form or by any means, without permission in writing from the publisher.

***4–4.** Draw the shear and moment diagrams for the beam in Prob. 4–3.

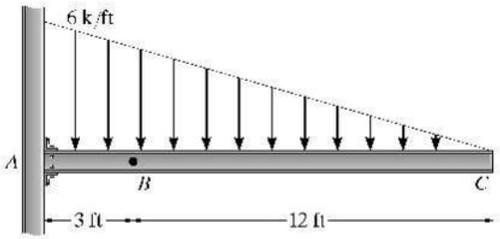

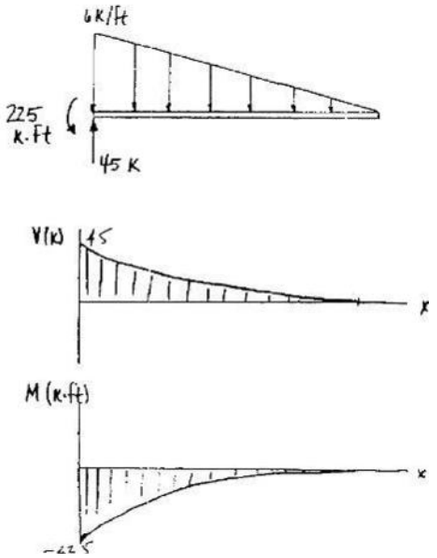

4–5. Determine the internal shear, axial force, and bending moment in the beam at points *C* and *D*. Assume the support at *B* is a roller. Point *D* is located just to the right of the 10-k load.

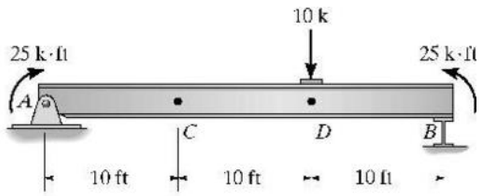

Entire Beam :

$\zeta + \Sigma M_A = 0;$ $\quad B_y(30) + 25 - 25 - 10(20) = 0$
$B_y = 6.667$ k

$+\uparrow \Sigma F_y = 0;$ $\quad A_y + 6.667 - 10 = 0$
$A_y = 3.333$ k

$\overset{+}{\rightarrow} \Sigma F_x = 0;$ $\quad A_x = 0$

Segment *AC* :

$\overset{+}{\rightarrow} \Sigma F_x = 0;$ $\quad N_C = 0$ **Ans**

$+\uparrow \Sigma F_y = 0;$ $\quad -V_C + 3.333 = 0$
$V_C = 3.33$ k **Ans**

$\zeta + \Sigma M_C = 0;$ $\quad M_C - 25 - 3.333(10) = 0$
$M_C = 58.3$ k· ft **Ans**

Segment *DB* :

$\overset{+}{\rightarrow} \Sigma F_x = 0;$ $\quad N_D = 0$ **Ans**

$+\uparrow \Sigma F_y = 0;$ $\quad V_D + 6.6667 = 0$
$V_D = -6.67$ k **Ans**

$\zeta + \Sigma M_D = 0;$ $\quad -M_D + 25 + 6.667(10) = 0$
$M_D = 91.7$ k· ft **Ans**

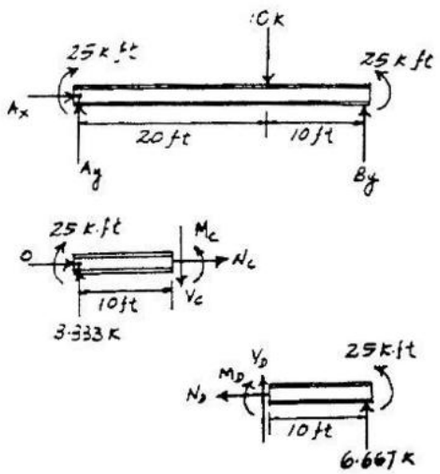

www.e-kitabi.com

c04.qxd 6/26/08 4:12 PM Page 91

© 2009 by R.C. Hibbeler. Published by Pearson Prentice Hall, Pearson Education, Inc., Upper Saddle River, NJ. All rights reserved. This material is protected under all copyright laws as they currently exist. No portion of this material may be reproduced, in any form or by any means, without permission in writing from the publisher.

4–6. Determine the internal shear, axial force, and bending moment in the beam at points C and D. Assume the support at A is a roller and B is a pin.

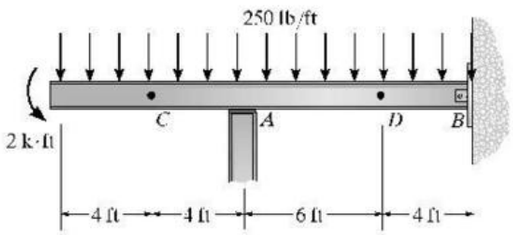

Entire Beam :

$\zeta + \Sigma M_B = 0;$ $\quad 4.50(9) + 2 - A_y(10) = 0$
$A_y = 4.25\ \text{k}$

$+\uparrow \Sigma F_y = 0;$ $\quad B_y + 4.25 - 4.50 = 0$
$B_y = 0.25\ \text{k}$

$\overset{+}{\rightarrow} \Sigma F_x = 0;$ $\quad B_x = 0$

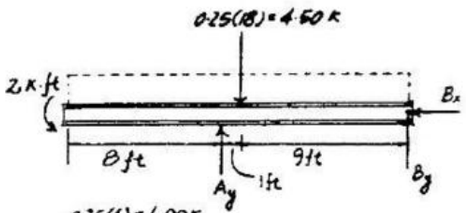

Segment to the left of C :

$\overset{+}{\rightarrow} \Sigma F_x = 0;$ $\quad N_C = 0$ **Ans**

$+\uparrow \Sigma F_y = 0;$ $\quad -V_C - 1.00 = 0$
$V_C = -1.00\ \text{k}$ **Ans**

$\zeta + \Sigma M_C = 0;$ $\quad M_C + 1.00(2) + 2 = 0$
$M_C = -4.00\ \text{k}\cdot\text{ft}$ **Ans**

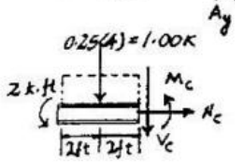

Segment DB :

$\overset{+}{\rightarrow} \Sigma F_x = 0;$ $\quad N_D = 0$ **Ans**

$+\uparrow \Sigma F_y = 0;$ $\quad V_D + 0.25 - 1.00 = 0$
$V_D = 0.750\ \text{k}$ **Ans**

$\zeta + \Sigma M_D = 0;$ $\quad -M_D + 0.25(4) - 1.00(2) = 0$
$M_D = -1.00\ \text{k}\cdot\text{ft}$ **Ans**

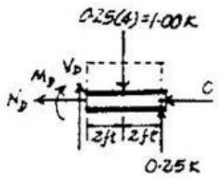

www.e-kitabi.com

© 2009 by R.C. Hibbeler. Published by Pearson Prentice Hall, Pearson Education, Inc., Upper Saddle River, NJ. All rights reserved. This material is protected under all copyright laws as they currently exist. No portion of this material may be reproduced, in any form or by any means, without permission in writing from the publisher.

4–7. Determine the internal shear, axial load, and bending moment at point C, which is just to the right of the roller at A, and point D, which is just to the left of the 3000-lb concentrated force.

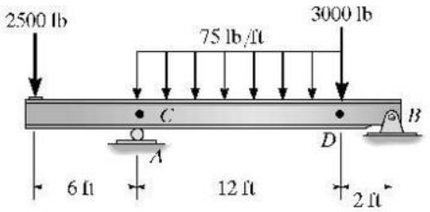

Entire Beam :

$\overset{+}{\rightarrow}\Sigma F_x = 0;$ $\quad B_x = 0$

$(+\Sigma M_B = 0;$ $\quad 2500(20) - A_y(14) + 900(8) + 3000(2) = 0$

$A_y = 4514.29$ lb

$+\uparrow \Sigma F_y = 0;$ $\quad -2500 - 900 - 3000 + 4514.29 + B_y = 0$

$B_y = 1885.71$ lb

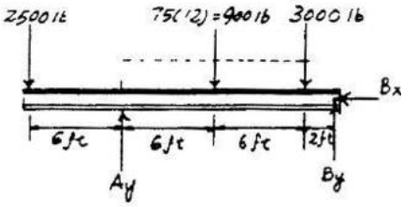

Segment to the left of C :

$\overset{+}{\rightarrow}\Sigma F_x = 0;$ $\quad N_C = 0$ **Ans**

$+\uparrow \Sigma F_y = 0;$ $\quad -2500 - V_C + 4514.29 = 0$

$V_C = 2014.3$ lb $= 2.01$ k **Ans**

$(+\Sigma M_C = 0;$ $\quad M_C + 2500(6) = 0$

$M_C = -15\,000$ lb · ft $= -15.0$ k · ft **Ans**

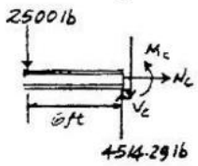

Segment DB :

$\overset{+}{\rightarrow}\Sigma F_x = 0;$ $\quad N_D = 0$ **Ans**

$+\uparrow \Sigma F_y = 0;$ $\quad V_D + 1885.71 - 3000 = 0$

$V_D = 1114.3$ lb $= 1.11$ k **Ans**

$(+\Sigma M_D = 0;$ $\quad 1885.71(2) - M_D = 0$

$M_D = 3771.4 = 3.77$ k · ft **Ans**

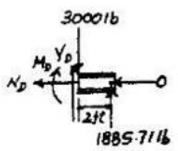

***4–8.** Determine the internal shear, axial force, and bending moment in the beam at point B.

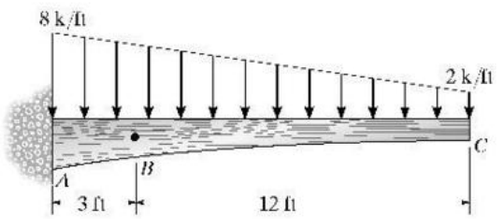

Segment BC :

$\overset{+}{\rightarrow}\Sigma F_x = 0;$ $\quad N_B = 0$ **Ans**

$+\uparrow \Sigma F_y = 0;$ $\quad V_B - 28.8 - 24.0 = 0$

$V_B = 52.8$ k **Ans**

$(+\Sigma M_B = 0;$ $\quad -M_B - 28.8(4) - 24.0(6) = 0$

$M_B = -259$ k · ft **Ans**

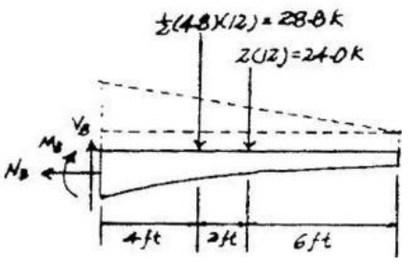

www.e-kitabi.com

© 2009 by R.C. Hibbeler. Published by Pearson Prentice Hall, Pearson Education, Inc., Upper Saddle River, NJ. All rights reserved. This material is protected under all copyright laws as they currently exist. No portion of this material may be reproduced, in any form or by any means, without permission in writing from the publisher.

4–9. Determine the internal shear, axial force, and bending moment at point C. Assume the support at A is a pin and B is a roller.

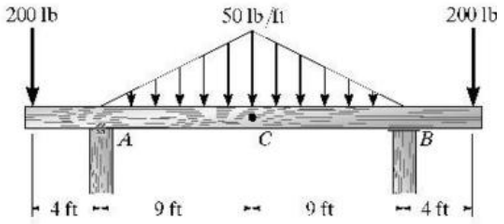

Entire Beam :

$\zeta + \Sigma M_A = 0;$ $\quad B_y(18) + 200(4) - 450(9) - 200(22) = 0$

$B_y = 425$ lb

$+\uparrow \Sigma F_y = 0;$ $\quad A_y + 425 - 200 - 450 - 200 = 0$

$A_y = 425$ lb

$\overset{+}{\rightarrow} \Sigma F_x = 0;$ $\quad A_x = 0$

Segment AC :

$\overset{+}{\rightarrow} \Sigma F_x = 0;$ $\quad N_C = 0$ **Ans**

$+\uparrow \Sigma F_y = 0;$ $\quad -V_C - 225 - 200 + 425 = 0$

$V_C = 0$ **Ans**

$\zeta + \Sigma M_C = 0;$ $\quad M_C + 225(3) + 200(13) - 425(9) = 0$

$M_C = 550$ lb · ft **Ans**

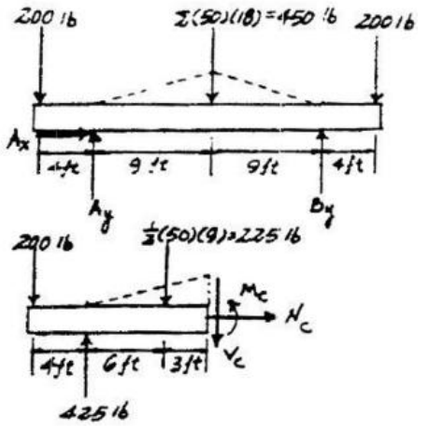

4–10. Determine the shear and moment in the floor girder as a function of x, where 12 ft $< x <$ 24 ft. Assume the support at A is a pin and B is a roller.

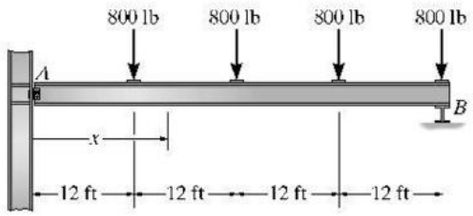

Entire Beam :

$\zeta + \Sigma M_B = 0;$ $\quad -A_y(48) + 800(36 + 24 + 12) = 0$

$A_y = 1200$ lb

Segment :

$+\uparrow \Sigma F_y = 0;$ $\quad 1200 - 800 - V = 0$

$V = 400$ lb **Ans**

$\zeta + \Sigma M_S = 0;$ $\quad -1200x + 800(x - 12) + M = 0$

$M = (400x + 9600)$ lb · ft **Ans**

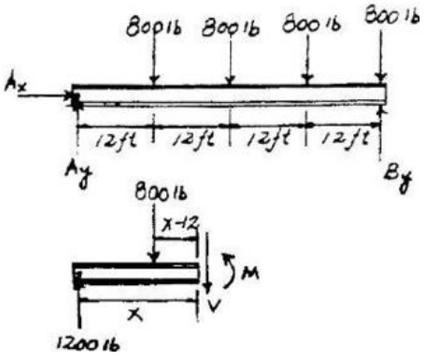

www.e-kitabi.com

c04.qxd 6/26/08 4:12 PM Page 94

© 2009 by R.C. Hibbeler. Published by Pearson Prentice Hall, Pearson Education, Inc., Upper Saddle River, NJ. All rights reserved. This material is protected under all copyright laws as they currently exist. No portion of this material may be reproduced, in any form or by any means, without permission in writing from the publisher.

4–11. Draw the shear and moment diagram of the floor girder in Prob. 4–10. Assume there is a pin at A and a roller at B.

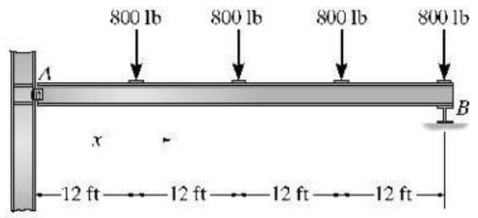

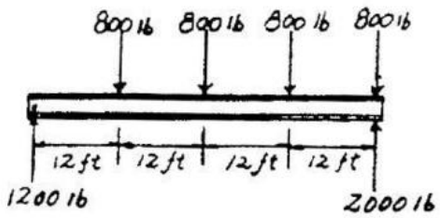

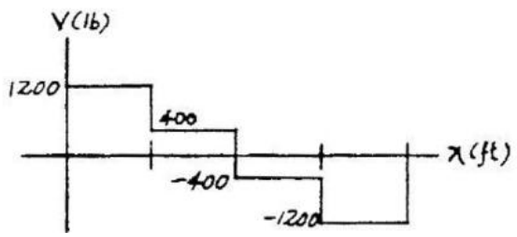

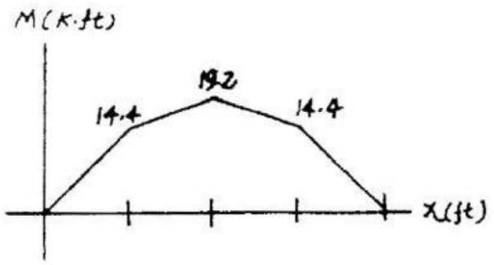

$V_{max} = \pm 1200$ lb **Ans**
$M_{max} = 19.2$ k.ft **Ans**

***4–12.** Determine the internal shear, axial load and bending moment in the beam at points C and D. Assume A is a pin and B is a roller.

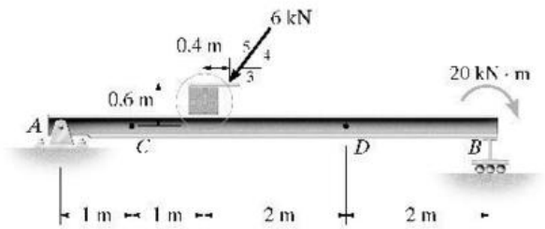

Reactions :

$\zeta + \Sigma M_A = 0;$ $\quad 2.4\left(\frac{4}{5}\right)(6) - (0.6)\left(\frac{3}{5}\right)(6) + 20 - 5B_y = 0$

$B_y = 4.89$ kN

$\pm \Sigma F_x = 0;$ $\quad A_x - \left(\frac{3}{5}\right)(6) = 0;\ A_x = 3.60$ kN

$+\uparrow \Sigma F_y = 0;$ $\quad -A_y - \left(\frac{4}{5}\right)(6) + 4.89 = 0;\ A_y = 0.0933$ kN

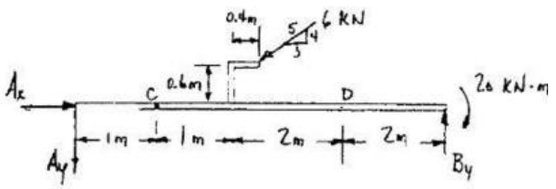

For C :

$\pm \Sigma F_x = 0;$ $\quad 3.6 + N_C = 0;\ N_C = -3.6$ kN **Ans**

$+\uparrow \Sigma F_y = 0;$ $\quad -0.0933 - V_C = 0;\ V_C = -0.0933$ kN **Ans**

$\zeta + \Sigma M_C = 0;$ $\quad M_C + (1)(0.0933) = 0;\ M_C = -0.0933$ kN · m **Ans**

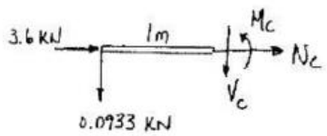

For D :

$\pm \Sigma F_x = 0;$ $\quad N_D = 0$ **Ans**

$+\uparrow \Sigma F_y = 0;$ $\quad V_D + 4.89 = 0;\ V_D = -4.89$ kN **Ans**

$\zeta + \Sigma M_D = 0;$ $\quad M_D - 2(4.89) + 20 = 0$

$M_D = -10.2$ kN · m **Ans**

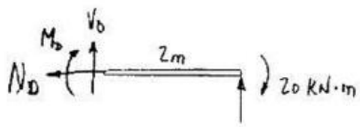

www.e-kitabi.com

c04.qxd 6/26/08 4:12 PM Page 95

© 2009 by R.C. Hibbeler. Published by Pearson Prentice Hall, Pearson Education, Inc., Upper Saddle River, NJ. All rights reserved. This material is protected under all copyright laws as they currently exist. No portion of this material may be reproduced, in any form or by any means, without permission in writing from the publisher.

4–13. Draw the shear and moment diagrams for the beam in Prob. 4–12.

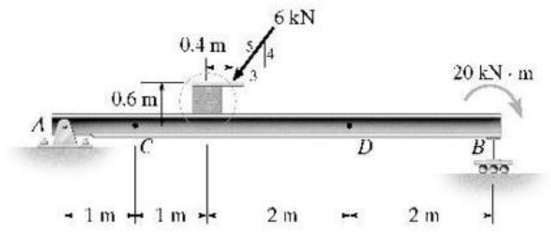

$V_{max} = -4.89$ KN **Ans**
$M_{max} = -20$ KN. m **Ans**

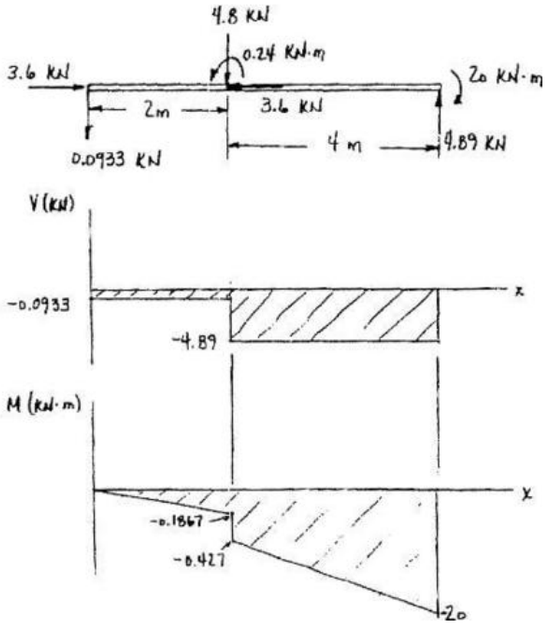

4–14. Determine the internal shear, axial load, and bending moment at point C. Assume the support at A is a pin and B is a roller.

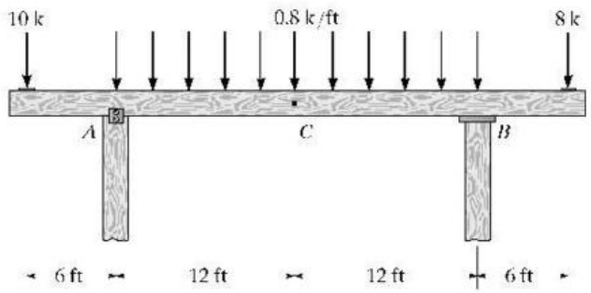

Reactions :

$\curvearrowleft + \Sigma M_B = 0;$ $\quad 24A_y - 30(10) - 12(19.2) + 6(8) = 0$

$A_y = 20.1$ k

$+\downarrow \Sigma F_y = 0;$ $\quad 20.1 - 10 - 19.2 - 8 + B_y = 0$

$B_y = 17.1$ k

$\rightarrow \Sigma F_x = 0;$ $\quad A_x = 0$

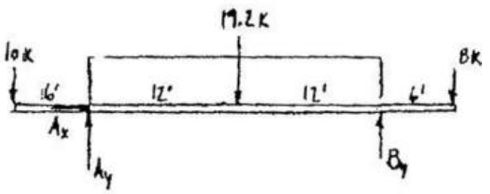

For C :

$+\downarrow \Sigma F_y = 0;$ $\quad V_C + 9.6 - 20.1 + 10 = 0;\ V_C = 0.5$ k **Ans**

$\curvearrowleft + \Sigma M_C = 0;$ $\quad -M_C - 6(9.6) + 12(20.1) - 18(10) = 0$

$M_C = 3.60$ k · ft **Ans**

$\rightarrow \Sigma F_x = 0;$ $\quad N_C = 0$ **Ans**

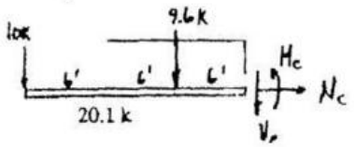

www.e-kitabi.com

c04.qxd 6/26/08 4:12 PM Page 96

© 2009 by R.C. Hibbeler. Published by Pearson Prentice Hall, Pearson Education, Inc., Upper Saddle River, NJ. All rights reserved. This material is protected under all copyright laws as they currently exist. No portion of this material may be reproduced, in any form or by any means, without permission in writing from the publisher.

4–15. Draw the shear and moment diagrams of the beam in Prob. 4–14.

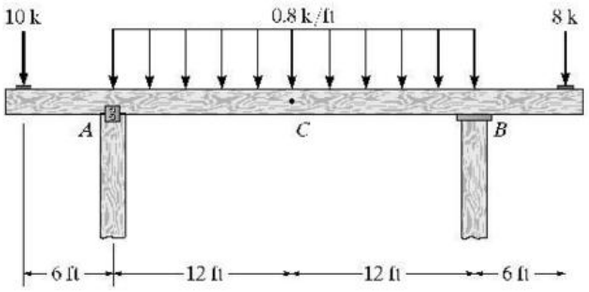

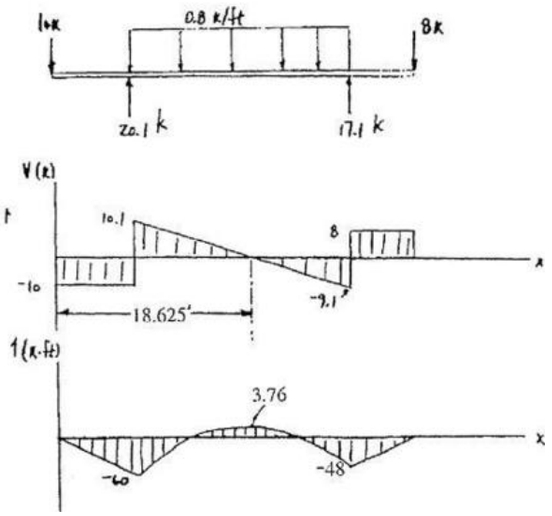

$V_{max} = -10$ k **Ans**
$M_{max} = -60$ k.ft **Ans**

***4–16.** Determine the internal normal force, shear force, and moment at points E and D of the compound beam.

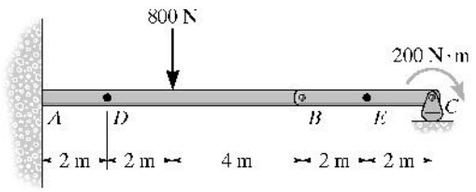

$\stackrel{+}{\rightarrow} \Sigma F_x = 0;\quad N_E = 0$ **Ans**

$+\uparrow \Sigma F_y = 0;\quad V_E + 50 = 0$

$V_E = -50$ N **Ans**

$\left(+\Sigma M_E = 0;\right.\quad -200 + 50\,(2) - M_E = 0$

$M_E = -100$ N · m **Ans**

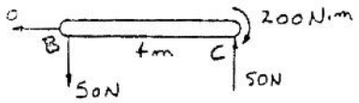

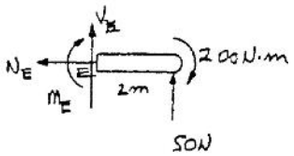

Segment DB:

$\stackrel{+}{\rightarrow} \Sigma F_x = 0;\quad N_D = 0$ **Ans**

$+\uparrow \Sigma F_y = 0;\quad V_D - 800 + 50 = 0$

$V_D = 750$ N **Ans**

$\left(+\Sigma M_D = 0;\right.\quad -800\,(2) + 6\,(50) - M_D = 0$

$M_D = -1300$ N · m $= -1.30$ kN · m **Ans**

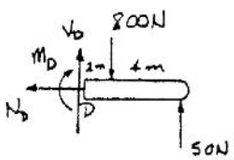

www.e-kitabi.com

c04.qxd 6/26/08 4:12 PM Page 97

© 2009 by R.C. Hibbeler. Published by Pearson Prentice Hall, Pearson Education, Inc., Upper Saddle River, NJ. All rights reserved. This material is protected under all copyright laws as they currently exist. No portion of this material may be reproduced, in any form or by any means, without permission in writing from the publisher.

4–17. The concrete girder supports the two column loads. If the soil pressure under the girder is assumed to be uniform, determine its intensity w and the placement d of the column at B. Draw the shear and moment diagrams for the girder.

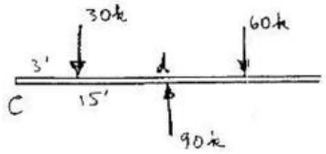

$$w = \frac{60 + 30}{30} = 3.00 \text{ k/ft} \quad \text{Ans}$$

$$\zeta + \Sigma M_C = 0; \quad 90(15) - 30(3) - 60(3 + d) = 0$$

$$d = 18 \text{ ft} \quad \text{Ans}$$

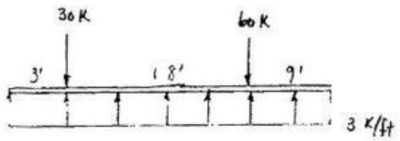

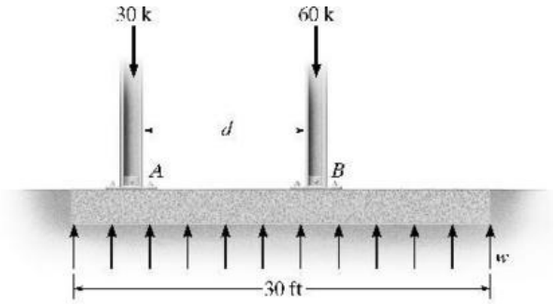

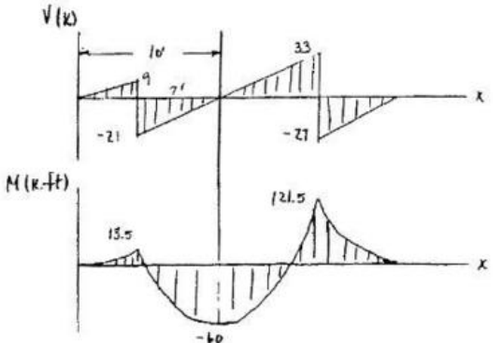

4–18. Determine the internal normal force, shear force, and moment at point C of the beam.

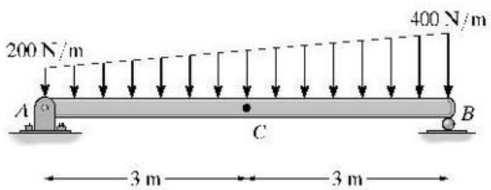

Beam :

$$\zeta + \Sigma M_B = 0; \quad 600\,(2) + 1200\,(3) - A_y\,(6) = 0$$

$$A_y = 800 \text{ N}$$

$$\rightarrow \Sigma F_x = 0; \quad A_x = 0$$

Segment AC :

$$\rightarrow \Sigma F_x = 0; \quad N_C = 0 \quad \text{Ans}$$

$$+\uparrow \Sigma F_y = 0; \quad 800 - 600 - 150 - V_C = 0$$

$$V_C = 50 \text{ N} \quad \text{Ans}$$

$$\zeta + \Sigma M_C = 0; \quad -800\,(3) + 600\,(1.5) + 150\,(1) + M_C = 0$$

$$M_C = 1350 \text{ N} \cdot \text{m} = 1.35 \text{ kN} \cdot \text{m} \quad \text{Ans}$$

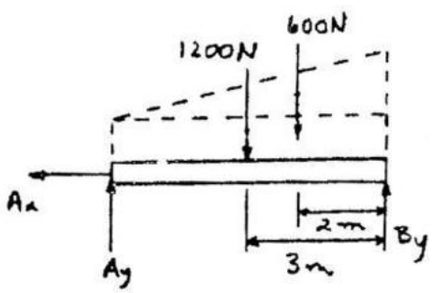

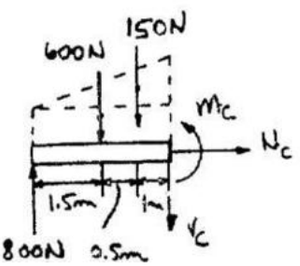

www.e-kitabi.com

© 2009 by R.C. Hibbeler. Published by Pearson Prentice Hall, Pearson Education, Inc., Upper Saddle River, NJ. All rights reserved. This material is protected under all copyright laws as they currently exist. No portion of this material may be reproduced, in any form or by any means, without permission in writing from the publisher.

4–19. Determine the distance a between the supports in terms of the beam's length L so that the bending moment in the *symmetric* shaft is zero at the center. The intensity of the distributed load at the center is w_0.

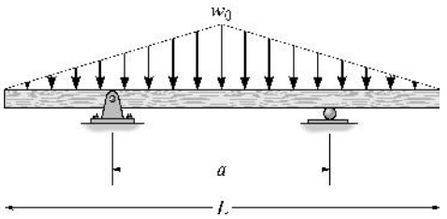

Support reactions : FBD(a)

Moments Function :

$$\left(+\Sigma M = 0;\quad 0 + \frac{1}{2}(w_0)\left(\frac{L}{2}\right)\left(\frac{1}{3}\right)\left(\frac{L}{2}\right) - \frac{1}{4}w_0 L\left(\frac{a}{2}\right) = 0\right.$$

$$a = \frac{L}{3} \qquad \textbf{Ans}$$

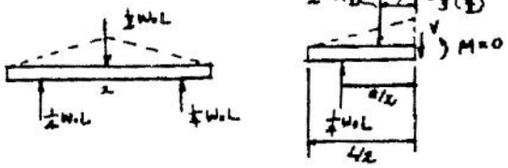

***4–20.** Determine the shear and moment in the beam as a function of x. Assume the support at B is a roller.

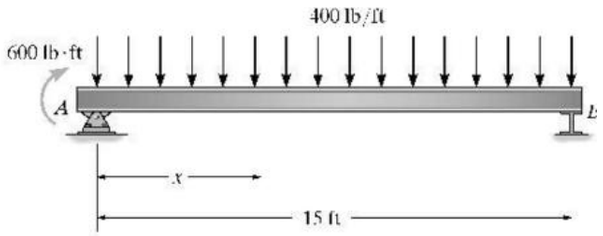

Reactions :

$$\left(+\Sigma M_A = 0;\quad 7.5(6000) - 15B_y + 600 = 0;\quad B_y = 3040\ \text{lb}\right.$$

$$+\uparrow \Sigma F_y = 0;\quad A_y + 3040 - 6000 = 0;\quad A_y = 2960\ \text{lb}$$

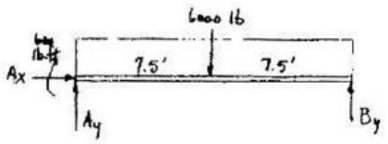

Segment :

$$+\uparrow \Sigma F_y = 0;\quad 2960 - V - 400x = 0$$

$$V = 2960 - 400x \qquad \textbf{Ans}$$

$$\left(+\Sigma M = 0;\quad M + \frac{x}{2}(400x) - x(2960) - 600 = 0\right.$$

$$M = -200x^2 + 2960x + 600 \qquad \textbf{Ans}$$

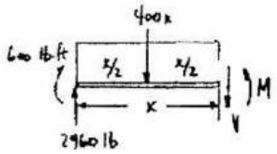

4–21. Draw the shear and moment diagrams for the beam in Prob. 4–20.

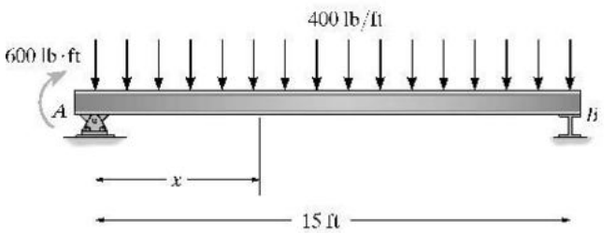

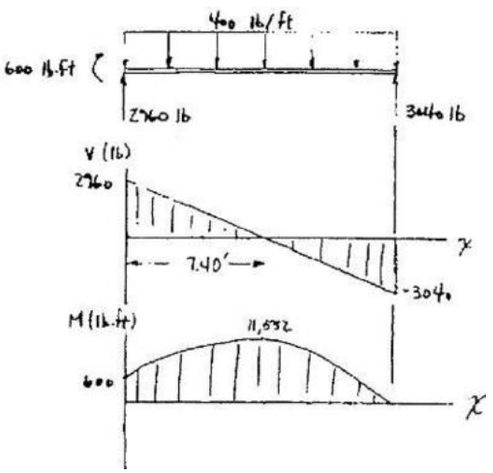

www.e-kitabi.com

c04.qxd 6/26/08 4:12 PM Page 99

© 2009 by R.C. Hibbeler. Published by Pearson Prentice Hall, Pearson Education, Inc., Upper Saddle River, NJ. All rights reserved. This material is protected under all copyright laws as they currently exist. No portion of this material may be reproduced, in any form or by any means, without permission in writing from the publisher.

4–22. Determine the shear and moment in the function of x, where $2\text{ m} < x < 4\text{ m}$.

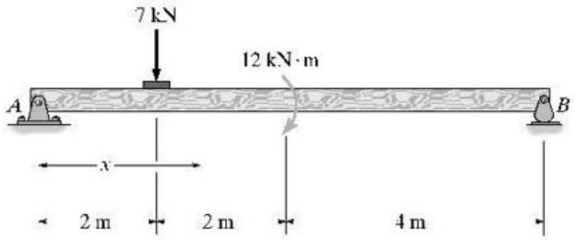

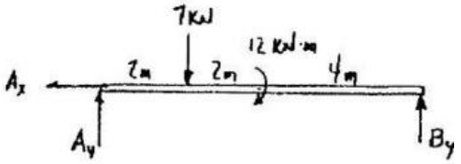

Reaction at A:

$\overset{+}{\rightarrow}\Sigma F_x = 0$: $\quad A_x = 0$

$\circlearrowleft +\Sigma M_B = 0$: $\quad A_y(8) - 7(6) + 12 = 0;\quad A_y = 3.75\text{ kN}$

Segment:

$+\uparrow \Sigma F_y = 0$: $\quad -V + 3.75 - 7 = 0;\quad V = -3.25$ **Ans**

$\circlearrowleft +\Sigma M = 0$: $\quad -M + 3.75x - 7(x-2) = 0$

$M = -3.25x + 14$ **Ans**

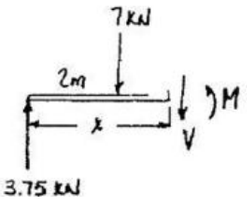

4–23. Draw the shear and moment diagrams for Prob. 4–22.

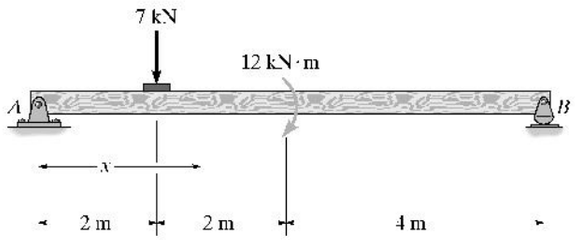

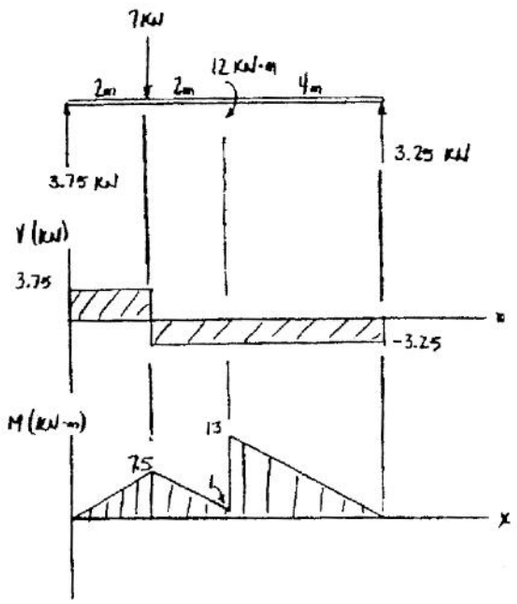

$V_{max} = 3.75\text{ kN}$ **Ans**

$M_{max} = 13\text{ kN·m}$ **Ans**

www.e-kitabi.com

© 2009 by R.C. Hibbeler. Published by Pearson Prentice Hall, Pearson Education, Inc., Upper Saddle River, NJ. All rights reserved. This material is protected under all copyright laws as they currently exist. No portion of this material may be reproduced, in any form or by any means, without permission in writing from the publisher.

***4–24.** Determine the internal shear, axial load, and bending moment at (a) point C, which is just to the left of the roller at A, and (b) point D, which is just to the right of 3000-lb concentrated force. Assume the support at B is a pin.

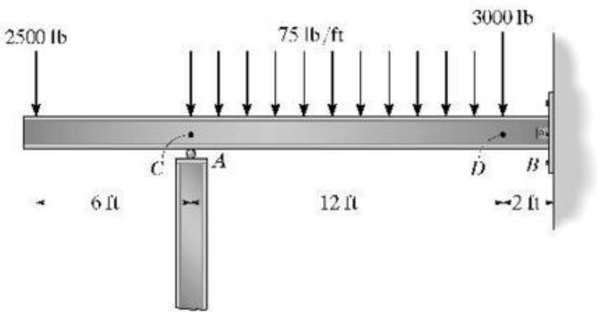

Reactions :

$\stackrel{+}{\rightarrow} \Sigma F_x = 0;$ $\quad B_x = 0$

$\zeta + \Sigma M_B = 0;$ $\quad 2500(20) - A_y(14) + 900(8) + 3000(2) = 0$

$A_y = 4514.29$ lb

$+\uparrow \Sigma F_y = 0;$ $\quad 2500 + 900 + 3000 - 4514.29 - B_y = 0$

$B_y = 1885.71$

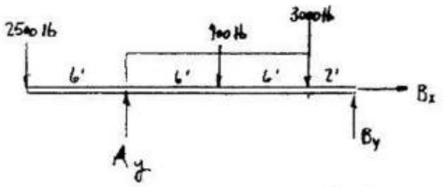

For C :

$+\uparrow \Sigma F_y = 0;$ $\quad -2500 - V_C + 4514.29 = 0$

$V_C = 2014.3$ lb $= 2.01$ k **Ans**

$\zeta + \Sigma M_C = 0;$ $\quad M_C + 2500(6) = 0$

$M_C = -15000$ lb·ft $= -15$ k·ft **Ans**

$\stackrel{+}{\rightarrow} \Sigma F_x = 0;$ $\quad N_C = 0$ **Ans**

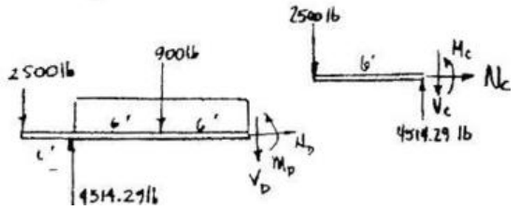

For D :

$+\uparrow \Sigma F_y = 0;$ $\quad -2500 - 900 - V_D + 4514.29 = 0;\ V_D = 1114.3$ lb $= 1.11$ k **Ans**

$\zeta + \Sigma M_D = 0;$ $\quad 900(6) + 2500(18) - 4514.29(12) + M_D = 0$

$M_D = 3771.4$ lb·ft $= 3.77$ k·ft **Ans**

$\stackrel{+}{\rightarrow} \Sigma F_x = 0;$ $\quad N_D = 0$ **Ans**

4–25. Draw the shear and moment diagrams for beam in Prob. 4–24.

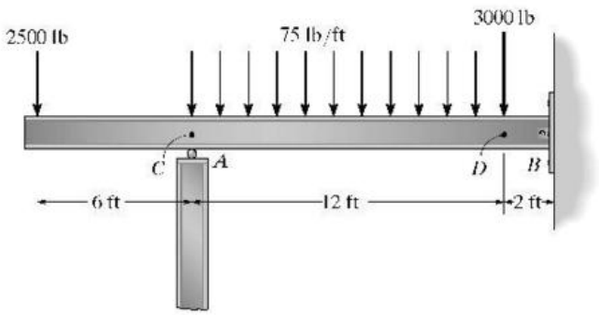

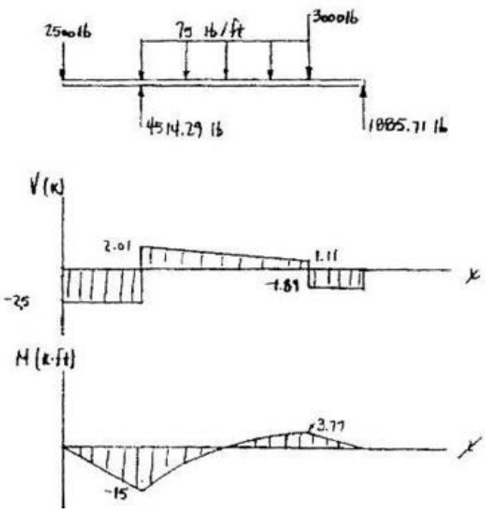

$V_{max} = -2.5$ k **Ans**

$M_{max} = -15$ k·ft **Ans**

www.e-kitabi.com

c04.qxd 6/26/08 4:13 PM Page 101

© 2009 by R.C. Hibbeler. Published by Pearson Prentice Hall, Pearson Education, Inc., Upper Saddle River, NJ. All rights reserved. This material is protected under all copyright laws as they currently exist. No portion of this material may be reproduced, in any form or by any means, without permission in writing from the publisher.

4–26. Determine the shear and moment in the beam as a function of x.

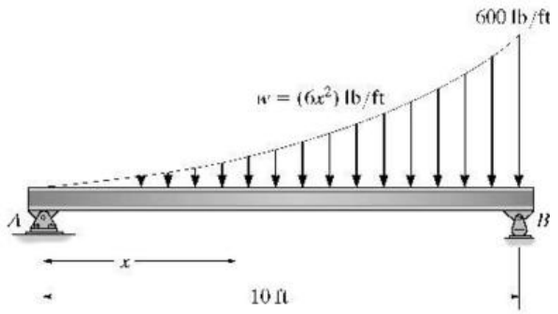

Reaction at $A\updownarrow$

$$F_R = \int_0^{10} 6x^2\,dx = 2x^3\Big|_0^{10} = 2000 \text{ lb}$$

From the table on the inside back cover for a parabola the centroid is at $\frac{1}{4}(10 \text{ ft}) = 2.5 \text{ ft}$.

$\zeta + \Sigma M_B = 0;$ $\quad 2.5(2000) - 10A_y = 0;$ $\quad A_y = 500 \text{ lb}$

$\rightarrow \Sigma F_x = 0;$ $\quad A_x = 0$

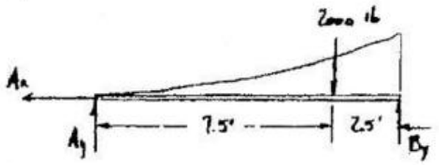

Segment:

$$F = \int_0^x 6x^2\,dx = 2x^3$$

$+\uparrow \Sigma F_y = 0;$ $\quad 500 - 2x^3 - V = 0$

$$V = 500 - 2x^3 \qquad \text{Ans}$$

$\zeta + \Sigma M = 0;$ $\quad M + 2x^3\left(\frac{x}{4}\right) - 500x = 0$

$$M = 500x - 0.5x^4 \qquad \text{Ans}$$

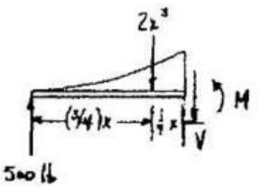

4–27. Draw the shear and moment diagrams for the beam.

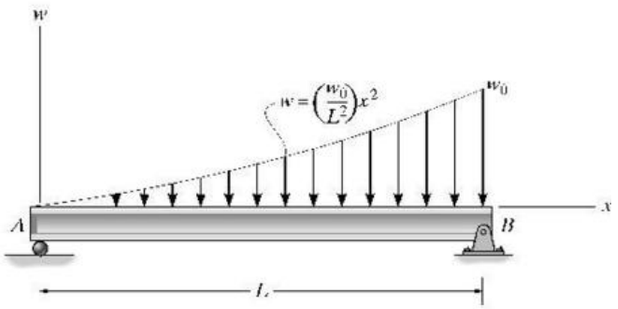

$$F_R = \int_A dA = \int_0^L w\,dx = \frac{w_0}{L^2}\int_0^L x^2\,dx = \frac{w_0 L}{3}$$

$$\bar{x} = \frac{\int_A x\,dA}{\int_A dA} = \frac{\frac{w_0}{L^2}\int_0^L x^3\,dx}{\frac{w_0 L}{3}} = \frac{3L}{4}$$

$+\uparrow \Sigma F_y = 0;$ $\quad \frac{w_0 L}{12} - \frac{w_0 x^3}{3L^2} = 0$

$$x = \left(\frac{1}{4}\right)^{1/3} L = 0.630\,L$$

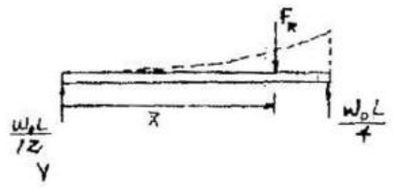

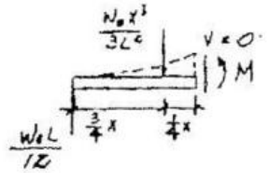

$\zeta + \Sigma M = 0;$ $\quad \frac{w_0 L}{12}(x) - \frac{w_0 x^3}{3L^2}\left(\frac{1}{4}x\right) - M = 0$

$$M = \frac{w_0 L x}{12} - \frac{w_0 x^4}{12L^2}$$

Substitute $x = 0.630L$

$$M = 0.0394\,w_0 L^2$$

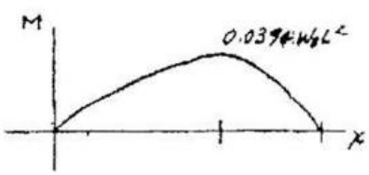

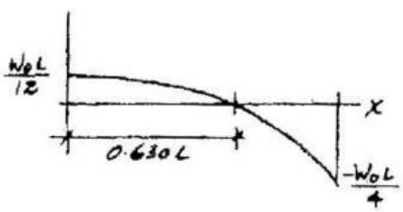

$V_{max} = -w_0 L/4$ Ans

$M_{max} = 0.0394\,w_0 L^2$ Ans

www.e-kitabi.com

© 2009 by R.C. Hibbeler. Published by Pearson Prentice Hall, Pearson Education, Inc., Upper Saddle River, NJ. All rights reserved. This material is protected under all copyright laws as they currently exist. No portion of this material may be reproduced, in any form or by any means, without permission in writing from the publisher.

***4–28.** Draw the shear and moment diagrams for the cantilever beam.

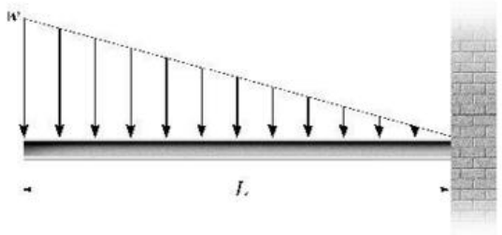

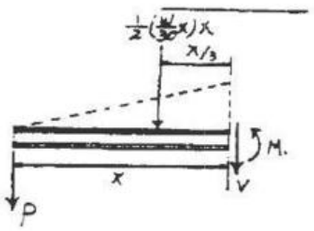

$$+\uparrow \Sigma F_y = 0; \qquad -V - \frac{1}{2}\left(\frac{w}{30}x\right)x - P = 0$$

$$V = -\frac{wx^2}{60} - P \qquad \textbf{Ans}$$

$$\zeta + \Sigma M_S = 0; \qquad M + \frac{1}{2}\left(\frac{w}{30}x\right)x\left(\frac{x}{3}\right) + Px = 0$$

$$M = -\frac{wx^3}{180} - Px \qquad \textbf{Ans}$$

4–29. Draw the shear and moment diagrams for the beam, and determine the shear and moment throughout the beam as functions of x.

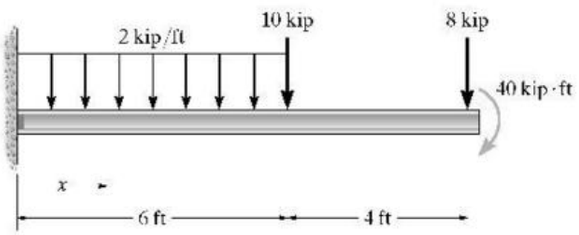

Support Reactions : As shown on FBD.
Shear and Moment Function :

For $0 \le x < 6$ ft

$$+\uparrow \Sigma F_y = 0; \qquad 30.0 - 2x - V = 0$$

$$V = \{30.0 - 2x\} \text{ k} \qquad \textbf{Ans}$$

$$\zeta + \Sigma M_{NA} = 0; \quad M + 216 + 2x\left(\frac{x}{2}\right) - 30.0x = 0$$

$$M = \{-x^2 + 30.0x - 216\} \text{ k·ft} \qquad \textbf{Ans}$$

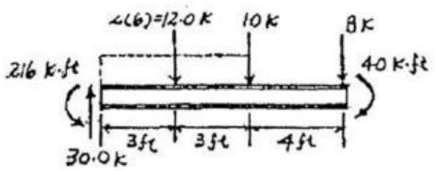

For $6 \text{ ft} < x \le 10$ ft

$$+\uparrow \Sigma F_y = 0; \qquad V - 8 = 0 \qquad V = 8.00 \text{ k} \qquad \textbf{Ans}$$

$$\zeta + \Sigma M_{NA} = 0; \qquad -M - 8(10 - x) - 40 = 0$$

$$M = \{8.00x - 120\} \text{ k·ft} \qquad \textbf{Ans}$$

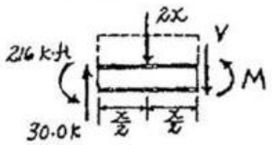

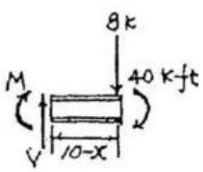

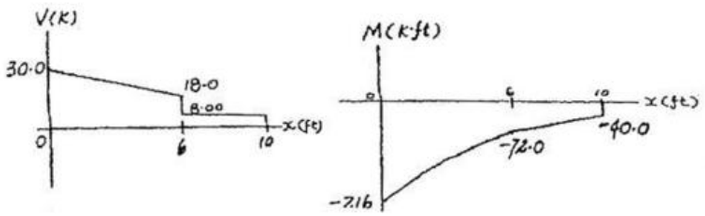

www.e-kitabi.com

c04.qxd 6/26/08 4:13 PM Page 103

© 2009 by R.C. Hibbeler. Published by Pearson Prentice Hall, Pearson Education, Inc., Upper Saddle River, NJ. All rights reserved. This material is protected under all copyright laws as they currently exist. No portion of this material may be reproduced, in any form or by any means, without permission in writing from the publisher.

4–30. Draw the shear and moment diagrams for the beam, and determine the shear and moment throughout the beam as functions of x.

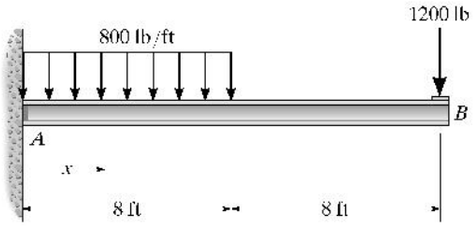

Support Reactions : As shown on FBD.
Shear and Moment Function :

For $0 \le x < 8$ ft

$$+\uparrow \Sigma F_y = 0; \quad 7.60 - 0.800x - V = 0$$
$$V = \{7.60 - 0.800x\} \text{ k} \quad \textbf{Ans}$$

$$\left(+ \Sigma M_{NA} = 0; \quad M + 44.8 + 0.800x\left(\frac{x}{2}\right) - 7.60x = 0\right.$$
$$M = \{-0.400x^2 + 7.60x - 44.8\} \text{ k} \cdot \text{ft} \quad \textbf{Ans}$$

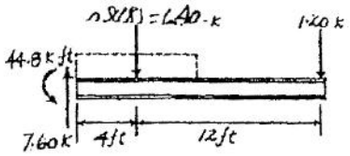

For $8 \text{ ft} < x \le 16$ ft

$$+\uparrow \Sigma F_y = 0; \quad V - 1.20 = 0 \quad V = 1.20 \text{ k} \quad \textbf{Ans}$$

$$\left(+ \Sigma M_{NA} = 0; \quad -M - 1.20(16 - x) = 0\right.$$
$$M = \{1.20x - 19.2\} \text{ k} \cdot \text{ft} \quad \textbf{Ans}$$

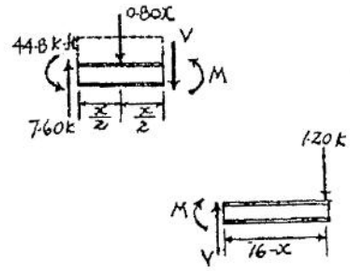

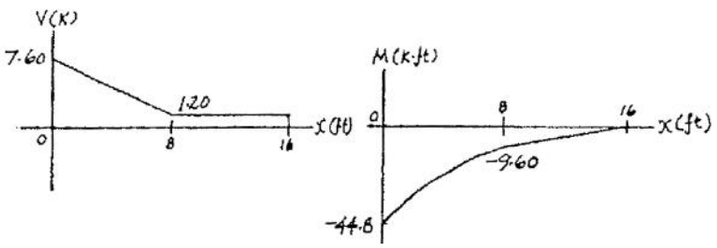

www.e-kitabi.com

© 2009 by R.C. Hibbeler. Published by Pearson Prentice Hall, Pearson Education, Inc., Upper Saddle River, NJ. All rights reserved. This material is protected under all copyright laws as they currently exist. No portion of this material may be reproduced, in any form or by any means, without permission in writing from the publisher.

4–31. Draw the shear and moment diagrams for the tapered cantilever beam.

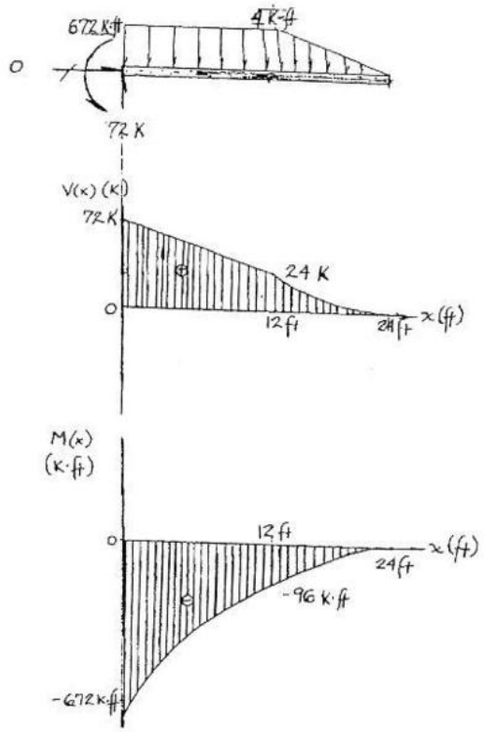

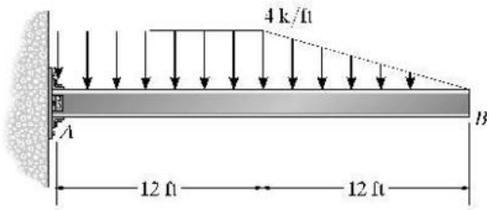

$\overset{+}{\rightarrow} \Sigma F_x = 0;$

$A_x = 0$

$+\uparrow \Sigma F_y = 0;$

$A_y - 48\ \text{k} - 24\ \text{k} = 0$

$A_y = 72\ \text{k} \uparrow$

$\circlearrowleft +\Sigma M_A = 0$

$-48\ \text{k}\,(6\ \text{ft}) - 24\ \text{k}\,(16\ \text{ft}) - M_A = 0$

$M_A = 672\ \text{k}\cdot\text{ft}$ **Ans**

***4–32.** Determine the shear and moment in the floor girder as a function of x, where $4\ \text{ft} < x < 8\ \text{ft}$. Assume the support at A is a roller and B is a pin. The floor boards are simply supported on the joists at C, D, E, F, and G.

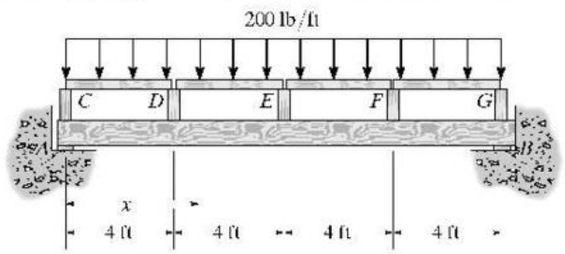

Reaction at A:

$\circlearrowleft +\Sigma M_B = 0;$ $\quad -A_y(16) + 800(12+8+4) + 400(16) = 0$

$A_y = 1600\ \text{lb}$

Segment:

$+\uparrow \Sigma F_y = 0;$ $\quad 1600 - 800 - 400 - V = 0$

$V = 400\ \text{lb}$ **Ans**

$\circlearrowleft +\Sigma M = 0;$ $\quad M - 800(4) - 400(x) = 0$

$M = (400x + 3200)\ \text{lb}\cdot\text{ft}$ **Ans**

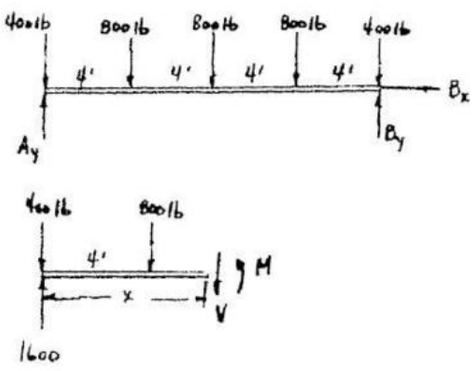

www.e-kitabi.com

c04.qxd 6/26/08 4:13 PM Page 105

© 2009 by R.C. Hibbeler. Published by Pearson Prentice Hall, Pearson Education, Inc., Upper Saddle River, NJ. All rights reserved. This material is protected under all copyright laws as they currently exist. No portion of this material may be reproduced, in any form or by any means, without permission in writing from the publisher.

4–33. Draw the shear and moment diagrams for the floor girder in Prob. 4–32.

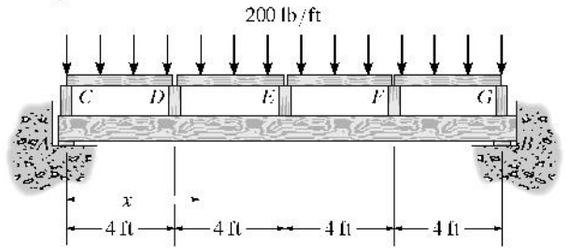

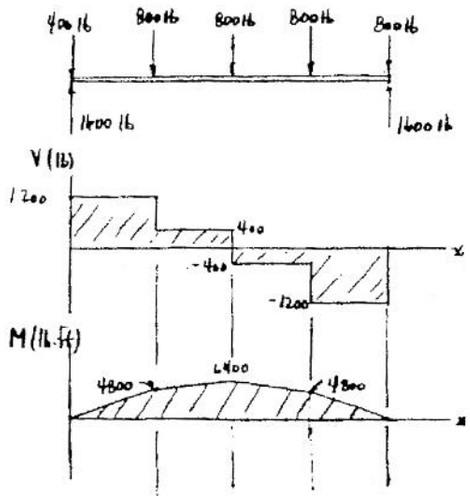

$V_{max} = \pm 1200$ lb Ans

$M_{max} = 6400$ lb·ft Ans

4–34. Determine the shear and moment in the beam as a function of x.

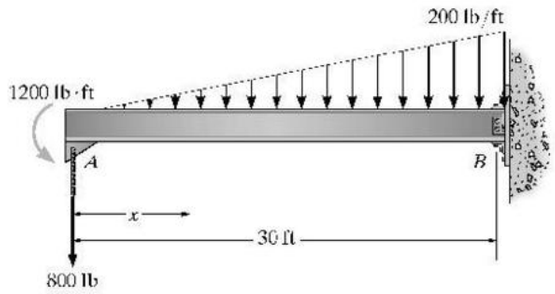

$+\uparrow \Sigma F_y = 0;$ $\quad -V - 800 - \frac{200}{60}x^2 = 0$

$V = (-3.33x^2 - 800)$ lb Ans

$(+\Sigma M = 0;$ $\quad M + \frac{x}{3}\left(\frac{200}{60}x^2\right) + 800x + 1200 = 0$

$M = (-1.11x^3 - 800x - 1200)$ lb·ft Ans

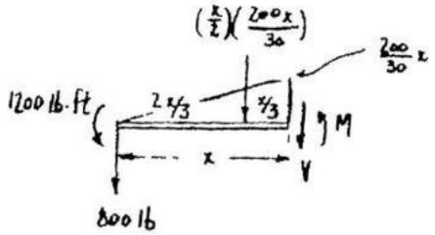

www.e-kitabi.com

c04.qxd 6/26/08 4:13 PM Page 106

© 2009 by R.C. Hibbeler. Published by Pearson Prentice Hall, Pearson Education, Inc., Upper Saddle River, NJ. All rights reserved. This material is protected under all copyright laws as they currently exist. No portion of this material may be reproduced, in any form or by any means, without permission in writing from the publisher.

4–35. Draw the shear and moment diagrams for the beam in Prob. 4–34.

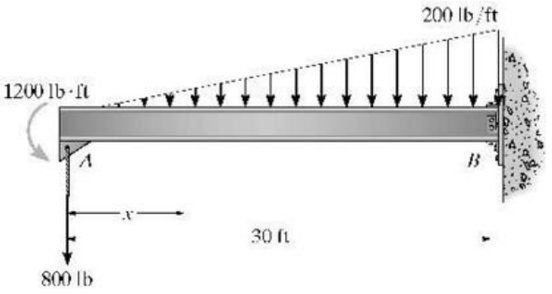

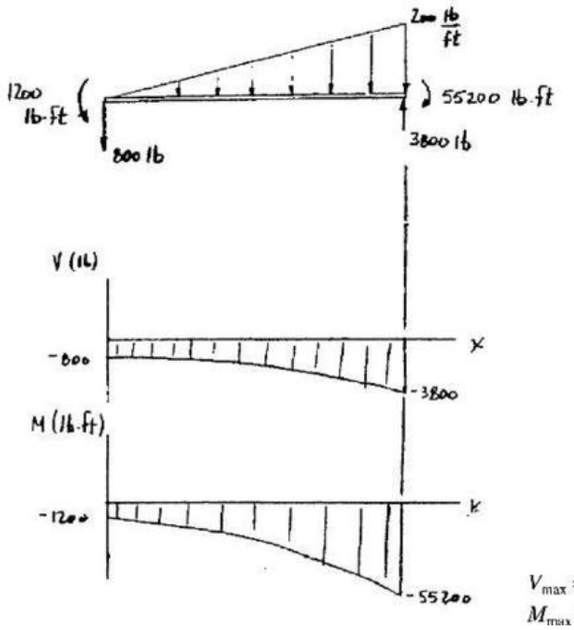

$V_{max} = -3.80$ k Ans

$M_{max} = -55.2$ k·ft Ans

***4–36.** Determine the shear and moment in the tapered beam as a function of x.

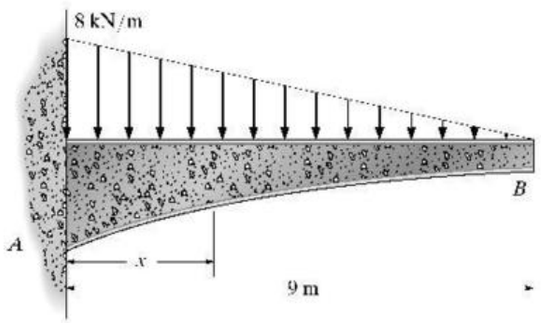

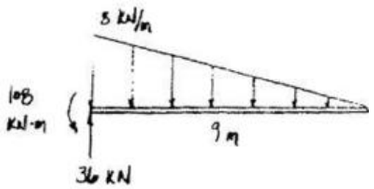

$+\uparrow \Sigma F_y = 0;$ $\quad 36 - \frac{1}{2}\left(\frac{8}{9}x\right)(x) - \frac{8}{9}(9-x)x - V = 0$

$$V = 36 - \frac{4}{9}x^2 - 8x + \frac{8}{9}x^2$$

$$V = 0.444x^2 - 8x + 36 \quad \text{Ans}$$

$\circlearrowleft + \Sigma M = 0:$ $\quad 108 + \frac{1}{2}\left(\frac{8}{9}x\right)(x)\left(\frac{2}{3}x\right) + \frac{8}{9}(9-x)(x)\left(\frac{x}{2}\right) - 36x + M = 0$

$$M = -108 - \frac{8}{27}x^3 - 4x^2 + \frac{8}{18}x^3 + 36x$$

$$M = 0.148x^3 - 4x^2 + 36x - 108 \quad \text{Ans}$$

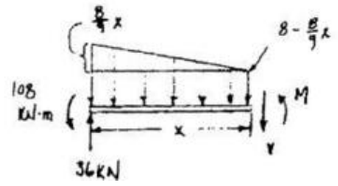

www.e-kitabi.com

© 2009 by R.C. Hibbeler. Published by Pearson Prentice Hall, Pearson Education, Inc., Upper Saddle River, NJ. All rights reserved. This material is protected under all copyright laws as they currently exist. No portion of this material may be reproduced, in any form or by any means, without permission in writing from the publisher.

4–37. Draw the shear and moment diagrams for the beam in Prob. 4–36.

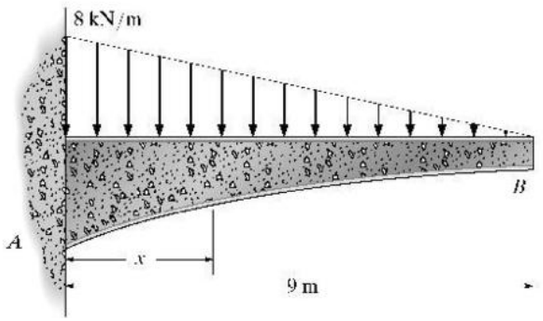

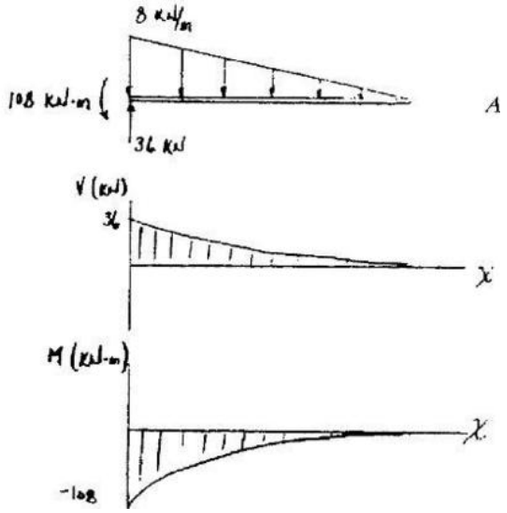

$V_{max} = 36\ \text{kN}$ Ans

$M_{max} = -10.8\ \text{kN·m}$ Ans

4–38. Draw the shear and moment diagrams for the beam, and determine the shear and moment in the beam as functions of x.

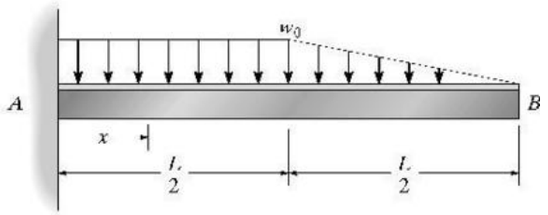

Support Reactions : As shown on FBD.

Shear and Moment Functions :

For $0 \le x < L/2$:

$$+\uparrow \Sigma F_y = 0; \quad \frac{3w_0 L}{4} - w_0 x - V = 0$$

$$V = \frac{w_0}{4}(3L - 4x) \quad \text{Ans}$$

$$\zeta + \Sigma M_{NA} = 0; \quad \frac{7w_0 L^2}{24} - \frac{3w_0 L}{4}x + w_0 x\left(\frac{x}{2}\right) + M = 0$$

$$M = \frac{w_0}{24}\left(-12x^2 + 18Lx - 7L^2\right) \quad \text{Ans}$$

For $L/2 < x \le L$:

$$+\uparrow \Sigma F_y = 0; \quad V - \frac{1}{2}\left[\frac{2w_0}{L}(L-x)\right](L-x) = 0$$

$$V = \frac{w_0}{L}(L-x)^2 \quad \text{Ans}$$

$$\zeta + \Sigma M_{NA} = 0; \quad -M - \frac{1}{2}\left[\frac{2w_0}{L}(L-x)\right](L-x)\left(\frac{L-x}{3}\right) = 0$$

$$M = -\frac{w_0}{3L}(L-x)^3 \quad \text{Ans}$$

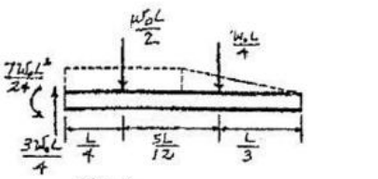

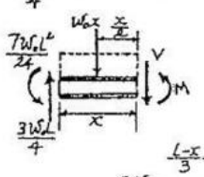

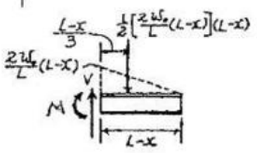

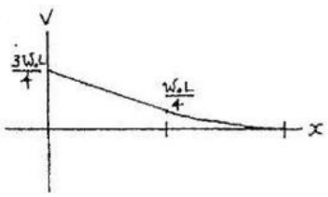

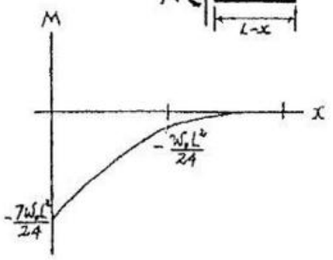

www.e-kitabi.com

c04.qxd 6/26/08 4:13 PM Page 108

© 2009 by R.C. Hibbeler. Published by Pearson Prentice Hall, Pearson Education, Inc., Upper Saddle River, NJ. All rights reserved. This material is protected under all copyright laws as they currently exist. No portion of this material may be reproduced, in any form or by any means, without permission in writing from the publisher.

4–39. A reinforced concrete pier is used to support the stringers for a bridge deck. Draw the shear and moment diagrams for the pier when it is subjected to the stringer loads shown. Assume the columns at A and B exert only vertical reactions on the pier.

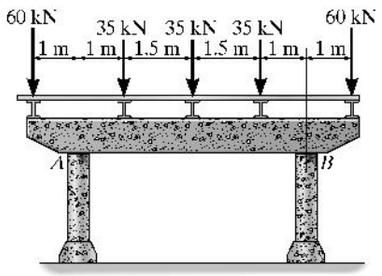

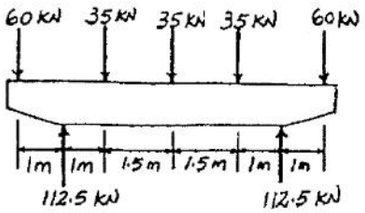

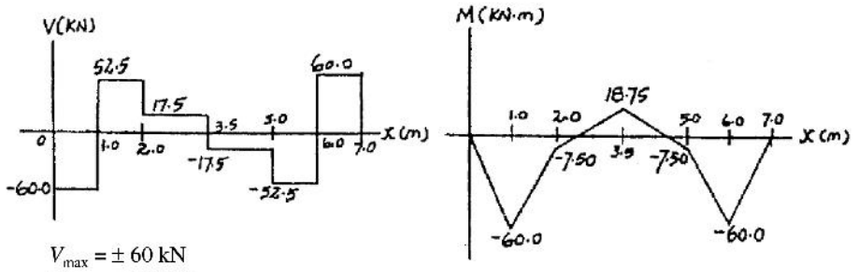

$V_{max} = \pm 60$ kN

$M_{max} = -60$ kN·m

***4–40.** Draw the shear and moment diagrams for the beam. The bearings at A and B only exert vertical reactions on the beam.

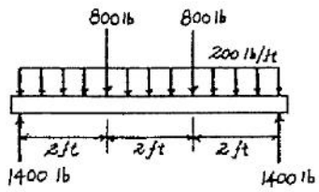

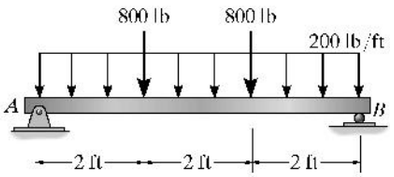

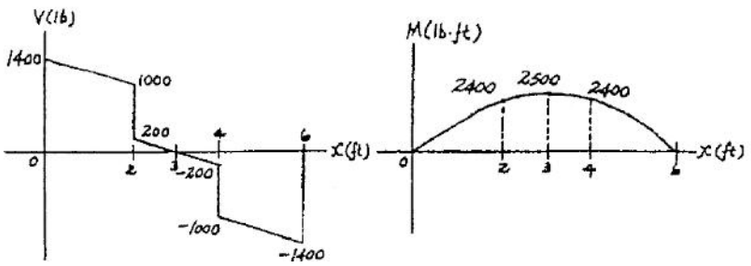

www.e-kitabi.com

c04.qxd 6/26/08 4:13 PM Page 109

© 2009 by R.C. Hibbeler. Published by Pearson Prentice Hall, Pearson Education, Inc., Upper Saddle River, NJ. All rights reserved. This material is protected under all copyright laws as they currently exist. No portion of this material may be reproduced, in any form or by any means, without permission in writing from the publisher.

4–41. Draw the shear and moment diagrams for the beam.

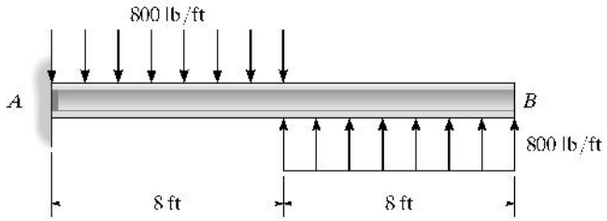

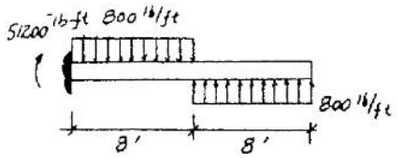

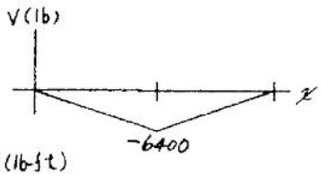

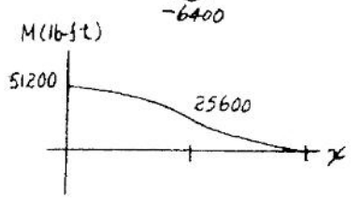

$V_{max} = -6.40$ k Ans

$M_{max} = 51.2$ k·ft Ans

4–42. Determine the shear and moment in the beam as a function of x and then draw the shear and moment diagrams for the beam.

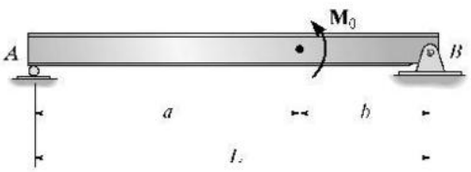

For $0 \le x < a$:

$$M = \frac{M_0}{L}x$$

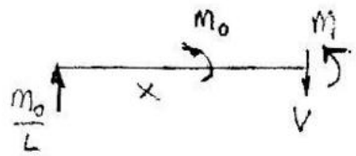

For $a < x \le L$:

$$M = \frac{M_0}{L}x - M_0$$

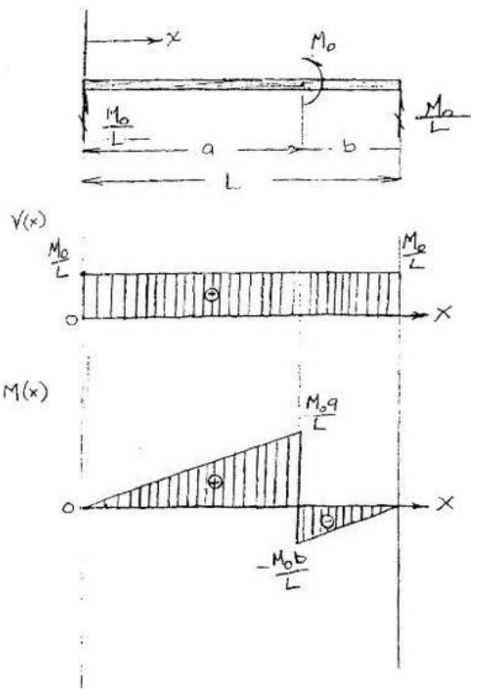

www.e-kitabi.com

c04.qxd 6/26/08 4:13 PM Page 110

© 2009 by R.C. Hibbeler. Published by Pearson Prentice Hall, Pearson Education, Inc., Upper Saddle River, NJ. All rights reserved. This material is protected under all copyright laws as they currently exist. No portion of this material may be reproduced, in any form or by any means, without permission in writing from the publisher.

4–43. The beam is subjected to the uniformly distributed moment m (moment/length). Draw the shear and moment diagrams for the beam.

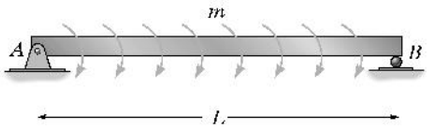

Support Reactions : As shown on FBD.
Shear and Moment Function :

$+\uparrow \Sigma F_y = 0; \quad -m - V = 0 \quad V = -m$ **Ans**

$+\circlearrowleft \Sigma M_{NA} = 0; \quad M + m(x) - mx = 0 \quad M = 0$ **Ans**

Shear and Moment Diagram :

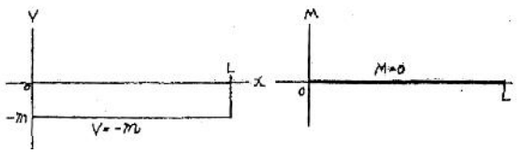

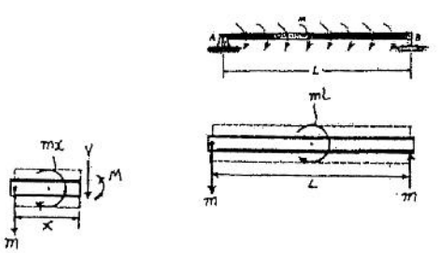

***4–44.** The flooring system for a building consists of a girder that supports laterally running floor beams, which in turn support the longitudinal simply supported floor slabs. Draw the shear and moment diagrams for the girder. Assume the girder is simply supported.

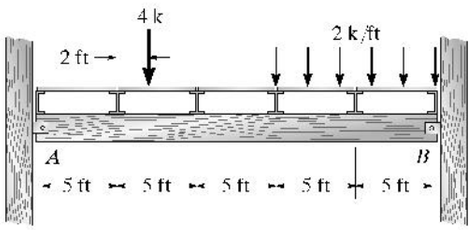

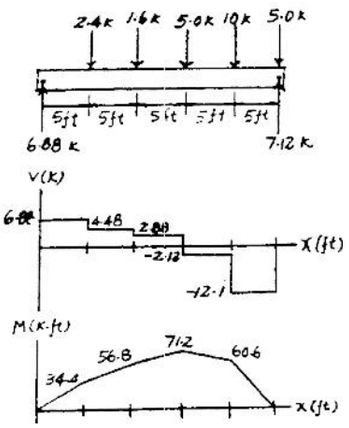

4–45. Draw the shear and moment diagrams for the beam.

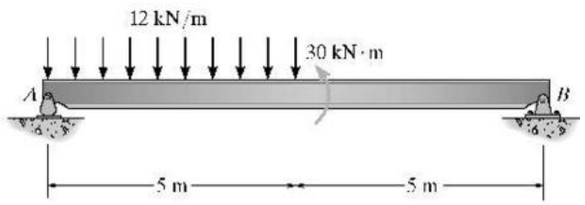

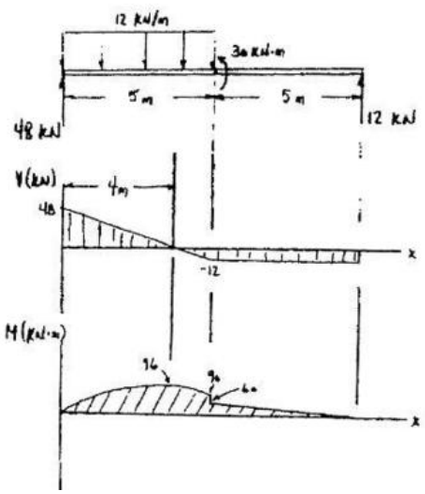

$V_{max} = 48$ KN **Ans**

$M_{max} = 96$ KN.m **Ans**

www.e-kitabi.com

© 2009 by R.C. Hibbeler. Published by Pearson Prentice Hall, Pearson Education, Inc., Upper Saddle River, NJ. All rights reserved. This material is protected under all copyright laws as they currently exist. No portion of this material may be reproduced, in any form or by any means, without permission in writing from the publisher.

4–46. Draw the shear and moment diagrams of the beam. Assume the support at B is a pin and A is a roller.

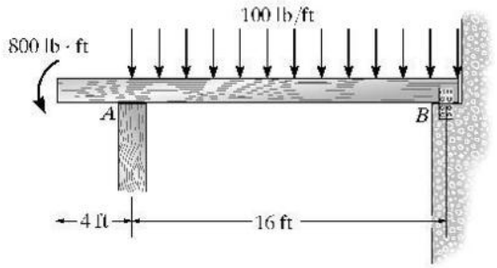

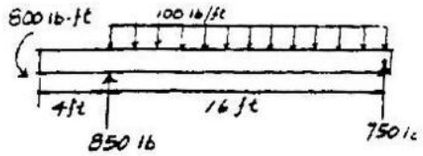

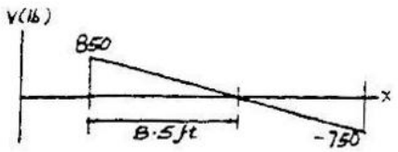

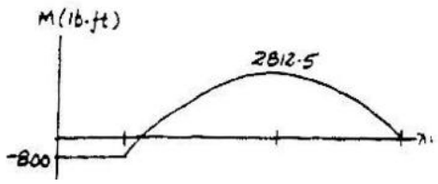

$V_{max} = 850$ lb Ans

$M_{max} = 2.81$ K.ft Ans

4–47. Draw the shear and moment diagrams for the beam. Assume the support at B is a pin.

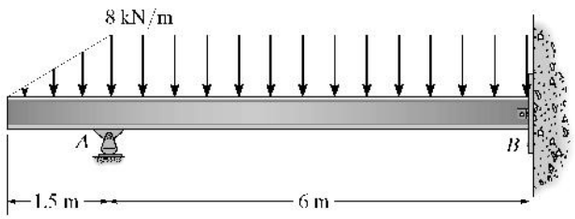

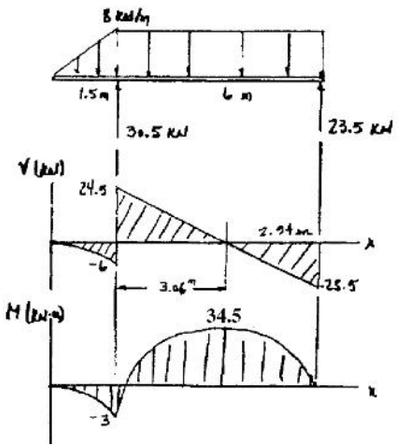

$V_{max} = 24.5$ KN Ans

$M_{max} = 34.5$ KN.m Ans

www.e-kitabi.com

© 2009 by R.C. Hibbeler. Published by Pearson Prentice Hall, Pearson Education, Inc., Upper Saddle River, NJ. All rights reserved. This material is protected under all copyright laws as they currently exist. No portion of this material may be reproduced, in any form or by any means, without permission in writing from the publisher.

***4–48.** Draw the shear and moment diagrams for the beam.

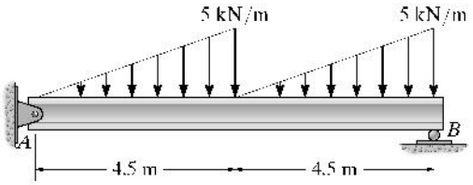

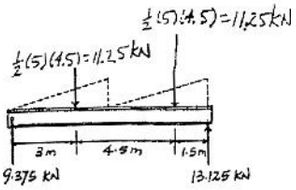

From FBD (a)

$+\uparrow \Sigma F_y = 0; \quad 9.375 - 0.5556x^2 = 0 \quad x = 4.108 \text{ m}$

$\left(+ \Sigma M_{NA} = 0: \quad M + (0.5556)\left(4.108^2\right)\left(\frac{4.108}{3}\right) - 9.375(4.108) = 0\right.$

$M = 25.67 \text{ kN} \cdot \text{m}$ **Ans**

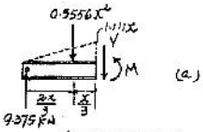

From FBD (b)

$\left(+ \Sigma M_{NA} = 0: \quad M + 11.25(1.5) - 9.375(4.5) = 0\right.$

$M = 25.31 \text{ kN} \cdot \text{m}$ **Ans**

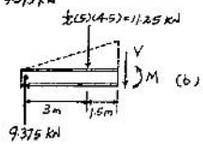

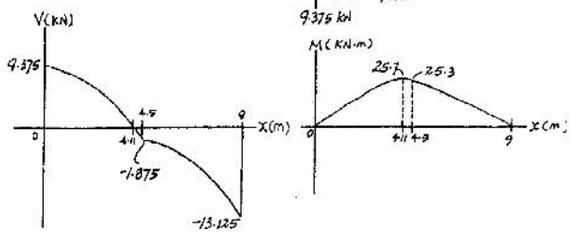

4–49. Draw the shear and moment diagrams for the beam. There is a pin at C.

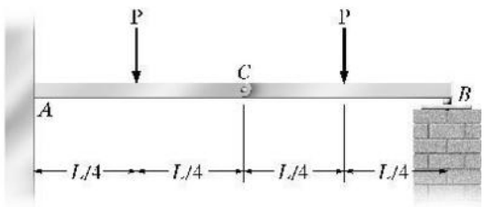

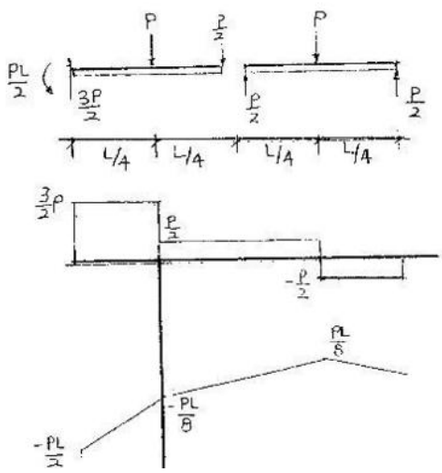

$V_{max} = \frac{3}{2} P$ **Ans**

$M_{max} = \frac{1}{8} PL$ **Ans**

www.e-kitabi.com

c04.qxd 6/26/08 4:13 PM Page 113

© 2009 by R.C. Hibbeler. Published by Pearson Prentice Hall, Pearson Education, Inc., Upper Saddle River, NJ. All rights reserved. This material is protected under all copyright laws as they currently exist. No portion of this material may be reproduced, in any form or by any means, without permission in writing from the publisher.

4–50. The concrete beam supports the wall, which subjects the beam to the uniform loading shown. The beam itself has cross-sectional dimensions of 12 in. by 26 in. and is made from concrete having a specific weight of $\gamma = 150$ lb/ft^3. Draw the shear and moment diagrams for the beam and specify the maximum and minimum moments in the beam. Neglect the weight of the steel reinforcement in the beam.

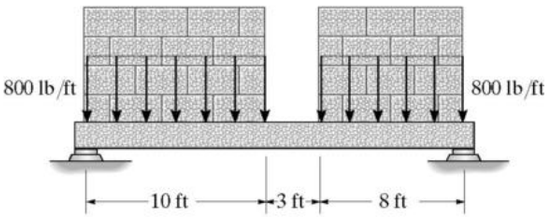

Weight of beam

$$A = \frac{12(26)}{144} = 2.1667 \text{ ft}^2$$

$$w_{conc} = 150(2.1667) = 325 \text{ lb/ft}$$

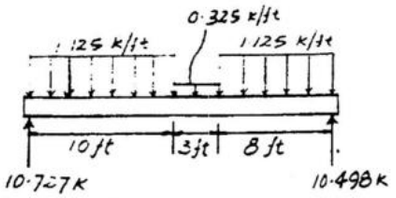

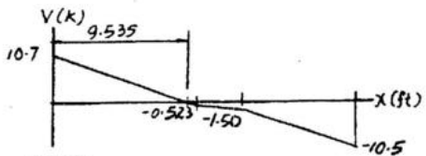

$V_{max} = 10.7$ K Ans

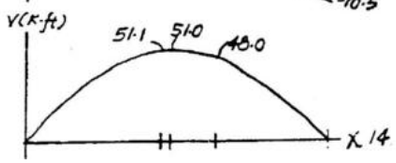

$V_{max} = 51.0$ K.ft Ans

4–51. Draw the shear and moment diagrams for the beam.

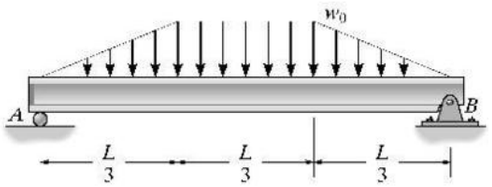

Support Reactions : As shown on FBD.
Shear and Moment Diagram : Shear and moment at $x = L/3$ can be determined using the method of sections.

$$+\uparrow \Sigma F_y = 0; \quad \frac{w_0 L}{3} - \frac{w_0 L}{6} - V = 0 \quad V = \frac{w_0 L}{6}$$

$$(+\Sigma M_{NA} = 0; \quad M + \frac{w_0 L}{6}\left(\frac{L}{9}\right) - \frac{w_0 L}{3}\left(\frac{L}{3}\right) = 0$$

$$M = \frac{5 w_0 L^2}{54}$$

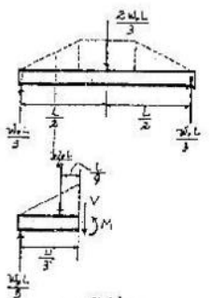

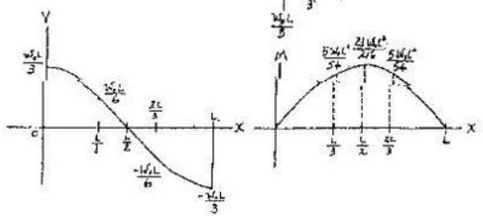

$V_{max} = w_0 L/3$ Ans

$M_{max} = 23 w_0 L^2/216$ Ans

www.e-kitabi.com

© 2009 by R.C. Hibbeler. Published by Pearson Prentice Hall, Pearson Education, Inc., Upper Saddle River, NJ. All rights reserved. This material is protected under all copyright laws as they currently exist. No portion of this material may be reproduced, in any form or by any means, without permission in writing from the publisher.

***4–52.** Draw the shear and moment diagrams for the beam.

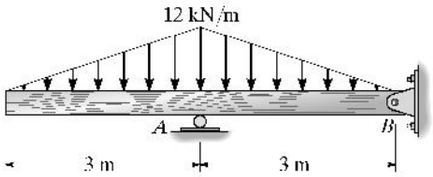

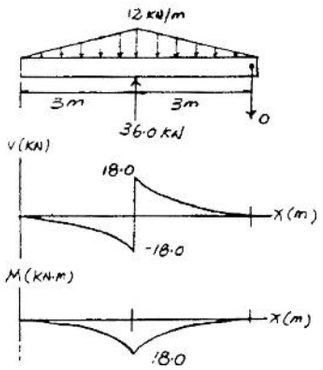

4–53. Draw the shear and moment diagrams for the beam.

$$\zeta + \Sigma M = 0; \quad M - \frac{w_0 L}{4}\left(\frac{L}{3}\right) = 0; \quad M = \frac{w_0 L^2}{12}$$

$V_{max} = w_0 L/2$ **Ans**

$M_{max} = w_0 L^2/12$ **Ans**

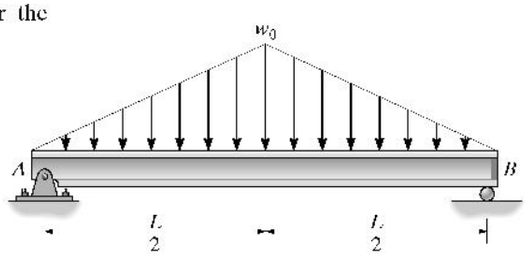

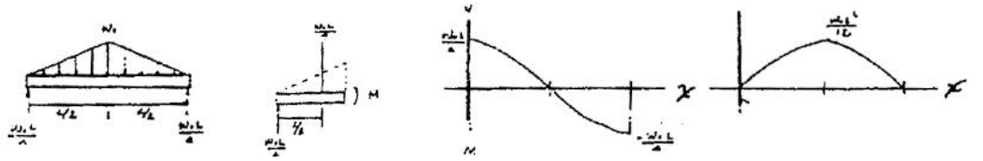

4–54. Draw the shear and moment diagrams for the compound beam. The segments are connected by pins at B and D.

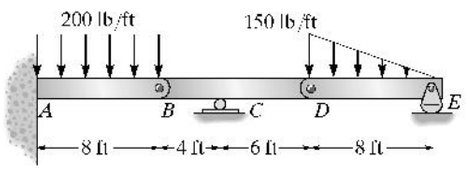

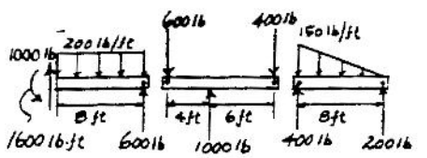

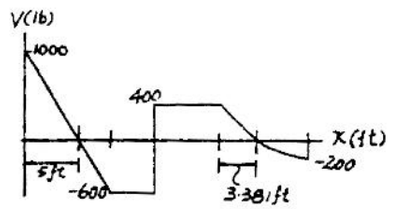

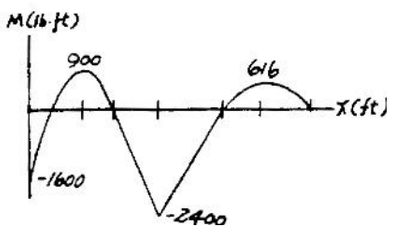

www.e-kitabi.com

c04.qxd 6/26/08 4:13 PM Page 115

© 2009 by R.C. Hibbeler. Published by Pearson Prentice Hall, Pearson Education, Inc., Upper Saddle River, NJ. All rights reserved. This material is protected under all copyright laws as they currently exist. No portion of this material may be reproduced, in any form or by any means, without permission in writing from the publisher.

4–55. Draw the shear and moment diagrams for the beam.

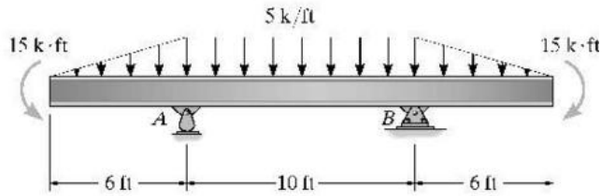

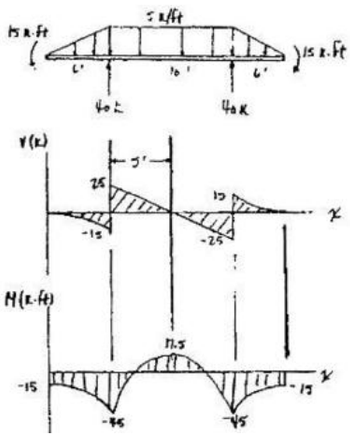

$V_{max} = \pm 25$ K Ans

$M_{max} = -45$ K.ft Ans

***4–56.** Draw the shear and moment diagrams for the compound beam. It is supported by a smooth plate at A, which slides within the groove and so it cannot support a vertical force, although it can support a moment and axial load.

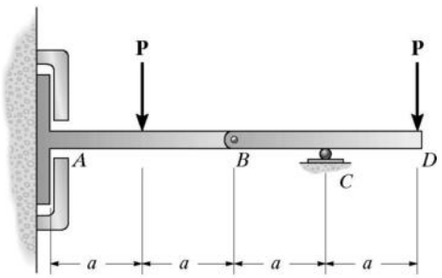

Support Reactions :
From the FBD of segment BD

$\left(+\Sigma M_C = 0;\right.$ $B_y(a) - P(a) = 0$ $B_y = P$

$+\uparrow \Sigma F_y = 0;$ $C_y - P - P = 0$ $C_y = 2P$

$\rightarrow \Sigma F_x = 0;$ $B_x = 0$

From the FBD of segment AB

$\left(+\Sigma M_A = 0;\right.$ $P(2a) - P(a) - M_A = 0$ $M_A = Pa$

$+\uparrow \Sigma F_y = 0;$ $P - P = 0$ (equilibrium is satisfied!)

Shear and Moment Diagram :

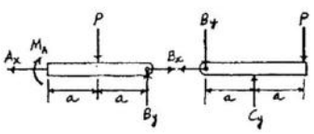

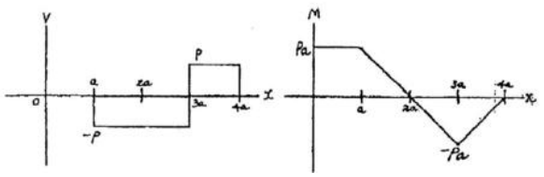

www.e-kitabi.com

© 2009 by R.C. Hibbeler. Published by Pearson Prentice Hall, Pearson Education, Inc., Upper Saddle River, NJ. All rights reserved. This material is protected under all copyright laws as they currently exist. No portion of this material may be reproduced, in any form or by any means, without permission in writing from the publisher.

4–57. The boards *ABC* and *BCD* are loosely bolted together as shown. If the bolts exert only vertical reactions on the boards, determine the reactions at the supports and draw the shear and moment diagrams for each board.

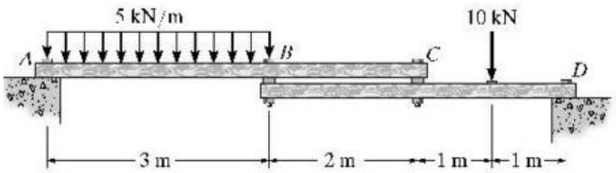

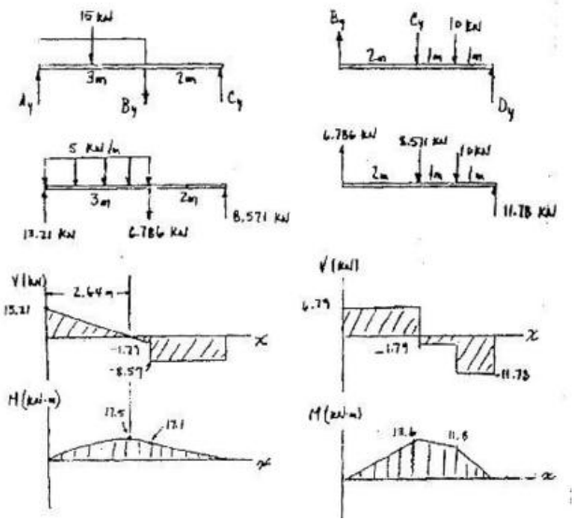

Using the FBDs of members *ABC* and *BCD*:

$\zeta + \Sigma M_A = 0;$ $C_y(5) - B_y(3) - 15(1.5) = 0$

$\zeta + \Sigma M_D = 0;$ $C_y(2) - B_y(4) + 10(1.0) = 0$

$C_y = 8.571$ kN; $B_y = 6.786$ kN Ans

$+\uparrow \Sigma F_y = 0;$ $A_y - 15 + 8.571 - 6.786 = 0$

$A_y = 13.21$ kN Ans

$+\uparrow \Sigma F_y = 0;$ $D_y - 10 - 8.571 + 6.786 = 0$

$D_y = 11.78$ kN Ans

4–58. Draw the shear and moment diagrams for the compound beam. The segments are connected by a pin at *B*.

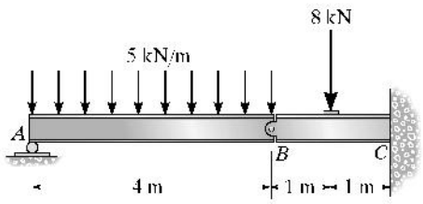

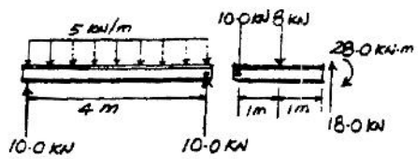

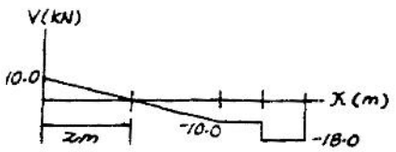

$V_{max} = -18$ KN Ans

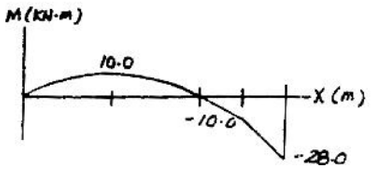

$M_{max} = -28$ KN.m Ans

www.e-kitabi.com

© 2009 by R.C. Hibbeler. Published by Pearson Prentice Hall, Pearson Education, Inc., Upper Saddle River, NJ. All rights reserved. This material is protected under all copyright laws as they currently exist. No portion of this material may be reproduced, in any form or by any means, without permission in writing from the publisher.

4–59. Determine the internal shear, axial load, and bending moment in the beam at points D and E. Point E is just to the right of the 4-k load. Assume A is a roller, the splice at B is a pin, C is a fixed support.

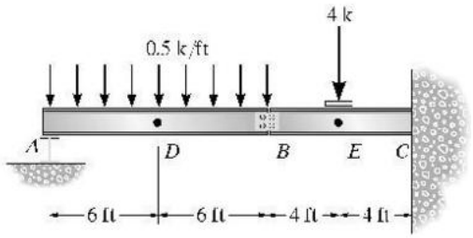

Segment AB:

$\rightarrow \Sigma F_x = 0;$ $B_x = 0$

$(+\Sigma M_B = 0;$ $-A_y(12) + 6.0(6) = 0;\ A_y = 3.0\ \text{k}$

$+\uparrow \Sigma F_y = 0;$ $3.0 - 6.0 + B_y = 0;\ B_y = 3.0\ \text{k}$

Segment BC:

$\rightarrow \Sigma F_x = 0;$ $C_x = 0$

$+\uparrow \Sigma F_y = 0;$ $-3.0 - 4 + C_y = 0;\ C_y = 7.0\ \text{k}$

$(+\Sigma M_C = 0;$ $3.0(8) + 4(4) - M_C = 0;\ M_C = 40.0\ \text{k}\cdot\text{ft}$

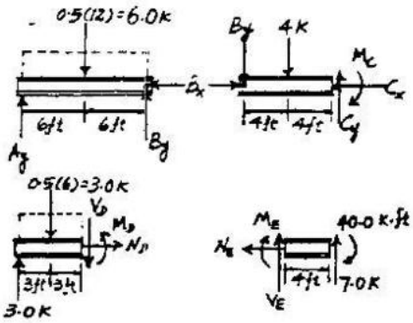

Segment AD:

$\rightarrow \Sigma F_x = 0;$ $N_D = 0$ Ans

$+\uparrow \Sigma F_y = 0;$ $3.0 - 3.0 - V_D = 0;\ V_D = 0$ Ans

$(+\Sigma M_D = 0;$ $-3.0(6) + 3.0(3) + M_D = 0$

$M_D = 9.00\ \text{k}\cdot\text{ft}$ Ans

Segment EC:

$\rightarrow \Sigma F_x = 0;$ $N_E = 0$ Ans

$+\uparrow \Sigma F_y = 0;$ $V_E + 7.0 = 0;\ V_E = -7.00\ \text{k}$ Ans

$(+\Sigma M_E = 0;$ $-M_E - 40.0 + 7.0(4) = 0$

$M_E = -12.0\ \text{k}\cdot\text{ft}$ Ans

***4–60.** Draw the shear and moment diagrams of the beam CDE. Assume the support at A is a roller and B is a pin. There are fixed-connected joints at D and E.

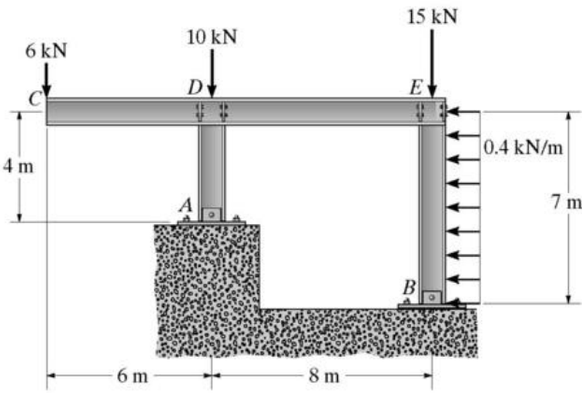

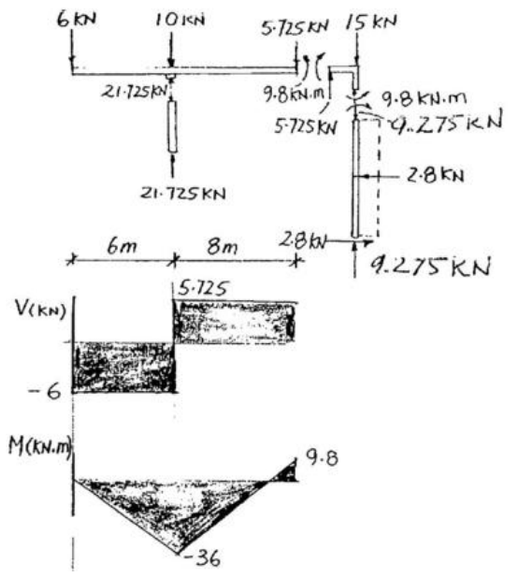

www.e-kitabi.com

c04.qxd 6/26/08 4:13 PM Page 118

© 2009 by R.C. Hibbeler. Published by Pearson Prentice Hall, Pearson Education, Inc., Upper Saddle River, NJ. All rights reserved. This material is protected under all copyright laws as they currently exist. No portion of this material may be reproduced, in any form or by any means, without permission in writing from the publisher.

4–61. The overhanging beam has been fabricated with projected arm BD on it. Draw the shear and moment diagrams for the beam ABC if it supports a load of 800 lb. *Hint:* The loading in the supporting strut DE must be replaced by equivalent loads at point B on the axis of the beam.

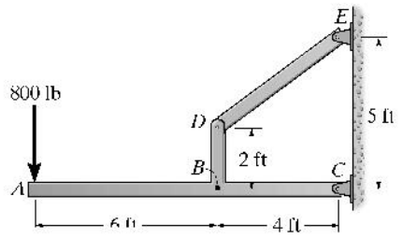

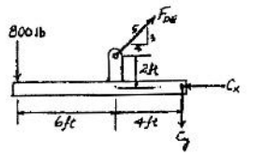

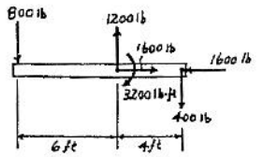

Support Reactions :

$$\zeta + \Sigma M_C = 0; \quad 800(10) - \frac{3}{5}F_{DE}(4) - \frac{4}{5}F_{DE}(2) = 0$$

$$F_{DE} = 2000 \text{ lb}$$

$$+\uparrow \Sigma F_y = 0; \quad -800 + \frac{3}{5}(2000) - C_y = 0 \qquad C_y = 400 \text{ lb}$$

$$\stackrel{+}{\rightarrow} \Sigma F_x = 0; \quad -C_x + \frac{4}{5}(2000) = 0 \qquad C_x = 1600 \text{ lb}$$

Shear and Moment Diagram :

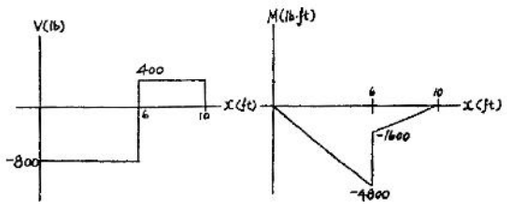

$$V_{\max} = -800 \text{ lb} \qquad \textbf{Ans}$$

$$M_{\max} = -4000 \text{ lb.ft} \qquad \textbf{Ans}$$

www.e-kitabi.com

c04.qxd 6/26/08 4:13 PM Page 119

© 2009 by R.C. Hibbeler. Published by Pearson Prentice Hall, Pearson Education, Inc., Upper Saddle River, NJ. All rights reserved. This material is protected under all copyright laws as they currently exist. No portion of this material may be reproduced, in any form or by any means, without permission in writing from the publisher.

4–62. Draw the shear and moment diagrams for each member of the frame. Assume the support at A is a pin and D is a roller.

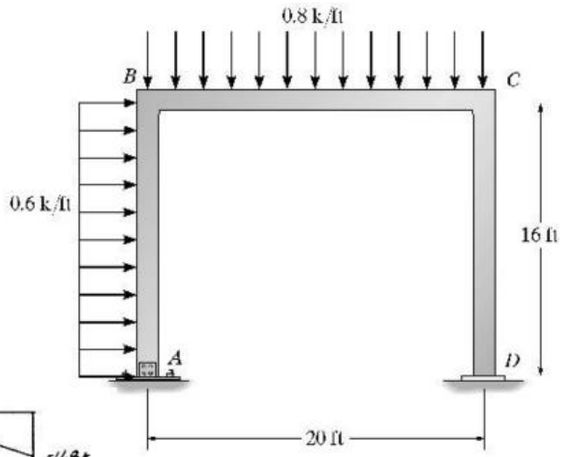

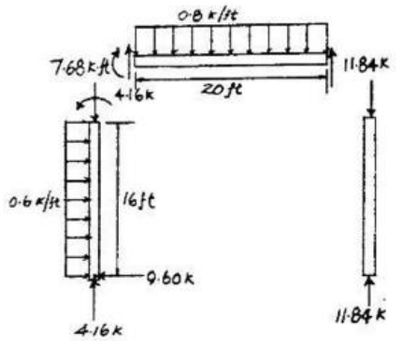

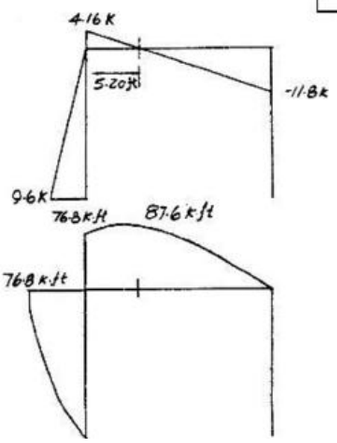

$V_{max} = -11.8$ K Ans

$M_{max} = -87.6$ K.ft Ans

4–63. Draw the shear and moment diagrams for each member of the frame. Assume A is fixed, the joint at B is a pin, and support C is a roller.

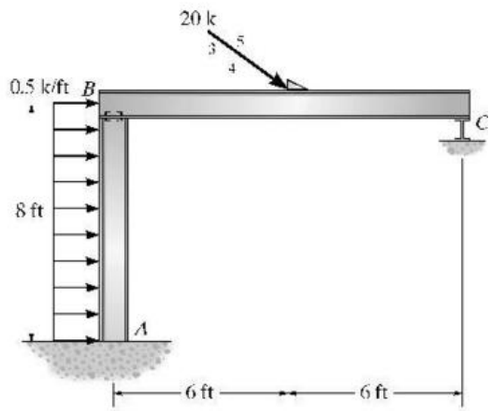

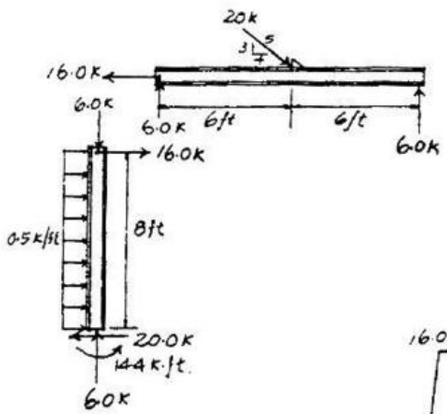

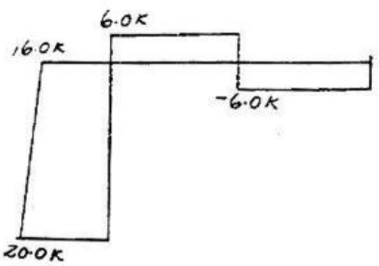

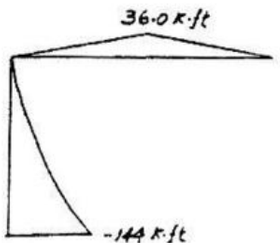

$V_{max} = 20.0$ K Ans

$M_{max} = -144$ K.ft Ans

www.e-kitabi.com

© 2009 by R.C. Hibbeler. Published by Pearson Prentice Hall, Pearson Education, Inc., Upper Saddle River, NJ. All rights reserved. This material is protected under all copyright laws as they currently exist. No portion of this material may be reproduced, in any form or by any means, without permission in writing from the publisher.

***4–64.** Draw the shear and moment diagrams for each member of the frame. Assume the joint at A is a pin and support C is a roller. The joint at B is fixed. The wind load is transferred to the members at the girts and purlins from the simply supported wall and roof segments.

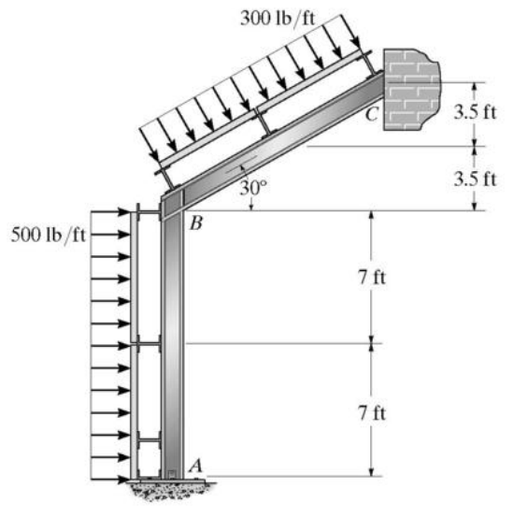

Support reactions:

$\overset{+}{\circlearrowleft} \Sigma M_A = 0;$ $\quad -3.5(7) - 1.75(14) - (4.20)(\sin 30°)(7\cos 30°) - 4.20(\sin 30°)(14+3.5) + C_x(21) = 0$

$C_x = 5.133 \text{ kN}$

$\overset{+}{\rightarrow} \Sigma F_x = 0;$ $\quad 1.75 + 3.5 + 1.75 + 4.20 \sin 30° - 5.133 - A_x = 0$

$A_x = 3.967 \text{ kN}$

$+\uparrow \Sigma F_y = 0;$ $\quad A_y - 4.20\cos 30° = 0$

$A_y = 3.64 \text{ kN}$

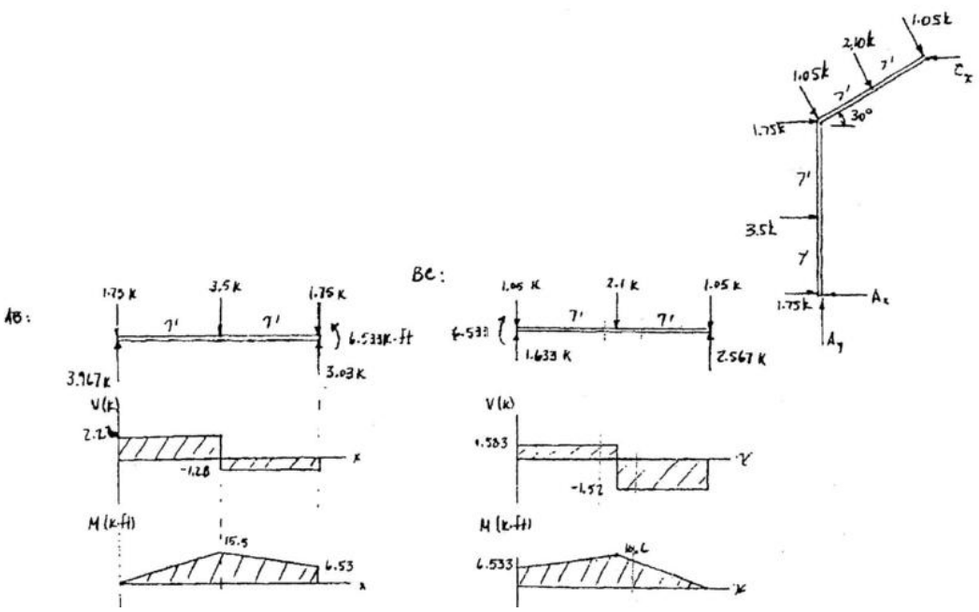

www.e-kitabi.com

c04.qxd 6/26/08 4:13 PM Page 121

© 2009 by R.C. Hibbeler. Published by Pearson Prentice Hall, Pearson Education, Inc., Upper Saddle River, NJ. All rights reserved. This material is protected under all copyright laws as they currently exist. No portion of this material may be reproduced, in any form or by any means, without permission in writing from the publisher.

4–65. Draw the shear and moment diagrams for each of the three members of the frame. Assume the frame is pin connected at A, C, and D and there is a fixed joint at B.

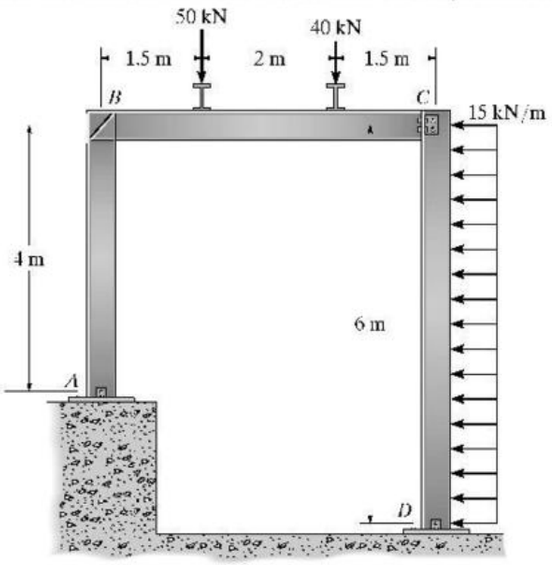

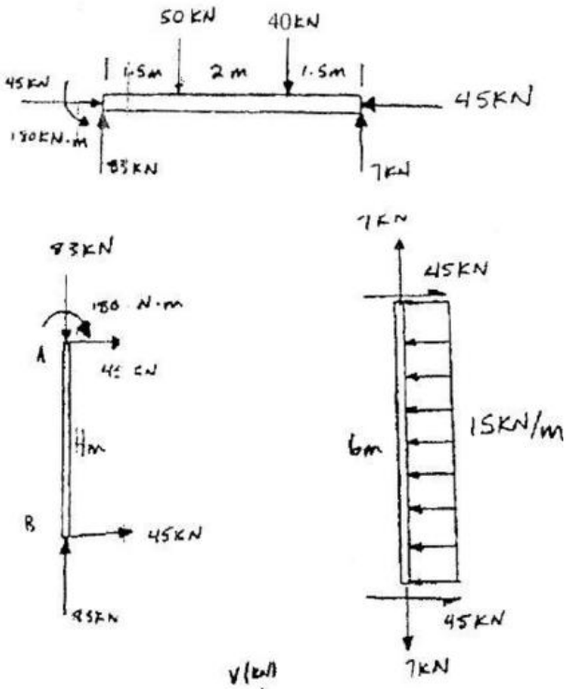

4–66. Draw the shear and moment diagrams for each member of the frame. The joints at A, B, and C are pin connected.

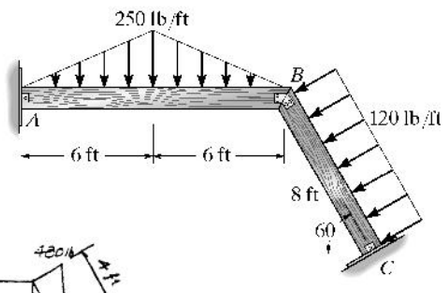

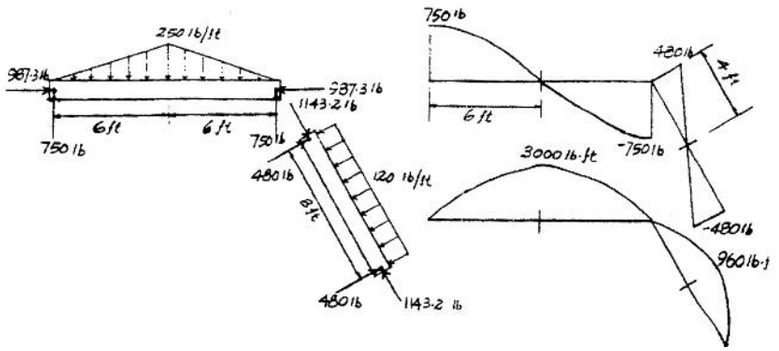

www.e-kitabi.com

c04.qxd 6/26/08 4:13 PM Page 122

© 2009 by R.C. Hibbeler. Published by Pearson Prentice Hall, Pearson Education, Inc., Upper Saddle River, NJ. All rights reserved. This material is protected under all copyright laws as they currently exist. No portion of this material may be reproduced, in any form or by any means, without permission in writing from the publisher.

4–67. Draw the moment diagrams for the beam using the method of superposition. Consider the beam to be simply supported. Assume A is a pin and B is a roller.

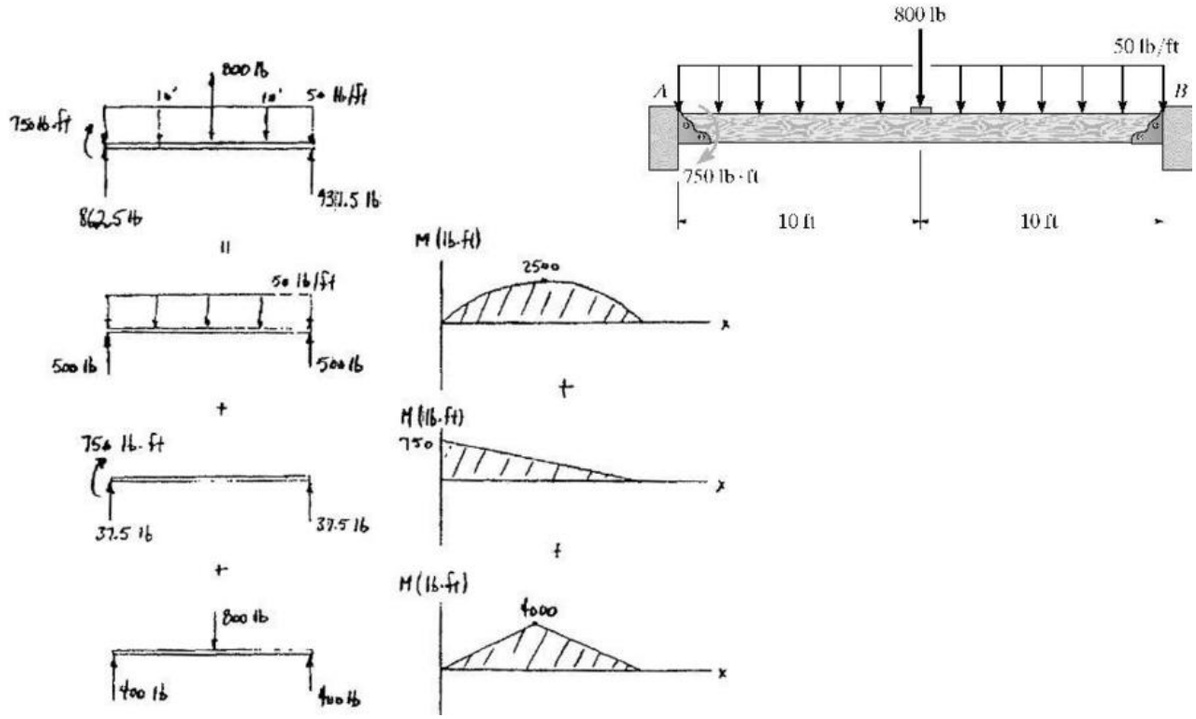

***4–68.** Solve Prob. 4–67 by considering the beam to be cantilevered from the support at A.

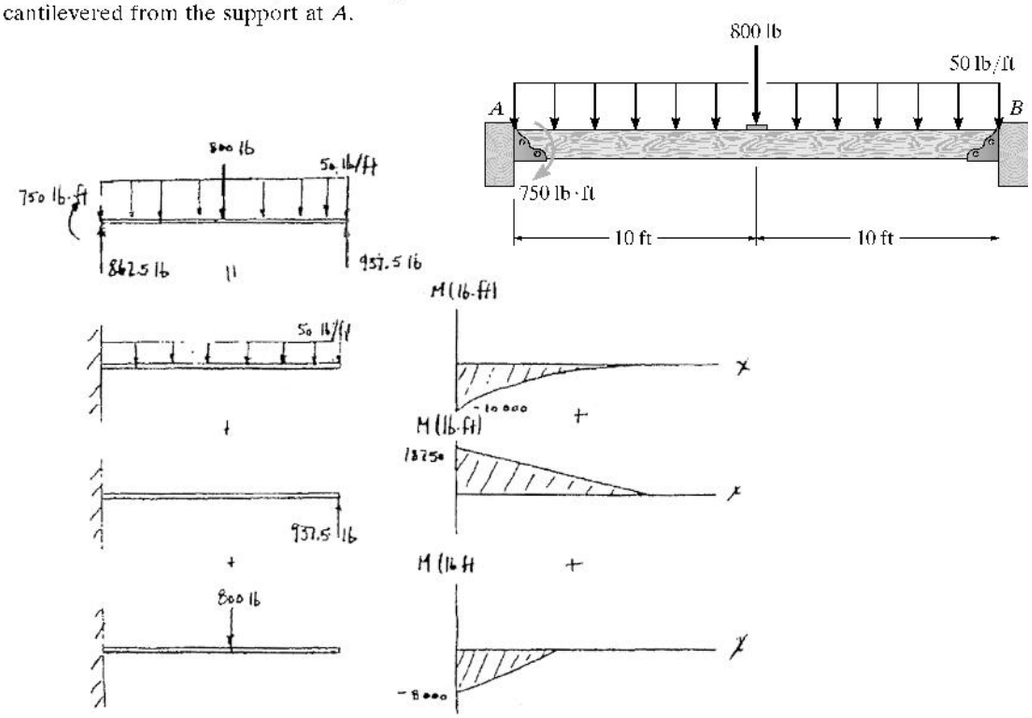

www.e-kitabi.com

c04.qxd 6/26/08 4:13 PM Page 123

© 2009 by R.C. Hibbeler. Published by Pearson Prentice Hall, Pearson Education, Inc., Upper Saddle River, NJ. All rights reserved. This material is protected under all copyright laws as they currently exist. No portion of this material may be reproduced, in any form or by any means, without permission in writing from the publisher.

4–69. Draw the moment diagrams for the beam using the method of superposition. Consider the beam to be cantilevered from the pin at A.

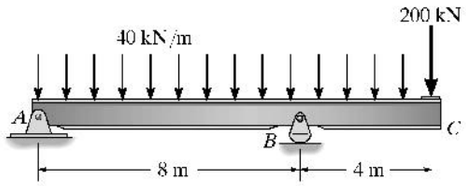

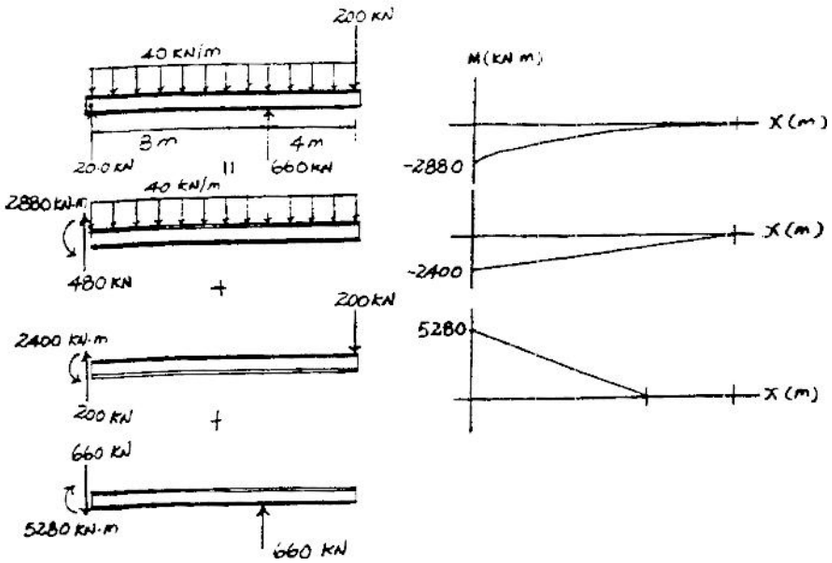

4–70. Draw the moment diagrams for the beam using the method of superposition.

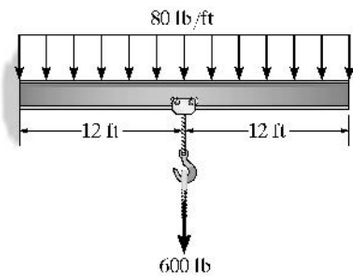

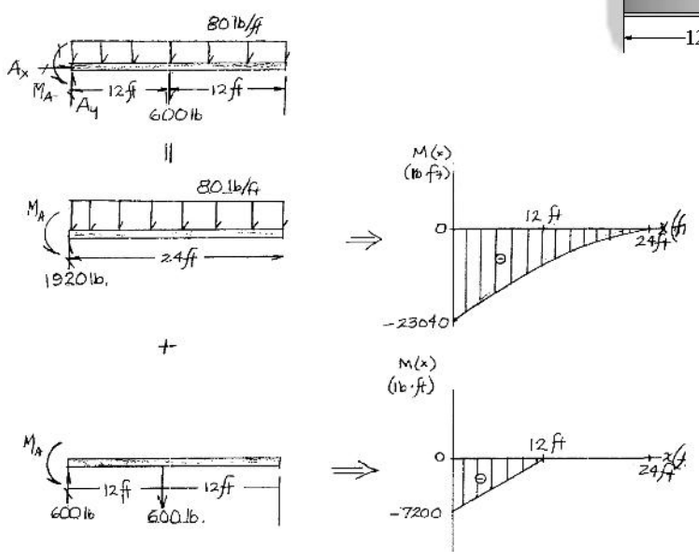

www.e-kitabi.com

c04.qxd 6/26/08 4:13 PM Page 124

© 2009 by R.C. Hibbeler. Published by Pearson Prentice Hall, Pearson Education, Inc., Upper Saddle River, NJ. All rights reserved. This material is protected under all copyright laws as they currently exist. No portion of this material may be reproduced, in any form or by any means, without permission in writing from the publisher.

4–71. Draw the moment diagrams for the beam using the method of superposition. Consider the beam to be cantilevered from the pin at A.

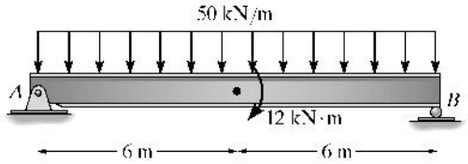

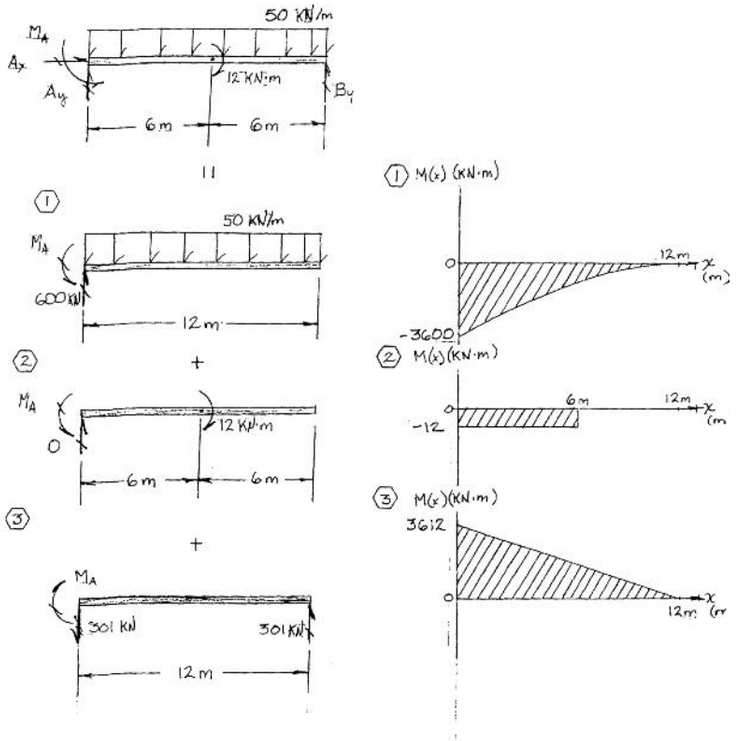

$+\Sigma M_A = 0;$

$$-600\ \text{kN}\ (6\ \text{m}) + B_y(12\ \text{m}) - 12\ \text{kN}\cdot\text{m} = 0$$

$$B_y = 301\ \text{kN}$$

www.e-kitabi.com

c04.qxd 6/26/08 4:13 PM Page 125

© 2009 by R.C. Hibbeler. Published by Pearson Prentice Hall, Pearson Education, Inc., Upper Saddle River, NJ. All rights reserved. This material is protected under all copyright laws as they currently exist. No portion of this material may be reproduced, in any form or by any means, without permission in writing from the publisher.

4–1P. The balcony located on the third floor of a motel is shown in the photo. It is constructed using a 4-in.-thick concrete (plain stone) slab which rests on the four simply supported floor beams, two cantilevered side girders AB and HG, and the front and rear girders. The idealized framing plan with average dimensions is shown in the adjacent figure. According to local code, the balcony live load is 45 psf. Draw the shear and moment diagrams for the front girder BG and a side girder AB. Assume the front girder is a channel that has a weight of 25 lb/ft and the side girders are wide flange sections that have a weight of 45 lb/ft. Neglect the weight of the floor beams and front railing. For this solution treat each of the five slabs as two-way slabs.

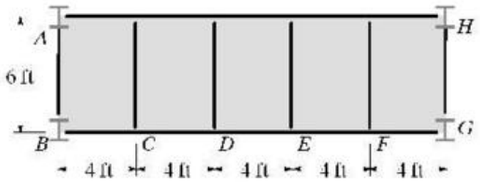

Dead load = (4 in.)(12 lb/ft^2 · in.) = 48 psf
Live load = 45 psf
Total load = 93 psf

$$\frac{L_2}{L_1} = \frac{6}{4} = 1.5 < 2 \qquad \text{Two-way slab}$$

Floor beam load

$$+\uparrow \Sigma F_y = 0; \quad 2R - 372(2) - 2\left(\frac{1}{2}\right)(372)(2) = 0$$

$$R = 744 \text{ lb}$$

Front girder

$$+\uparrow \Sigma F_y = 0; \quad 2R' - 4(744) - 5\left(\frac{1}{2}\right)(25 + 211)(4) = 0$$

$$R' = 2668 \text{ lb}$$

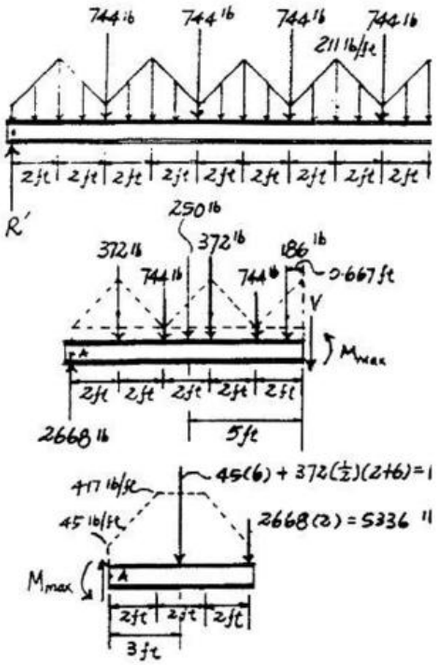

Maximum moment is at center of girder

$$\zeta + \Sigma M_A = 0;$$
$$M + 186(0.667) + 744(2) + 744(6) + 372(4) + 372(8) + 250(5) - 2668(10) = 0$$
$$M = 14\,890 \text{ lb} \cdot \text{ft} = 14.9 \text{ k} \cdot \text{ft} \qquad \text{Ans}$$

Side girder
Maximum moment at support.

$$\zeta + \Sigma M_A = 0; \quad M - 1758(3) - 5336(6) = 0$$
$$M = 37\,290 \text{ lb} \cdot \text{ft} = 37.3 \text{ k} \cdot \text{ft} \qquad \text{Ans}$$

Roof load on intermediate joist is $(102 \text{ lb/ft}^3)\left(\frac{4}{12} \text{ ft}\right)(1.5 \text{ ft}) = 51 \text{ lb/ft}$

$$R = \frac{1}{2}[1020 + 135] = 577.5 \text{ lb}$$

The loading on the girder

$$R_C = 577.5 + 190 + 230 = 997.5 \text{ lb}$$
$$R_D = 577.5 + 250 + 290 = 1117.5 \text{ lb}$$
$$R_E = 577.5 + 310 + 350 = 1237.5 \text{ lb}$$
$$R_F = 577.5 + 370 + 410 = 1357.5 \text{ lb}$$

www.e-kitabi.com

c04.qxd 6/26/08 4:13 PM Page 126

© 2009 by R.C. Hibbeler. Published by Pearson Prentice Hall, Pearson Education, Inc., Upper Saddle River, NJ. All rights reserved. This material is protected under all copyright laws as they currently exist. No portion of this material may be reproduced, in any form or by any means, without permission in writing from the publisher.

4–2P. The canopy shown in the photo provides shelter for the entrance of a building. Consider all members to be simply supported. The bar joists at *C*, *D*, *E*, *F* each have a weight of 135 lb and are 20 ft long. The roof is 4 in. thick and is to be plain lightweight concrete having a density of 102 lb/ft^3. Live load caused by drifting snow is assumed to be trapezoidal, with 60 psf at the right (against the wall) and 20 psf at the left (overhang). Assume the concrete slab is simply supported between the joists. Draw the shear and moment diagrams for the side girder *AB*. Neglect its weight.

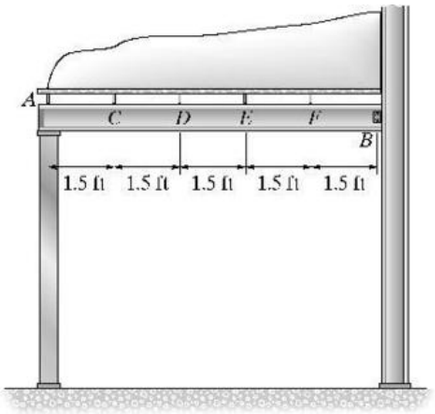

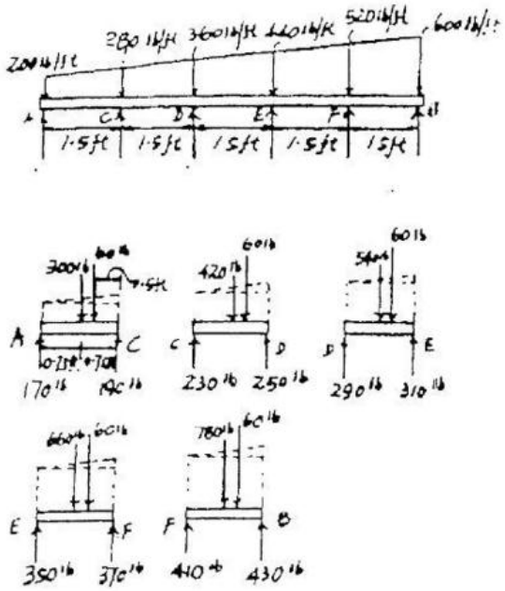

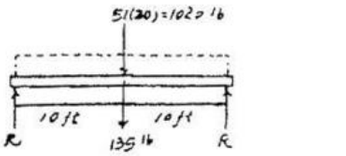

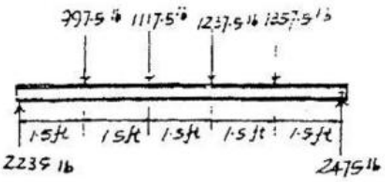

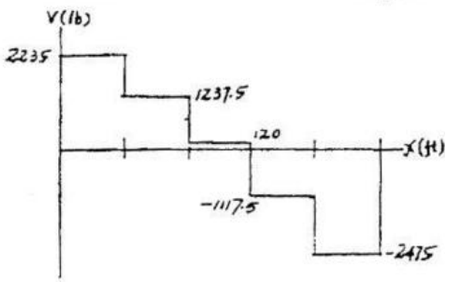

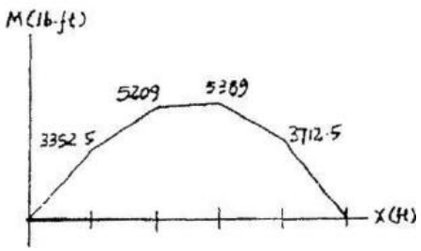

Roof load on intermediate joist is $(102 \text{ lb/ft}^3)\left(\frac{4}{12} \text{ ft}\right)(1.5 \text{ ft}) = 51 \text{ lb/ft}$

$$R = \frac{1}{2}[1020 + 135] = 577.5 \text{ lb}$$

The loading on the girder

$$R_C = 577.5 + 190 + 230 = 997.5 \text{ lb}$$
$$R_D = 577.5 + 250 + 290 = 1117.5 \text{ lb}$$
$$R_E = 577.5 + 310 + 350 = 1237.5 \text{ lb}$$
$$R_F = 577.5 + 370 + 410 = 1357.5 \text{ lb}$$

www.e-kitabi.com

c04.qxd 6/26/08 4:13 PM Page 127

© 2009 by R.C. Hibbeler. Published by Pearson Prentice Hall, Pearson Education, Inc., Upper Saddle River, NJ. All rights reserved. This material is protected under all copyright laws as they currently exist. No portion of this material may be reproduced, in any form or by any means, without permission in writing from the publisher.

4–3P. The idealized framing plan for a floor system located in the lobby of an office building is shown in the figure. The floor is made using 4-in.-thick reinforced stone concrete. If the walls of the elevator shaft are made from 4-in.-thick lightweight solid concrete masonry, having a height of 10 ft, determine the maximum moment in beam *AB*. Neglect the weight of the members.

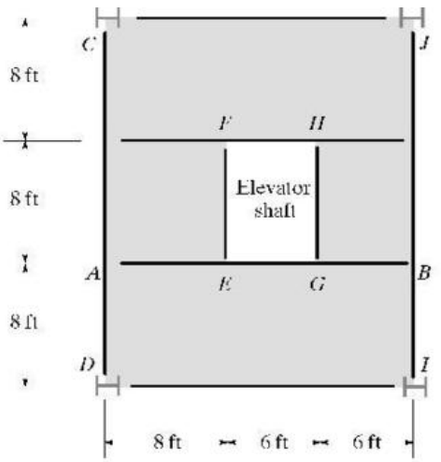

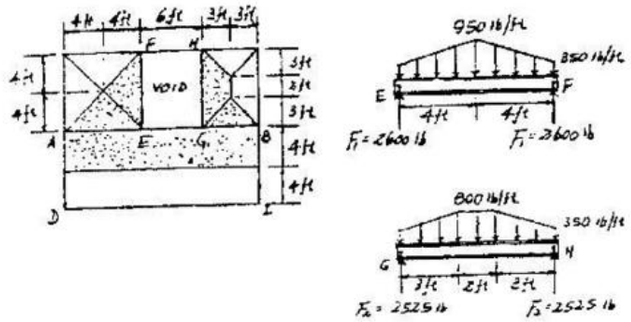

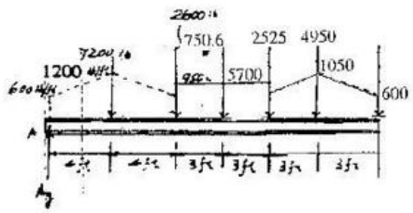

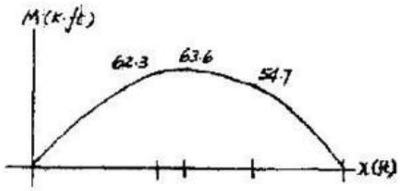

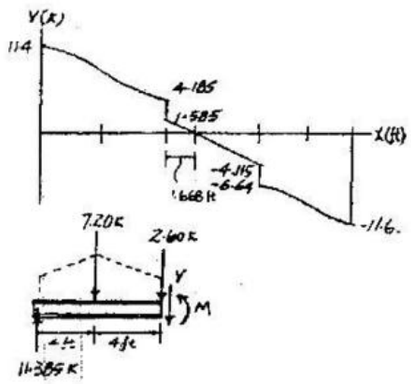

Floor loading:

Reinforced concrete stone slab = $(150\ \text{lb/ft}^3)\left(\frac{4}{12}\ \text{ft}\right) = 50$ psf
Elevator lobby live load = 100 psf
Total loading = 150 psf

Concrete block wall:

$\frac{4}{12}(105)(10) = 350$ lb/ft

From slab *ADIB*:

$w = (4)(150) = 600$ lb/ft

Beam *EF*:

$F_1 = \frac{1}{2}(350)(8) + \left(\frac{1}{2}\right)(600)(8) = 2600$ lb

Beam *HG*:

$F_2 = \frac{1}{2}(350)(8) + \left(\frac{1}{2}\right)450(2) + \left(\frac{1}{2}\right)(450)(3) = 2525$ lb

Equilibrium for entire beam *AB*:

$\zeta + \Sigma M_A = 0$: $B_y(20) - 7200(4) - 2600(8) - 5700(11) - 2525(14) - 4950(17) = 0$
$B_y = 11\,590$ lb $= 11.59$ k

$+\uparrow \Sigma F_y = 0$: $A_y + 11\,590 - 7200 - 2600 - 5700 - 2525 - 4950 = 0$
$A_y = 11\,385$ lb $= 11.385$ k

For Beam segment:

$\zeta + \Sigma M = 0$: $M + 7.20(4) - 11.385(8) = 0$
$M_{max} = 63.6$ k · ft

www.e-kitabi.com

c05.qxd 6/24/08 3:25 PM Page 129

© 2009 by R.C. Hibbeler. Published by Pearson Prentice Hall, Pearson Education, Inc., Upper Saddle River, NJ. All rights reserved. This material is protected under all copyright laws as they currently exist. No portion of this material may be reproduced, in any form or by any means, without permission in writing from the publisher.

5–1. The cable segments support the loading shown. Determine the distance y_C from the force at C to point D. Set $P = 4$ k.

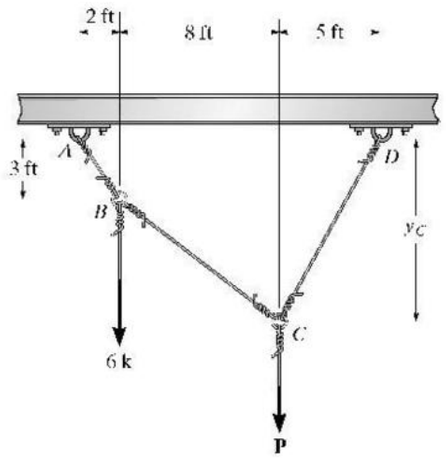

$\circlearrowleft +\Sigma M_D = 0;\quad -T_{AB}\cos 33.69°(13) - T_{AB}\sin 33.69°(3) + 6(13) + 4(5) = 0$

$T_{AB} = 7.8521$ k

$+\uparrow \Sigma F_y = 0;\quad -4 - 6 + 7.8521\cos 33.69° + D_y = 0$

$D_y = 3.4667$ k

$\stackrel{+}{\rightarrow} \Sigma F_x = 0;\quad D_x - 7.8521\sin 33.69° = 0$

$D_x = 4.3556$ k

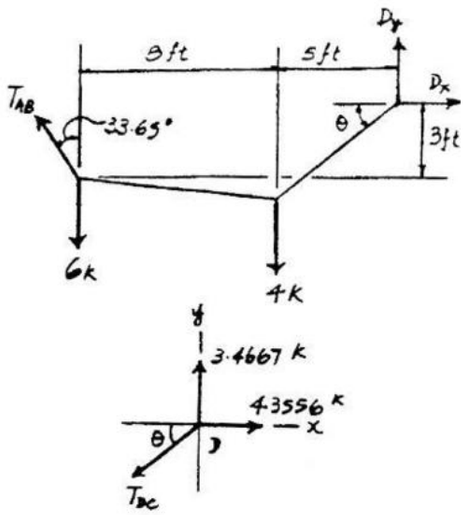

Joint D :

$\stackrel{+}{\rightarrow} \Sigma F_x = 0;\quad -T_{DC}\cos\theta + 4.3556 = 0$

$+\uparrow \Sigma F_y = 0;\quad 3.4667 - T_{DC}\sin\theta = 0$

Solving,

$\theta = 38.52°$

$T_{DC} = 5.567$ k

$y_C = 5\tan 38.52° = 3.98$ ft **Ans**

www.e-kitabi.com

c05.qxd 6/24/08 3:25 PM Page 130

© 2009 by R.C. Hibbeler. Published by Pearson Prentice Hall, Pearson Education, Inc., Upper Saddle River, NJ. All rights reserved. This material is protected under all copyright laws as they currently exist. No portion of this material may be reproduced, in any form or by any means, without permission in writing from the publisher.

5–2. The cable segments support the loading shown. Determine the magnitude of the vertical force **P** so that $y_C = 6$ ft.

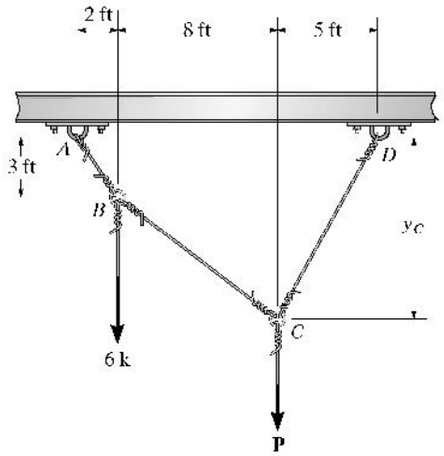

$\zeta + \Sigma M_A = 0;$ $T_{DC}\cos 39.81°(10) + T_{DC}\sin 39.81°(6) - 6(2) - P(10)$

$$11.523T_{DC} - 10P = 12 \qquad (1)$$

Joint C:

$+\nearrow \Sigma F_{y'} = 0;$ $T_{DC}\cos 19.25° - P\cos 20.55° = 0 \qquad (2)$

Solving Eqs. (1) and (2) yields:

$P = 8.40$ k **Ans**

$T_{DC} = 8.321$ k

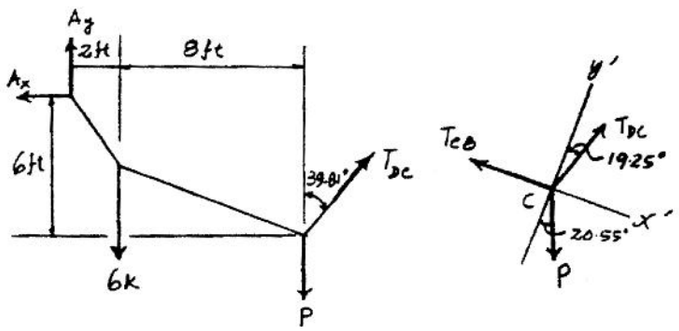

www.e-kitabi.com

c05.qxd 6/24/08 3:25 PM Page 131

© 2009 by R.C. Hibbeler. Published by Pearson Prentice Hall, Pearson Education, Inc., Upper Saddle River, NJ. All rights reserved. This material is protected under all copyright laws as they currently exist. No portion of this material may be reproduced, in any form or by any means, without permission in writing from the publisher.

5–3. Determine the tension in each segment of the cable and the cable's total length. Set $P = 80$ lb.

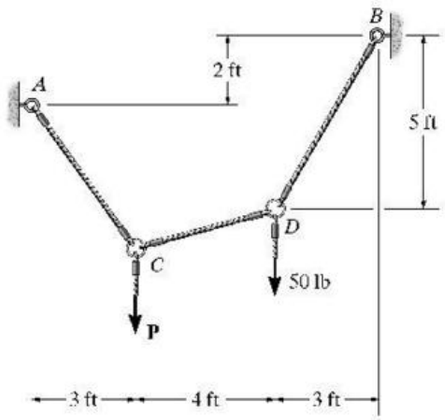

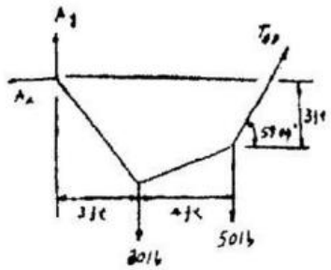

(a)

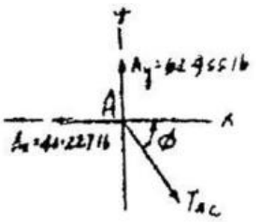

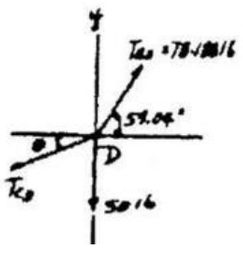

From FBD (a)

$\left(+\Sigma M_A = 0;\right.$ $T_{BD}\cos 59.04°(3) + T_{BD}\sin 59.04°(7) - 50(7) - 80(3) = 0$

$T_{BD} = 78.188 \text{ lb} = 78.2 \text{ lb}$ **Ans**

$\overset{+}{\rightarrow}\Sigma F_x = 0;$ $78.188\cos 59.04° - A_x = 0$ $A_x = 40.227$ lb

$+\uparrow \Sigma F_y = 0;$ $A_y + 78.188\sin 59.04° - 80 - 50 = 0$ $A_y = 62.955$ lb

Joint A :

$\overset{+}{\rightarrow}\Sigma F_x = 0;$ $T_{AC}\cos\phi - 40.227 = 0$ (1)

$+\uparrow \Sigma F_y = 0;$ $-T_{AC}\sin\phi + 62.955 = 0$ (2)

Solving Eqs. (1) and (2) yields :

$\phi = 57.42°$

$T_{AC} = 74.7$ lb **Ans**

Joint D :

$\overset{+}{\rightarrow}\Sigma F_x = 0;$ $78.188\cos 59.04° - T_{CD}\cos\theta = 0$ (3)

$+\uparrow \Sigma F_y = 0;$ $78.188\sin 59.04° - T_{CD}\sin\theta - 50 = 0$ (4)

Solving Eqs. (3) and (4) yields :

$\theta = 22.96°$

$T_{CD} = 43.7$ lb **Ans**

Total length of the cable : $L = \dfrac{5}{\sin 59.04°} + \dfrac{4}{\cos 22.96°} + \dfrac{3}{\cos 57.42°} = 15.7$ ft

www.e-kitabi.com

© 2009 by R.C. Hibbeler. Published by Pearson Prentice Hall, Pearson Education, Inc., Upper Saddle River, NJ. All rights reserved. This material is protected under all copyright laws as they currently exist. No portion of this material may be reproduced, in any form or by any means, without permission in writing from the publisher.

***5–4.** If each cable segment can support a maximum tension of 75 lb, determine the largest load P that can be applied.

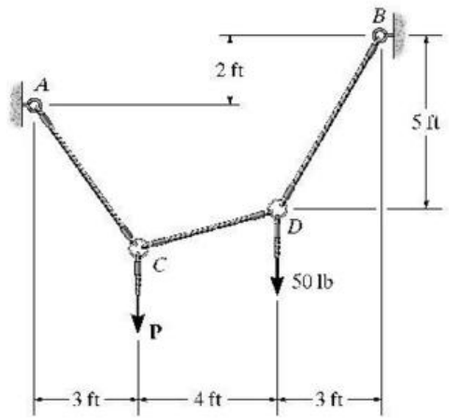

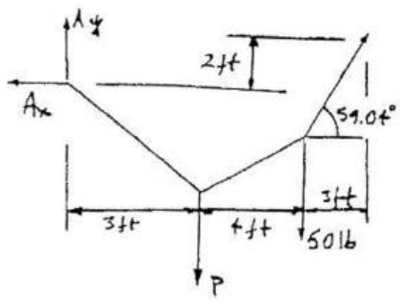

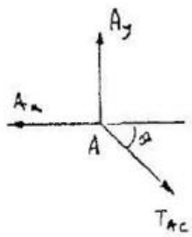

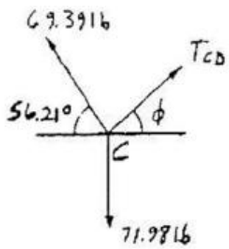

$\zeta + \Sigma M_A = 0;$ $T_{BD}(\cos 59.04°)(3) + T_{BD}(\sin 59.04°)(7) - 50(7) - P(3) = 0$

$T_{BD} = 0.39756P + 46.383$

$\rightarrow \Sigma F_x = 0;$ $-A_x + T_{BD}\cos 59.04° = 0$

$+\uparrow \Sigma F_y = 0;$ $A_y - P - 50 + T_{BD}\sin 59.04° = 0$

Assume maximum tension is in cable BD.

$T_{BD} = 75$ lb

$P = 71.98$ lb

$A_x = 38.59$ lb

$A_y = 57.670$ lb

Pin A:

$T_{AC} = \sqrt{(38.59)^2 + (57.670)^2} = 69.39 \text{ lb} < 75 \text{ lb}$ OK

$\theta = \tan^{-1}\left(\frac{57.670}{38.59}\right) = 56.21°$

Joint C:

$\rightarrow \Sigma F_x = 0;$ $T_{CD}\cos\phi - 69.39\cos 56.21° = 0$

$+\uparrow \Sigma F_y = 0;$ $T_{CD}\sin\phi + 69.39\sin 56.21° - 71.98 = 0$

$T_{CD} = 41.2 \text{ lb} < 75 \text{ lb}$ OK

$\phi = 20.3°$

Thus, $P = 72.0$ lb Ans

www.e-kitabi.com

c05.qxd 6/24/08 3:25 PM Page 133

© 2009 by R.C. Hibbeler. Published by Pearson Prentice Hall, Pearson Education, Inc., Upper Saddle River, NJ. All rights reserved. This material is protected under all copyright laws as they currently exist. No portion of this material may be reproduced, in any form or by any means, without permission in writing from the publisher.

5–5. The cable supports the three loads shown. Determine the sags y_B and y_D of points B and D. Take $P_1 = 4$ kN, $P_2 = 2.5$ kN.

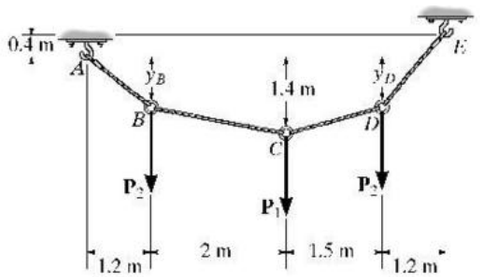

At B:

$$\overset{+}{\rightarrow}\Sigma F_x = 0; \qquad \frac{2}{\sqrt{(1.4-y_B)^2+4}}T_{BC} - \frac{1.2}{\sqrt{y_B^2+1.44}}T_{AB} = 0$$

$$+\uparrow \Sigma F_y = 0; \qquad -\frac{1.4-y_B}{\sqrt{(1.4-y_B)^2+4}}T_{BC} + \frac{y_B}{\sqrt{y_B^2+1.44}}T_{AB} - 2.5 = 0$$

$$\frac{3.2y_B - 1.68}{\sqrt{(1.4-y_B)^2+4}}T_{BC} = 3 \qquad (1)$$

At C:

$$\overset{+}{\rightarrow}\Sigma F_x = 0; \qquad \frac{1.5}{\sqrt{(1.4-y_D)^2+2.25}}T_{CD} - \frac{2}{\sqrt{(1.4-y_B)^2+4}}T_{BC} = 0$$

$$+\uparrow \Sigma F_y = 0; \qquad \frac{1.4-y_D}{\sqrt{(1.4-y_D)^2+2.25}}T_{CD} + \frac{1.4-y_B}{\sqrt{(1.4-y_B)^2+4}}T_{BC} - 4 = 0$$

$$\frac{-2y_D + 4.9 - 1.5y_B}{\sqrt{(1.4-y_B)^2+4}}T_{BC} = 6 \qquad (2)$$

$$\frac{-2y_D + 4.9 - 1.5y_B}{\sqrt{(1.4-y_D)^2+2.25}}T_{CD} = 8 \qquad (3)$$

At D:

$$\overset{+}{\rightarrow}\Sigma F_x = 0; \qquad \frac{1.2}{\sqrt{(0.4+y_D)^2+1.44}}T_{DE} - \frac{1.5}{\sqrt{(1.4-y_D)^2+2.25}}T_{CD} = 0$$

$$+\uparrow \Sigma F_y = 0; \qquad \frac{0.4+y_D}{\sqrt{(0.4+y_D)^2+1.44}}T_{DE} - \frac{1.4-y_D}{\sqrt{(1.4-y_D)^2+2.25}}T_{CD} - 2.5 = 0$$

$$\frac{-1.08 + 2.7y_D}{\sqrt{(1.4-y_D)^2+2.25}}T_{CD} = 3 \qquad (4)$$

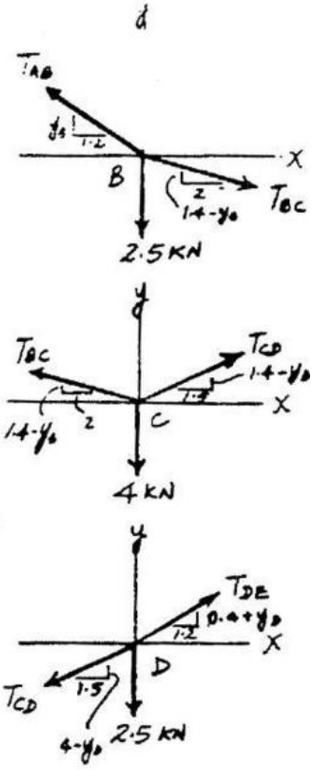

Combining Eqs. (1) and (2)

$$7.9y_B + 2y_D = 8.26$$

Combining Eqs. (3) and (4)

$$4.5y_B + 27.6y_D = 23.34$$

$y_B = 0.867$ m **Ans**

$y_D = 0.704$ m **Ans**

www.e-kitabi.com

c05.qxd 6/24/08 3:25 PM Page 134

© 2009 by R.C. Hibbeler. Published by Pearson Prentice Hall, Pearson Education, Inc., Upper Saddle River, NJ. All rights reserved. This material is protected under all copyright laws as they currently exist. No portion of this material may be reproduced, in any form or by any means, without permission in writing from the publisher.

5–6. The cable supports the three loads shown. Determine the magnitude of $\mathbf{P}_1$ if $P_2 = 3\,\text{kN}$ and $y_B = 0.8\,\text{m}$. Also find the sag y_D.

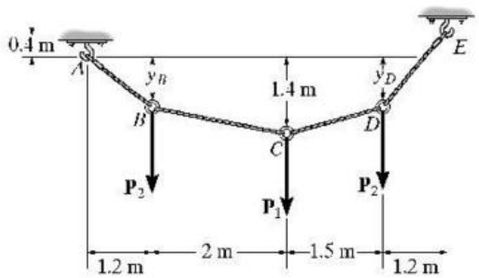

At B:

$$\overset{+}{\rightarrow}\Sigma F_x = 0; \qquad \frac{2}{\sqrt{4.36}}T_{BC} - \frac{1.2}{\sqrt{2.08}}T_{AB} = 0$$

$$+\uparrow \Sigma F_y = 0; \qquad -\frac{0.6}{\sqrt{4.36}}T_{BC} + \frac{0.8}{\sqrt{2.08}}T_{AB} - 3 = 0$$

$$T_{AB} = 9.833\,\text{kN}$$

$$T_{BC} = 8.542\,\text{kN}$$

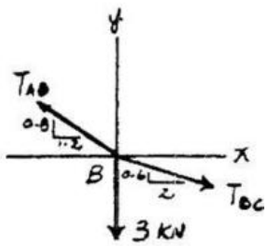

At C:

$$\overset{+}{\rightarrow}\Sigma F_x = 0; \qquad -\frac{2}{\sqrt{4.36}}(8.542) + \frac{1.5}{\sqrt{(1.4-y_D)^2 + 2.25}}T_{CD} = 0 \qquad (1)$$

$$+\uparrow \Sigma F_y = 0; \qquad \frac{0.6}{\sqrt{4.36}}(8.542) + \frac{1.4 - y_D}{\sqrt{(1.4-y_D)^2 + 2.25}}T_{CD} - P_1 = 0 \qquad (2)$$

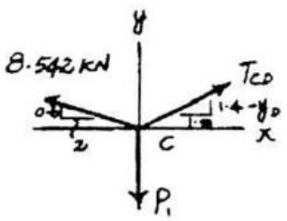

At D:

$$\overset{+}{\rightarrow}\Sigma F_x = 0; \qquad \frac{1.2}{\sqrt{(0.4+y_D)^2 + 1.44}}T_{DE} - \frac{1.5}{\sqrt{(1.4-y_D)^2 + 2.25}}T_{CD} = 0$$

$$+\uparrow \Sigma F_y = 0; \qquad \frac{0.4 + y_D}{\sqrt{(0.4+y_D)^2 + 1.44}}T_{DE} - \frac{1.4 - y_D}{\sqrt{(1.4-y_D)^2 + 2.25}}T_{CD} - 3 = 0$$

$$T_{CD} = \frac{3.6\sqrt{2.25 + (1.4 - y_D)^2}}{2.7y_D - 1.08}$$

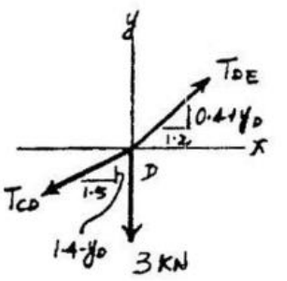

Substitute into Eq. (1):

$$y_D = 0.644\,\text{m} \qquad \textbf{Ans}$$

$$T_{CD} = 9.16\,\text{kN}$$

From Eq. (2):

$$P_1 = 6.58\,\text{kN} \qquad \textbf{Ans}$$

www.e-kitabi.com

© 2009 by R.C. Hibbeler. Published by Pearson Prentice Hall, Pearson Education, Inc., Upper Saddle River, NJ. All rights reserved. This material is protected under all copyright laws as they currently exist. No portion of this material may be reproduced, in any form or by any means, without permission in writing from the publisher.

5–7. Determine the tension in each segment of the cable and the cable's total length.

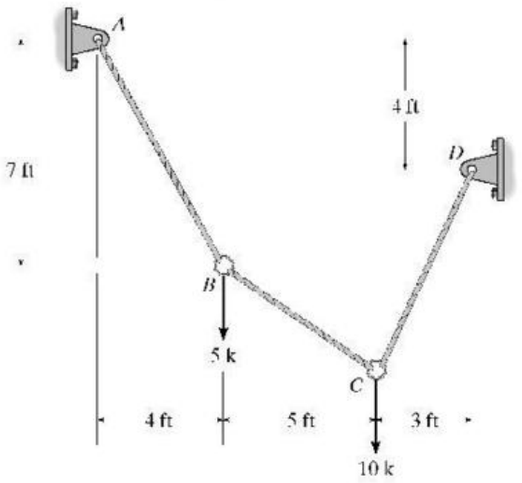

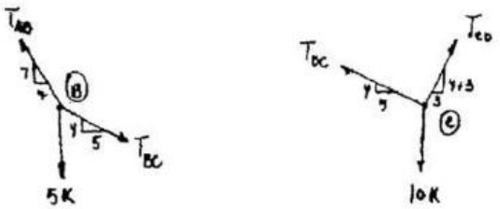

At B:

$$\overset{+}{\rightarrow}\Sigma F_x = 0: \quad \frac{5}{\sqrt{y^2+25}}T_{BC} - \frac{4}{\sqrt{65}}T_{AB} = 0$$

$$+\uparrow \Sigma F_y = 0: \quad -\frac{y}{\sqrt{y^2+25}}T_{BC} + \frac{7}{\sqrt{65}}T_{AB} - 5 = 0$$

$$\frac{35}{\sqrt{y^2+25}}T_{BC} - \frac{4y}{\sqrt{y^2+25}}T_{BC} - 20 = 0 \quad (1)$$

At C:

$$\overset{+}{\rightarrow}\Sigma F_x = 0: \quad \frac{3}{\sqrt{(y+3)^2+9}}T_{CD} - \frac{5}{\sqrt{y^2+25}}T_{BC} = 0$$

$$+\uparrow \Sigma F_y = 0: \quad \frac{y+3}{\sqrt{(y+3)^2+9}}T_{CD} + \frac{y}{\sqrt{y^2+25}}T_{BC} - 10 = 0$$

$$\frac{3y}{\sqrt{y^2+25}}T_{BC} + \frac{5(y+3)}{\sqrt{y^2+25}}T_{BC} - 30 = 0 \quad (2)$$

Solving Eqs. (1) and (2):

$$\frac{35-4y}{15+8y} = \frac{2}{3}$$

$$y = 2.679 \text{ ft}$$

$$T_{BC} = 4.67 \text{ k} \quad \textbf{Ans}$$

Thus,

$$T_{AB} = 8.30 \text{ k} \quad \textbf{Ans}$$

$$T_{CD} = 8.81 \text{ k} \quad \textbf{Ans}$$

Cable's total length $= \sqrt{65} + \sqrt{y^2+25} + \sqrt{(y+3)^2+9} = 20.2$ ft **Ans**

***5–8.** Cable $ABCD$ supports the loading shown. Determine the maximum tension in the cable and the sag of point B.

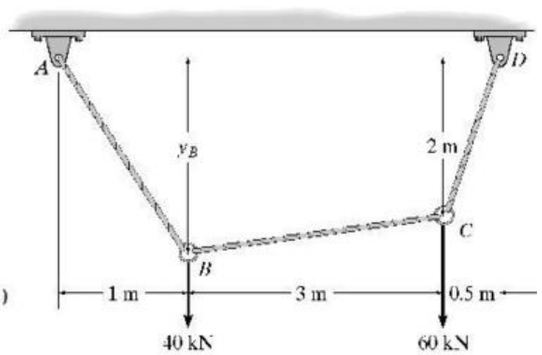

At B:

$$\overset{+}{\rightarrow}\Sigma F_x = 0: \quad \frac{3}{\sqrt{(y_B-2)^2+9}}T_{BC} - \frac{1}{\sqrt{y_B^2+1}}T_{AB} = 0$$

$$+\uparrow \Sigma F_y = 0: \quad \frac{y_B-2}{\sqrt{(y_B-2)^2+9}}T_{BC} + \frac{y_B}{\sqrt{y_B^2+1}}T_{AB} - 40 = 0$$

$$\frac{3y_B}{\sqrt{(y_B-2)^2+9}}T_{BC} + \frac{y_B-2}{\sqrt{(y_B-2)^2+9}}T_{BC} - 40 = 0 \quad (1)$$

At C:

$$\overset{+}{\rightarrow}\Sigma F_x = 0: \quad \frac{0.5}{\sqrt{4.25}}T_{CD} - \frac{3}{\sqrt{(y_B-2)^2+9}}T_{BC} = 0$$

$$+\uparrow \Sigma F_y = 0: \quad \frac{2}{\sqrt{4.25}}T_{CD} - \frac{y_B-2}{\sqrt{(y_B-2)^2+9}}T_{BC} - 60 = 0$$

$$\frac{12}{\sqrt{(y_B-2)^2+9}}T_{BC} - \frac{y_B-2}{\sqrt{(y_B-2)^2+9}}T_{BC} - 60 = 0 \quad (2)$$

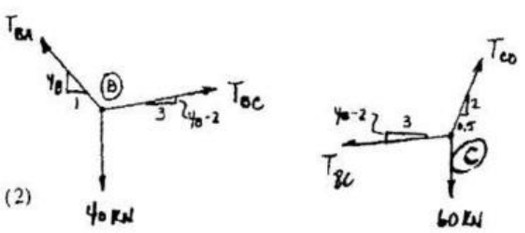

Solving Eqs. (1) and (2):

$$\frac{4y_B-2}{14-y_B} = \frac{2}{3}$$

$$y_B = 2.429 \text{ m} = 2.43 \text{ m} \quad \textbf{Ans}$$

$$T_{BC} = 15.7 \text{ kN}$$

Thus,

$$T_{AB} = 40.9 \text{ kN}$$

$$T_{CD} = 64.1 \text{ kN} \quad \textbf{Ans}$$

Maximum tension is $T_{max} = 64.1$ kN **Ans**

www.e-kitabi.com

c05.qxd 6/24/08 3:25 PM Page 136

© 2009 by R.C. Hibbeler. Published by Pearson Prentice Hall, Pearson Education, Inc., Upper Saddle River, NJ. All rights reserved. This material is protected under all copyright laws as they currently exist. No portion of this material may be reproduced, in any form or by any means, without permission in writing from the publisher.

5–9. Determine the force P needed to hold the cable in the position shown, i.e., so segment BC remains horizontal. Also, compute the sag y_B and the maximum tension in the cable.

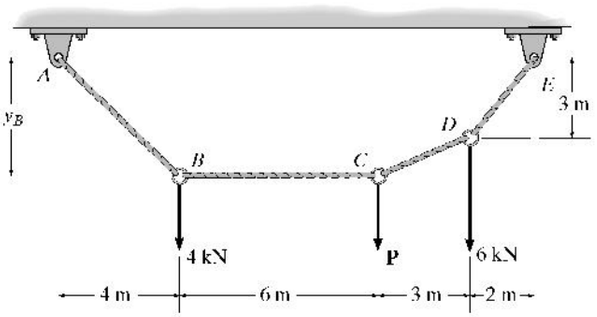

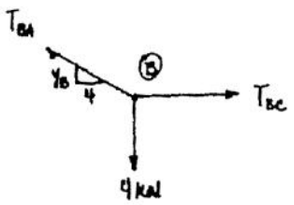

At B:

$$\overset{+}{\rightarrow}\Sigma F_x = 0; \qquad T_{BC} - \frac{4}{\sqrt{y_B^2 + 16}} T_{AB} = 0$$

$$+\uparrow \Sigma F_y = 0; \qquad \frac{y_B}{\sqrt{(y_B)^2 + 16}} T_{AB} - 4 = 0$$

$$y_B T_{BC} = 16 \qquad (1)$$

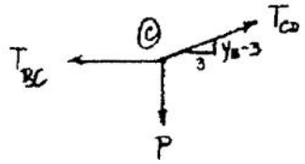

At C:

$$\overset{+}{\rightarrow}\Sigma F_x = 0; \qquad \frac{3}{\sqrt{(y_B - 3)^2 + 9}} T_{CD} - T_{BC} = 0$$

$$+\uparrow \Sigma F_y = 0; \qquad \frac{y_B - 3}{\sqrt{(y_B - 3)^2 + 9}} T_{CD} - P = 0$$

$$(y_B - 3) T_{BC} = 3P \qquad (2)$$

$$\frac{3}{\sqrt{(y_B - 3)^2 + 9}} T_{CD} = \frac{16}{y_B} \qquad (3)$$

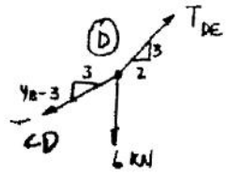

At D:

$$\overset{+}{\rightarrow}\Sigma F_x = 0; \qquad \frac{2}{\sqrt{13}} T_{DE} - \frac{3}{\sqrt{(y_B-3)^2 + 9}} T_{CD} = 0$$

$$+\uparrow \Sigma F_y = 0; \qquad \frac{3}{\sqrt{13}} T_{DE} - \frac{y_B - 3}{\sqrt{(y_B-3)^2 + 9}} T_{CD} - 6 = 0$$

$$\frac{15 - 2y_B}{\sqrt{(y_B-3)^2 + 9}} T_{CD} = 12 \qquad (4)$$

Solving Eqs. (1) and (2):

$$3y_B P - 16y_B + 48 = 0$$

Solving Eqs. (3) and (4):

$y_B = 3.53$ m **Ans**

$P = 0.800$ kN **Ans**

$T_{BC} = 4.5333$ kN

$T_{CD} = 4.603$ kN

$T_{DE} = 8.17$ kN **Ans**

www.e-kitabi.com

© 2009 by R.C. Hibbeler. Published by Pearson Prentice Hall, Pearson Education, Inc., Upper Saddle River, NJ. All rights reserved. This material is protected under all copyright laws as they currently exist. No portion of this material may be reproduced, in any form or by any means, without permission in writing from the publisher.

5–10. The cable supports the loading shown. Determine the distance x_B the force at point B acts from A. Set $P = 40$ lb.

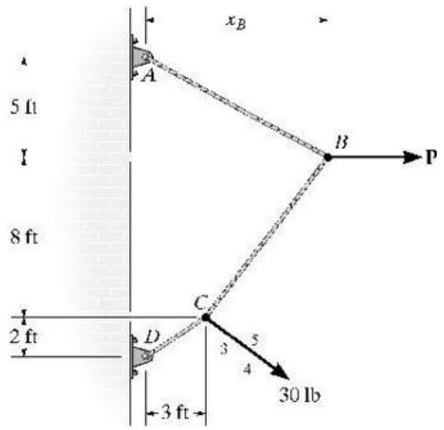

At B:

$$\overset{+}{\rightarrow}\Sigma F_x = 0; \quad 40 - \frac{x_B}{\sqrt{x_B^2 + 25}}T_{AB} - \frac{x_B - 3}{\sqrt{(x_B - 3)^2 + 64}}T_{BC} = 0$$

$$+\uparrow \Sigma F_y = 0; \quad \frac{5}{\sqrt{x_B^2 + 25}}T_{AB} - \frac{8}{\sqrt{(x_B - 3)^2 + 64}}T_{BC} = 0$$

$$\frac{13x_B - 15}{\sqrt{(x_B - 3)^2 + 64}}T_{BC} = 200 \qquad (1)$$

At C:

$$\overset{+}{\rightarrow}\Sigma F_x = 0; \quad \frac{4}{5}(30) + \frac{x_B - 3}{\sqrt{(x_B - 3)^2 + 64}}T_{BC} - \frac{3}{\sqrt{13}}T_{CD} = 0$$

$$+\uparrow \Sigma F_y = 0; \quad \frac{8}{\sqrt{(x_B - 3)^2 + 64}}T_{BC} - \frac{2}{\sqrt{13}}T_{CD} - \frac{3}{5}(30) = 0$$

$$\frac{30 - 2x_B}{\sqrt{(x_B - 3)^2 + 64}}T_{BC} = 102 \qquad (2)$$

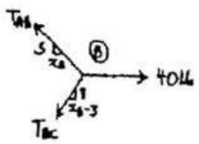

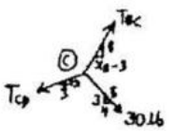

Solving Eqs. (1) & (2)

$$\frac{13x_B - 15}{30 - 2x_B} = \frac{200}{102}$$

$$x_B = 4.36 \text{ ft} \qquad \textbf{Ans}$$

5–11. The cable is subjected to a uniform loading of $w = 250$ lb/ft. Determine the maximum and minimum tension in the cable.

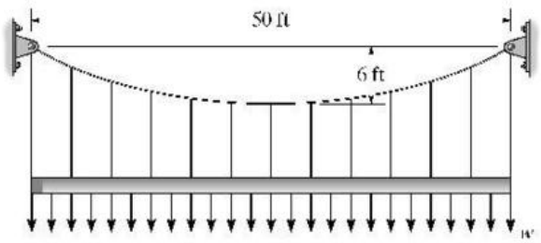

$$F_H = \frac{w_0 L^2}{8h} = \frac{250\,(50)^2}{8\,(6)} = 13\,021 \text{ lb}$$

$$\theta_{max} = \tan^{-1}\left(\frac{w_0 L}{2F_H}\right) = \tan^{-1}\left(\frac{250\,(50)}{2\,(13\,02k)}\right) = 25.64°$$

$$T_{max} = \frac{F_H}{\cos\theta_{max}} = \frac{13\,021}{\cos 25.64°} = 14.4 \text{ kip} \qquad \textbf{Ans}$$

The minimum tension occurs at $\theta = 0°$.

$$T_{min} = F_H = 13.0 \text{ kip} \qquad \textbf{Ans}$$

www.e-kitabi.com

c05.qxd 6/24/08 3:25 PM Page 138

© 2009 by R.C. Hibbeler. Published by Pearson Prentice Hall, Pearson Education, Inc., Upper Saddle River, NJ. All rights reserved. This material is protected under all copyright laws as they currently exist. No portion of this material may be reproduced, in any form or by any means, without permission in writing from the publisher.

***5–12.** Determine the maximum uniform loading w that the cable can support if it is capable of sustaining a maximum tension of 3000 lb before it will break.

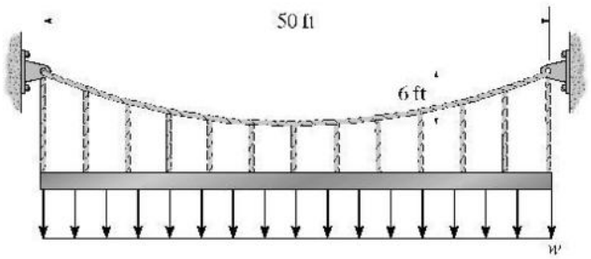

$$y = \frac{1}{F_H}\int\left(\int w\,dx\right)dx$$

$$y = \frac{1}{F_H}\left(\frac{wx^2}{2} + C_1x + C_2\right)$$

At $x = 0$, $y = 0$ and $\frac{dy}{dx} = 0$

$$C_1 = C_2 = 0$$

$$y = \frac{w}{2F_H}x^2$$

At $x = 25$ ft, $y = 6$ ft

$$F_H = 52.08\,w$$

$$\left.\frac{dy}{dx}\right|_{max} = \tan(\theta_{max}) = \left.\frac{w}{F_H}x\right|_{x\,=\,25\ ft}$$

$$\theta_{max} = \tan^{-1}(0.48) = 25.64°$$

$$T_{max} = \frac{F_H}{\cos(\theta_{max})} = 3000$$

$$F_H = 2705\ \text{lb}$$

$$w = 51.9\ \text{lb/ft} \qquad \textbf{Ans}$$

5–13. The cable is subjected to the uniform loading. Determine the equation $y = f(x)$ which defines the cable shape AB and the maximum tension in the cable.

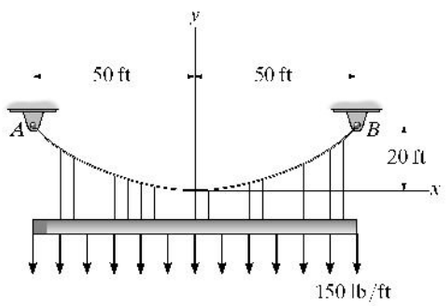

From Eq. 5–9

$$y = \frac{h}{L^2}x^2 = \frac{20}{(50)^2}x^2$$

$$y = 0.008x^2 \qquad \textbf{Ans}$$

From Eq. 5–11,

$$T_{max} = w_0 L\sqrt{1 + \left(\frac{L}{2h}\right)^2}$$

$$T_{max} = 150(50)\sqrt{1 + \left(\frac{50}{2(20)}\right)^2} = 12.0\ \text{kip} \qquad \textbf{Ans}$$

www.e-kitabi.com

c05.qxd 6/24/08 3:25 PM Page 139

© 2009 by R.C. Hibbeler. Published by Pearson Prentice Hall, Pearson Education, Inc., Upper Saddle River, NJ. All rights reserved. This material is protected under all copyright laws as they currently exist. No portion of this material may be reproduced, in any form or by any means, without permission in writing from the publisher.

5–14. The cable supports a girder which weighs 850 lb/ft. Determine the tension in the cable at points A, B, and C.

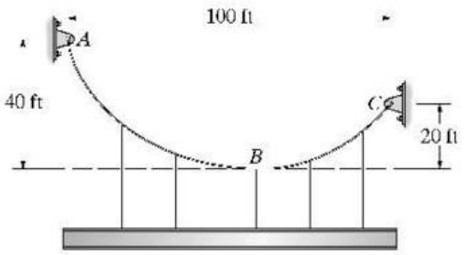

Setting $x = 0$ at the lowest point B,

$$y = \frac{w_0}{2F_H}x^2$$

$$y = \frac{1}{F_H}\int(\int w_0\,dx)dx$$

$$y = \frac{1}{F_H}(425x^2 + C_1x + C_2)$$

$$\frac{dy}{dx} = \frac{850}{F_H}x + \frac{C_1}{F_H}$$

At $x = 0$, $\frac{dy}{dx} = 0$ $C_1 = 0$

At $x = 0$, $y = 0$ $C_2 = 0$

$$y = \frac{425}{F_H}x^2$$

At $y = 20$ ft, $x = x'$

$$20 = \frac{425(x')^2}{F_H}$$

At $y = 40$ ft, $x = (100 - x')$

$$40 = \frac{425(100 - x')^2}{F_H}$$

$$2(x')^2 = (x')^2 - 200x' + 100^2$$

$$(x')^2 + 200x' - 100^2 = 0$$

$$x' = \frac{-200 + \sqrt{200^2 + 4(100)^2}}{2} = 41.42 \text{ ft}$$

$$F_H = 36\,459 \text{ lb}$$

At A,

$$\frac{dy}{dx} = \tan\theta_A = \left.\frac{2(425)x}{F_H}\right|_{x = -58.58\text{ ft}} = 1.366$$

$$\theta_A = 53.79°$$

$$T_A = \frac{F_H}{\cos\theta_A} = \frac{36\,459}{\cos 53.79°} = 61\,714 \text{ lb}$$

$$T_A = 61.7 \text{ kip} \qquad \textbf{Ans}$$

At B,

$$T_B = F_H = 36.5 \text{ kip} \qquad \textbf{Ans}$$

At C,

$$\frac{dy}{dx} = \tan\theta_C = \left.\frac{2(425)x}{F_H}\right|_{x = 41.42\text{ ft}} = 0.9657$$

$$\theta_C = 44.0°$$

$$T_C = \frac{F_H}{\cos\theta_C} = \frac{36\,459}{\cos 44.0°} = 50\,683 \text{ lb}$$

$$T_C = 50.7 \text{ kip} \qquad \textbf{Ans}$$

Also,

Applying Eq. 5–9 twice,

$$y = \frac{20}{L^2}x^2$$

and

$$y = \frac{40}{(100 - L)^2}x^2$$

Dividing one equation by the other and solving for L yeilds

$$L = \frac{100\sqrt{5}}{\sqrt{10} + \sqrt{5}} = 41.421 \text{ ft}$$

Then $F_H = T_B = \frac{850(41.421)^2}{2(20)} = 36.459 \text{ k} = 36.5 \text{ k}$ **Ans**

By Eq. 5–10,

$$T_A = \sqrt{(36.459)^2 + [850(100 - 41.421)]^2} = 61.7 \text{ k} \qquad \textbf{Ans}$$

$$T_C = \sqrt{(36.459)^2 + [850(41.421)]^2} = 50.7 \text{ k} \qquad \textbf{Ans}$$

www.e-kitabi.com

c05.qxd 6/24/08 3:25 PM Page 140

© 2009 by R.C. Hibbeler. Published by Pearson Prentice Hall, Pearson Education, Inc., Upper Saddle River, NJ. All rights reserved. This material is protected under all copyright laws as they currently exist. No portion of this material may be reproduced, in any form or by any means, without permission in writing from the publisher.

5–15. The cable supports the uniform load of $w_0 = 600$ lb/ft. Determine the tension in the cable at each support A and B.

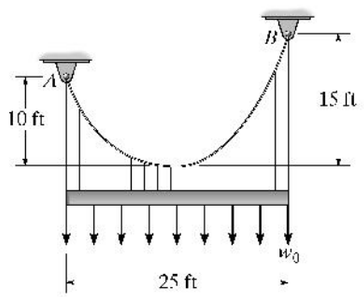

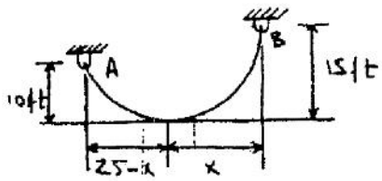

$$y = \frac{w_0}{2F_H}x^2$$

$$15 = \frac{600}{2F_H}x^2$$

$$10 = \frac{600}{2F_H}(25 - x)^2$$

$$\frac{600}{2(15)}x^2 = \frac{600}{2(10)}(25 - x)^2$$

$$x^2 = 1.5(625 - 50x + x^2)$$

$$0.5x^2 - 75x + 937.50 = 0$$

Choose root < 25 ft.

$$x = 13.76 \text{ ft}$$

$$F_H = \frac{w_0}{2y}x^2 = \frac{600}{2(15)}(13.76)^2 = 3788 \text{ lb}$$

At B:

$$y = \frac{w_0}{2F_H}x^2 = \frac{600}{2(3788)}x^2$$

$$\frac{dy}{dx} = \tan\theta_B = 0.15838\,x\Big|_{x = 13.76} = 2.180$$

$$\theta_B = 65.36°$$

$$T_B = \frac{F_H}{\cos\theta_B} = \frac{3788}{\cos 65.36°} = 9085 \text{ lb} = 9.09 \text{ kip} \quad \text{Ans}$$

At A:

$$y = \frac{w_0}{2F_H}x^2 = \frac{600}{2(3788)}x^2$$

$$\frac{dy}{dx} = \tan\theta_A = 0.15838\,x\Big|_{x = (25 - 13.76)} = 1.780$$

$$\theta_A = 60.67°$$

$$T_A = \frac{F_H}{\cos\theta_A} = \frac{3788}{\cos 60.67°} = 7734 \text{ lb} = 7.73 \text{ kip} \quad \text{Ans}$$

www.e-kitabi.com

c05.qxd 6/24/08 3:25 PM Page 141

© 2009 by R.C. Hibbeler. Published by Pearson Prentice Hall, Pearson Education, Inc., Upper Saddle River, NJ. All rights reserved. This material is protected under all copyright laws as they currently exist. No portion of this material may be reproduced, in any form or by any means, without permission in writing from the publisher.

***5–16.** The cable AB is subjected to a uniform loading of 200 N/m. If the weight of the cable is neglected and the slope angles at points A and B are 30° and 60°, respectively, determine the curve that defines the cable shape and the maximum tension developed in the cable.

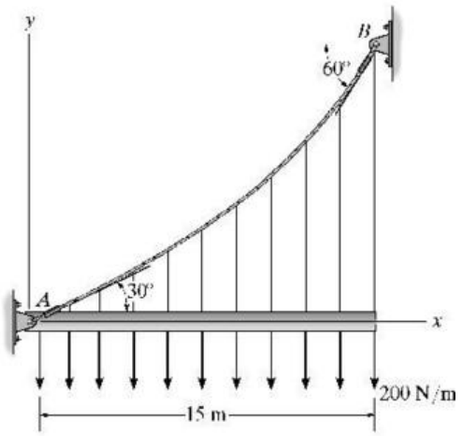

Here the boundary conditions are different from those in the text.

Integrate Eq. 5–2,

$$T\sin\theta = 200x + C_1$$

Divide by Eq. 5–4, and use Eq. 5–3

$$\frac{dy}{dx} = \frac{1}{F_H}(200x + C_1)$$

$$y = \frac{1}{F_H}(100x^2 + C_1x + C_2)$$

At $x = 0$, $y = 0$: $C_2 = 0$

At $x = 0$, $\frac{dy}{dx} = \tan 30°$; $C_1 = F_H \tan 30°$

$$y = \frac{1}{F_H}(100x^2 + F_H \tan 30°\, x)$$

$$\frac{dy}{dx} = \frac{1}{F_H}(200x + F_H \tan 30°)$$

At $x = 15$ m, $\frac{dy}{dx} = \tan 60°$; $F_H = 2598$ N

$$y = (38.5x^2 + 577x)(10^{-3})\ \text{m} \qquad \textbf{Ans}$$

$$\theta_{max} = 60°$$

$$T_{max} = \frac{F_H}{\cos\theta_{max}} = \frac{2598}{\cos 60°} = 5196\ \text{N}$$

$$T_{max} = 5.20\ \text{kN} \qquad \textbf{Ans}$$

5–17. The cable is subjected to the uniform loading. If the slope of the cable at point O is zero, determine the equation of the curve and the force in the cable at O and B.

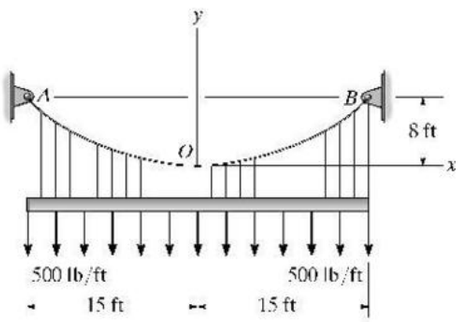

From Eq. 5–9,

$$y = \frac{h}{L^2}x^2 = \frac{8}{(15)^2}x^2$$

$$y = 0.0356x^2 \qquad \textbf{Ans}$$

From Eq. 5–8

$$T_O = F_H = \frac{w_0 L^2}{2h} = \frac{500(15)^2}{2(8)} = 7031.25\ \text{lb} = 7.03\ \text{k} \qquad \textbf{Ans}$$

From Eq. 5–10,

$$T_B = T_{max} = \sqrt{(F_H)^2 + (w_0 L)^2} = \sqrt{(7031.25)^2 + [(500)(15)]^2} = 10\,280.5\ \text{lb} = 10.3\ \text{k} \qquad \textbf{Ans}$$

Also, from Eq. 5–11

$$T_B = T_{max} = w_0 L\sqrt{1 + \left(\frac{L}{2h}\right)^2} = 500(15)\sqrt{1 + \left(\frac{15}{2(8)}\right)^2} = 10\,280.5\ \text{lb} = 10.3\ \text{k} \qquad \textbf{Ans}$$

www.e-kitabi.com

© 2009 by R.C. Hibbeler. Published by Pearson Prentice Hall, Pearson Education, Inc., Upper Saddle River, NJ. All rights reserved. This material is protected under all copyright laws as they currently exist. No portion of this material may be reproduced, in any form or by any means, without permission in writing from the publisher.

5–18. Determine the maximum and minimum tension in the parabolic cable and the force in each of the hangers. The girder is subjected to the uniform load and is pin connected at B.

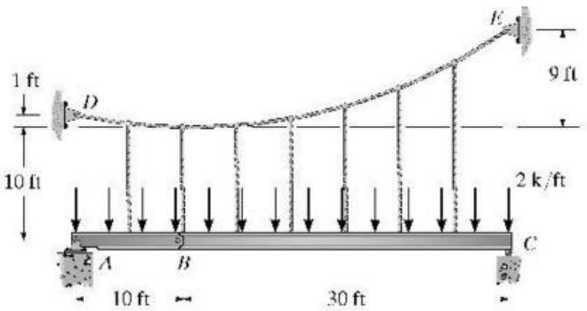

Member BC:

$\overset{+}{\rightarrow} \Sigma F_x = 0;$ $\quad B_x = 0$

Member AB:

$\overset{+}{\rightarrow} \Sigma F_x = 0;$ $\quad A_x = 0$

FBD 1:

$\zeta + \Sigma M_A = 0;$ $\quad F_H(1) - B_y(10) - 20(5) = 0$

FBD 2:

$\zeta + \Sigma M_C = 0;$ $\quad -F_H(9) - B_y(30) + 80(15) = 0$

Solving,

$$B_y = 0. \quad F_H = F_{min} = 100 \text{ k}$$ Ans

Max. cable force occurs at E, where slope is the maximum.

From Eq. 5–8,

$$w_0 = \frac{2F_H h}{L^2} = \frac{2(100)(9)}{30^2} = 2 \text{ k/ft}$$

From Eq. 5–11,

$$F_{max} = w_0 L \sqrt{1 + \left(\frac{L}{2h}\right)^2} = 2(30)\sqrt{1 + \left(\frac{30}{2(9)}\right)^2}$$

$$F_{max} = 117 \text{ k}$$ Ans

Each hanger carries 5 ft of w_0.

$T = (2 \text{ k/ft})(5 \text{ ft}) = 10 \text{ k}$ Ans

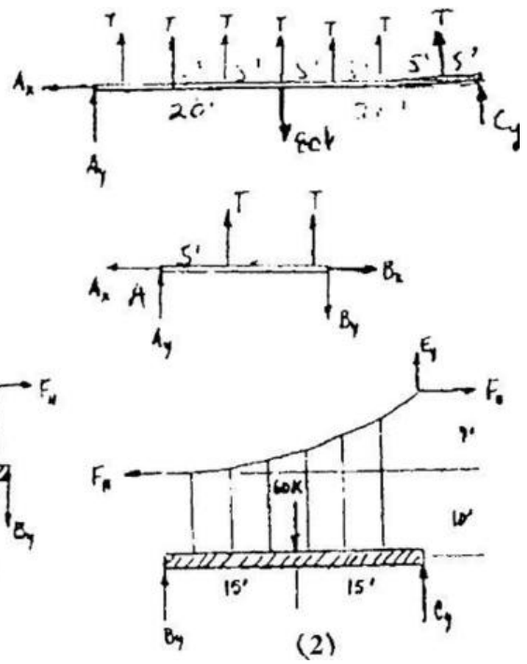

5–19. Draw the shear and moment diagrams for the pin-connected girders AB and BC. The cable has a parabolic shape.

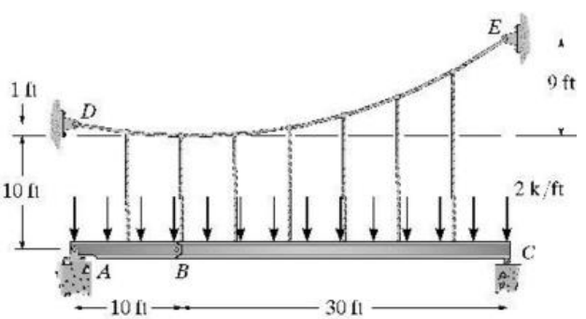

$\zeta + \Sigma M_A = 0;$ $\quad T(5) + T(10) + T(15) + T(20) + T(25) + T(30) + T(35) + C_y(40) - 80(20) = 0$

Set $T = 10$ k (See solution to Prob. 5–18)

$C_y = 5$ k

$+\uparrow \Sigma F_y = 0;$ $\quad 7(10) + 5 - 80 + A_y = 0$

$A_y = 5$ k

$M_{max} = 6.25$ k Ans

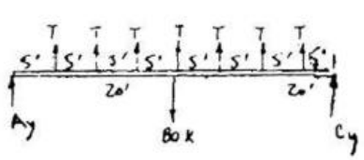

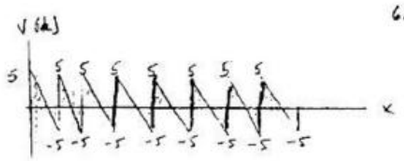

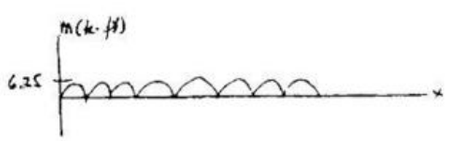

www.e-kitabi.com

c05.qxd 6/24/08 3:25 PM Page 143

© 2009 by R.C. Hibbeler. Published by Pearson Prentice Hall, Pearson Education, Inc., Upper Saddle River, NJ. All rights reserved. This material is protected under all copyright laws as they currently exist. No portion of this material may be reproduced, in any form or by any means, without permission in writing from the publisher.

***5–20.** The beams AB and BC are supported by the cable that has a parabolic shape. Determine the tension in the cable at points D, F, and E, and the force in each of the equally spaced hangers.

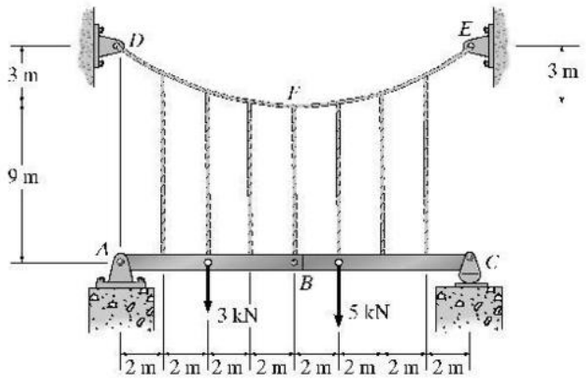

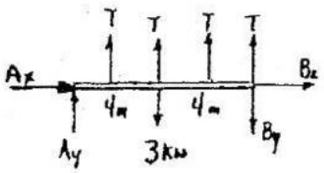

Member AB :

$\overset{+}{\rightarrow} \Sigma F_x = 0;$ $\quad B_x = 0$

$\circlearrowleft + \Sigma M_A = 0;$ $\quad F_F(12) - F_F(9) - B_y(8) - 3(4) = 0$

$3F_F - B_y(8) = 12 \qquad (1)$

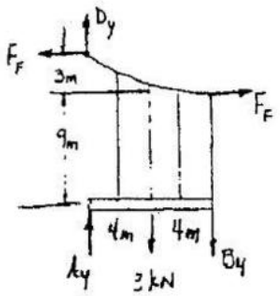

Member BC :

$\overset{+}{\rightarrow} \Sigma F_x = 0$ $\quad A_x = 0$

$\circlearrowleft + \Sigma M_C = 0;$ $\quad -F_F(12) + F_F(9) - B_y(8) + 5(6) = 0$

$-3F_F - B_y(8) = -30 \qquad (2)$

Solving Eqs. (1) and (2),

$B_y = 1.125$ kN, $\quad F_F = 7.0$ kN $\qquad$ Ans

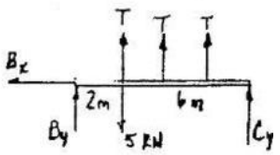

From Eq. 5–8

$$w_0 = \frac{2F_H h}{L^2} = \frac{2(7)(3)}{8^2} = 0.65625 \text{ kN/m}$$

From Eq. 5–11,

$$T_{max} = w_0 L\sqrt{1 + \left(\frac{L}{2h}\right)^2} = 0.65625(8)\sqrt{1 + \left(\frac{8}{2(3)}\right)^2}$$

$T_{max} = T_E = T_D = 8.75$ kN $\qquad$ Ans

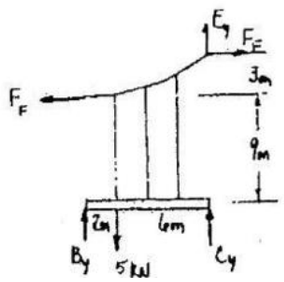

Load on each hanger.

$T = 0.65625(2) = 1.3125$ kN $= 1.31$ kN $\qquad$ Ans

www.e-kitabi.com

© 2009 by R.C. Hibbeler. Published by Pearson Prentice Hall, Pearson Education, Inc., Upper Saddle River, NJ. All rights reserved. This material is protected under all copyright laws as they currently exist. No portion of this material may be reproduced, in any form or by any means, without permission in writing from the publisher.

5–21. Draw the shear and moment diagrams for beams *AB* and *BC*. The cable has a parabolic shape.

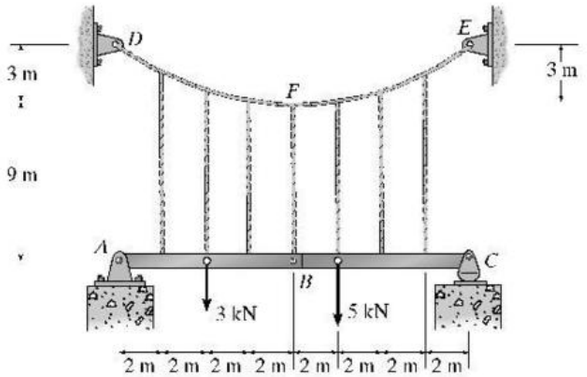

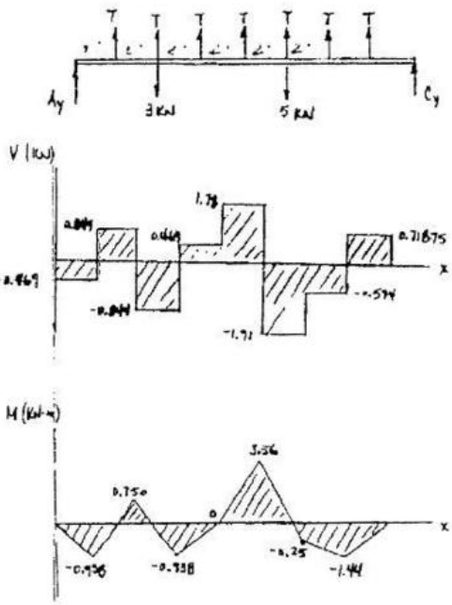

Member *ABC*:

$\zeta + \Sigma M_A = 0$: $T(2) + T(4) + T(6) + T(8) + T(10) + T(12) + T(14) + C_y(16) - 3(4) - 5(10) = 0$

Set $T = 1.3125$ kN (See solution to Prob. 5–20).

$C_y = -0.71875$ kN

$+\uparrow \Sigma F_y = 0$: $7(1.3125) - 8 - 0.71875 + A_y = 0$

$A_y = -0.46875$ kN

$M_{max} = 3.56$ kN·m **Ans**

5–22. The trusses are pin connected and suspended from the parabolic cable. Determine the maximum force in the cable when the structure is subjected to the loading shown.

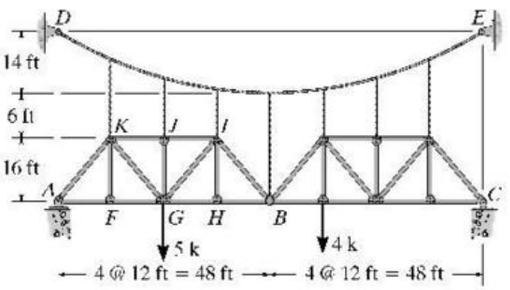

Entire structure:

$\zeta + \Sigma M_C = 0$: $4(36) + 5(72) + F_H(36) - F_H(36) - (A_y + D_y)(96) = 0$

$(A_y + D_y) = 5.25$ (1)

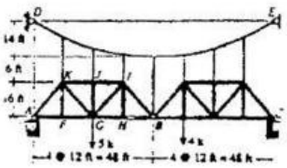

Section *ABD*:

$\zeta + \Sigma M_B = 0$: $F_H(14) - (A_y + D_y)(48) + 5(24) = 0$

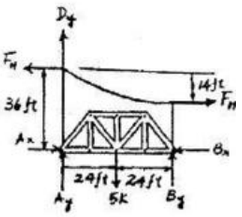

Using Eq. (1):

$F_H = 9.42857$ k

From Eq. 5–8:

$$w_0 = \frac{2F_H h}{L^2} = \frac{2(9.42857)(14)}{48^2} = 0.11458 \text{ k/ft}$$

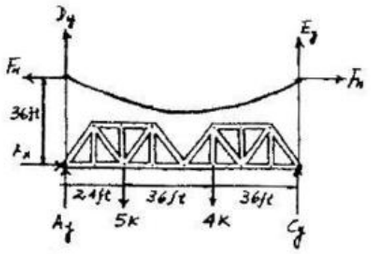

From Eq. 5–11:

$$T_{max} = w_0 L\sqrt{1 + \left(\frac{L}{2h}\right)^2} = 0.11458(48)\sqrt{1 + \left[\frac{48}{2(14)}\right]^2} = 10.9 \text{ k}$$ **Ans**

www.e-kitabi.com

© 2009 by R.C. Hibbeler. Published by Pearson Prentice Hall, Pearson Education, Inc., Upper Saddle River, NJ. All rights reserved. This material is protected under all copyright laws as they currently exist. No portion of this material may be reproduced, in any form or by any means, without permission in writing from the publisher.

5–23. Determine the resultant forces at the pins A, B, and C of the three-hinged arched roof truss.

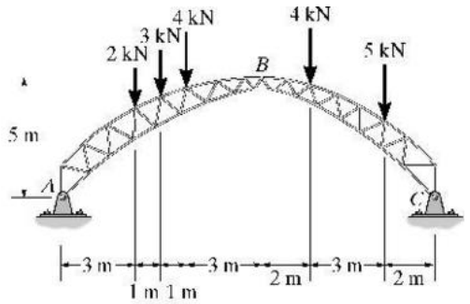

Member AB :

$\zeta + \Sigma M_A = 0$: $B_x(5) + B_y(8) - 2(3) - 3(4) - 4(5) = 0$

Member BC :

$\zeta + \Sigma M_C = 0$: $-B_x(5) + B_y(7) + 5(2) + 4(5) = 0$

Solving.

$B_y = 0.533$ k, $B_x = 6.7467$ k

Member AB :

$\rightarrow \Sigma F_x = 0$: $A_x = 6.7467$ k

$+\uparrow \Sigma F_y = 0$: $A_y - 9 + 0.533 = 0$

$A_y = 8.467$ k

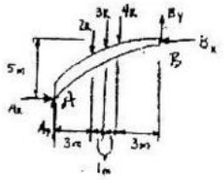

Member BC :

$\rightarrow \Sigma F_x = 0$: $C_x = 6.7467$ k

$+\uparrow \Sigma F_y = 0$: $C_y - 9 - 0.533 = 0$

$C_y = 9.533$ k

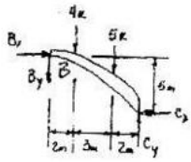

$F_B = \sqrt{(0.533)^2 + (6.7467)^2} = 6.77$ k Ans

$F_A = \sqrt{(6.7467)^2 + (8.467)^2} = 10.8$ k Ans

$F_C = \sqrt{(6.7467)^2 + (9.533)^2} = 11.7$ k Ans

***5–24.** Determine the horizontal and vertical components of reaction at A, B, and C of the three-hinged arch. Assume A, B, and C are pin connected.

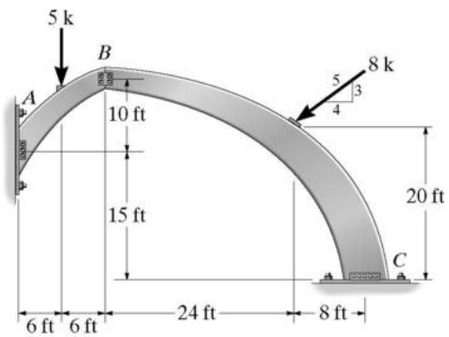

Member AB :

$\zeta + \Sigma M_A = 0$: $-B_y(12) + B_x(10) - 5(6) = 0$

$-6B_y + 5B_x - 15 = 0$ (1)

Member BC :

$\zeta + \Sigma M_C = 0$: $-B_y(32) - B_x(25) + \frac{4}{5}(8)(20) + \frac{3}{5}(8)(8) = 0$

$-32B_y - 25B_x + 166.4 = 0$ (2)

Solving Eqs. (1) and (2) yields :

$B_y = 1.474$ k $= 1.47$ k Ans

$B_x = 4.769$ k $= 4.77$ k Ans

Member AB :

$\rightarrow \Sigma F_x = 0$: $A_x - 4.769 = 0$

$A_x = 4.77$ k Ans

$+\uparrow \Sigma F_y = 0$: $A_y - 5 - 1.474 = 0$

$A_y = 6.47$ k Ans

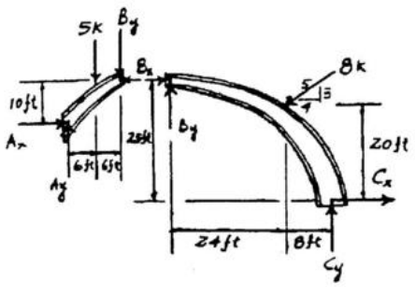

Member BC :

$\rightarrow \Sigma F_x = 0$: $4.769 + C_x - \frac{4}{5}(8) = 0$

$C_x = 1.63$ k Ans

$+\uparrow \Sigma F_y = 0$: $1.474 + C_y - \frac{3}{5}(8) = 0$

$C_y = 3.33$ k Ans

www.e-kitabi.com

© 2009 by R.C. Hibbeler. Published by Pearson Prentice Hall, Pearson Education, Inc., Upper Saddle River, NJ. All rights reserved. This material is protected under all copyright laws as they currently exist. No portion of this material may be reproduced, in any form or by any means, without permission in writing from the publisher.

5–25. The laminated-wood three-hinged arch is subjected to the loading shown. Determine the horizontal and vertical components of reactions at the pins A, B, and C, and draw the moment diagram for member AB.

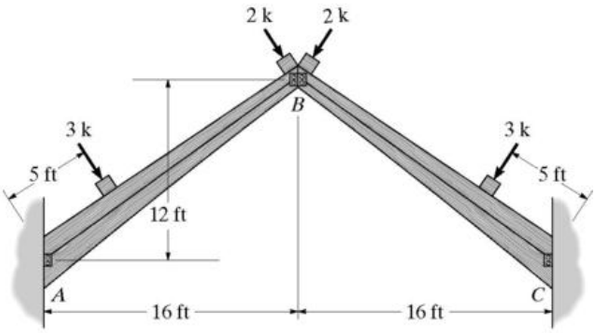

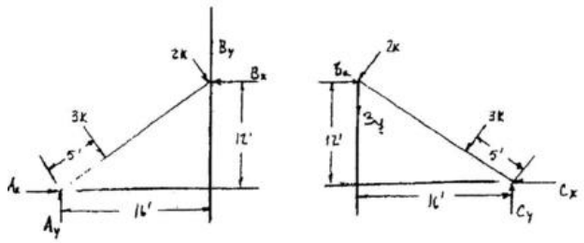

Member AB:

$(+\Sigma M_A = 0;\quad B_x(12) + B_y(16) - 3(5) - 2(20) = 0$

Member BC:

$(+\Sigma M_C = 0;\quad -B_x(12) + B_y(16) + 3(5) + 2(20) = 0$

Solving:

$B_x = 4.583$ k, $\quad B_y = 0$ **Ans**

Member AB:

$\rightarrow \Sigma F_x = 0;\quad A_x - 4.583 + (3+2)\left(\frac{3}{5}\right) = 0$

$A_x = 1.58$ k **Ans**

$+\uparrow \Sigma F_y = 0;\quad A_y - (3+2)\left(\frac{4}{5}\right) = 0$

$A_y = 4.00$ k **Ans**

By symmetry:

$C_x = 1.58$ k **Ans**

$C_y = 4.00$ k **Ans**

Using the second FBD for member AB:

$(+\Sigma M_A = 0;\quad -3(5) - 2(20) + B_y'(20) = 0$

$B_y' = 2.75$ k

$+\uparrow \Sigma F_y' = 0;\quad A_y' - 3 - 2 + 2.75 = 0$

$A_y' = 2.25$ k

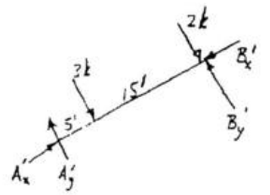

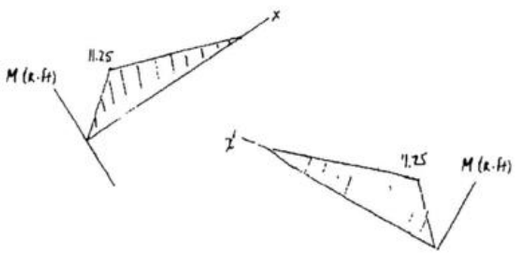

5–26. The arch structure is subjected to the loading shown. Determine the horizontal and vertical components of reaction at A and D, and the tension in the rod AD.

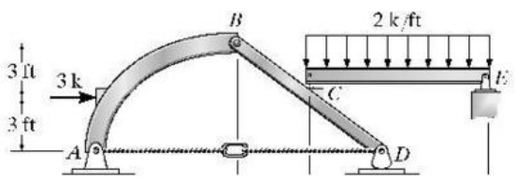

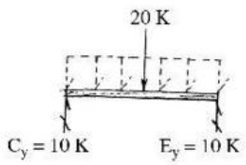

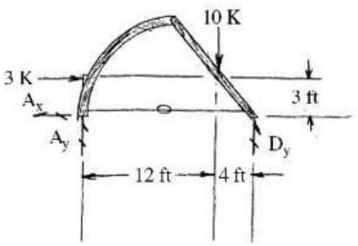

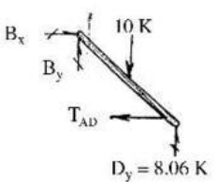

$\rightarrow \Sigma F_x = 0;\quad -A_x + 3\text{ k} = 0;\quad A_x = 3\text{ k}$ **Ans**

$(+\Sigma M_A = 0;\quad -3\text{ k}(3\text{ ft}) - 10\text{ k}(12\text{ ft}) + D_y(16\text{ ft}) = 0$

$D_y = 8.06$ k **Ans**

$+\uparrow \Sigma F_y = 0;\quad A_y - 10\text{ k} + 8.06\text{ k} = 0$

$A_y = 1.94$ k **Ans**

$(+\Sigma M_B = 0;\quad 8.06\text{ k}(8\text{ ft}) - 10\text{ k}(4\text{ ft}) - T_{AD}(6\text{ ft}) = 0$

$T_{AD} = 4.08$ k **Ans**

www.e-kitabi.com

c05.qxd 6/24/08 3:26 PM Page 147

© 2009 by R.C. Hibbeler. Published by Pearson Prentice Hall, Pearson Education, Inc., Upper Saddle River, NJ. All rights reserved. This material is protected under all copyright laws as they currently exist. No portion of this material may be reproduced, in any form or by any means, without permission in writing from the publisher.

5–27. The three-hinged truss arch is subjected to the loading shown. Determine the horizontal and vertical components of reactions at the pins A, B, and C.

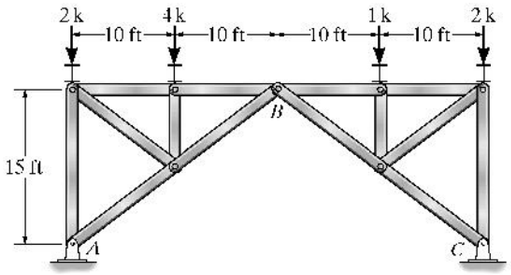

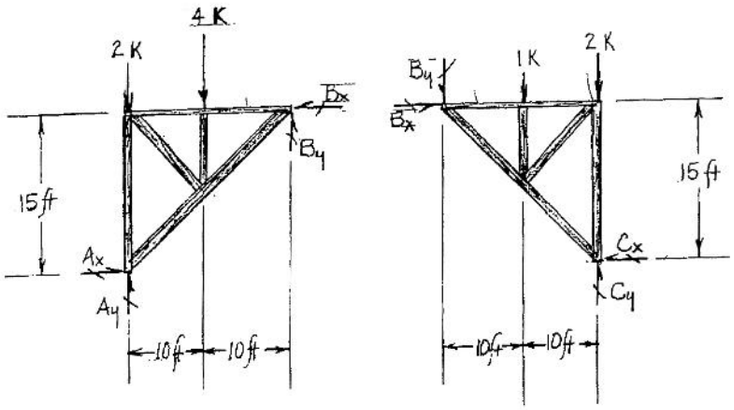

$\curvearrowleft +\Sigma M_A = 0;\quad B_x\,(15\text{ ft}) + B_y\,(20\text{ ft}) - 4\text{ k}\,(10\text{ ft}) = 0$

$\curvearrowleft +\Sigma M_C = 0;\quad B_y\,(20\text{ ft}) - B_x\,(15\text{ ft}) + 1\text{ k}\,(10\text{ ft}) = 0$

$B_x = 1.67\text{ k}$ **Ans**

$B_y = 0.75\text{ k}$ **Ans**

$\overset{+}{\rightarrow}\Sigma F_x = 0;\quad A_x - 1.67\text{ k} = 0;\quad A_x = 1.67\text{ k}$ **Ans**

$+\uparrow \Sigma F_y = 0;\quad A_y - 2\text{ k} - 4\text{ k} + 0.75\text{ k} = 0;\quad A_y = 5.25\text{ k}$ **Ans**

$\overset{+}{\rightarrow}\Sigma F_x = 0;\quad -C_x + 1.67\text{ k} = 0;\quad C_x = 1.67\text{ k}$ **Ans**

$+\uparrow \Sigma F_y = 0;\quad C_y - 2\text{ k} - 1\text{ k} - 0.75\text{ k} = 0;\quad C_y = 3.75\text{ k}$ **Ans**

www.e-kitabi.com

© 2009 by R.C. Hibbeler. Published by Pearson Prentice Hall, Pearson Education, Inc., Upper Saddle River, NJ. All rights reserved. This material is protected under all copyright laws as they currently exist. No portion of this material may be reproduced, in any form or by any means, without permission in writing from the publisher.

***5–28.** The bridge is constructed as a *three-hinged trussed arch*. Determine the horizontal and vertical components of reaction at the hinges (pins) at A, B, and C. The dashed member DE is intended to carry *no* force.

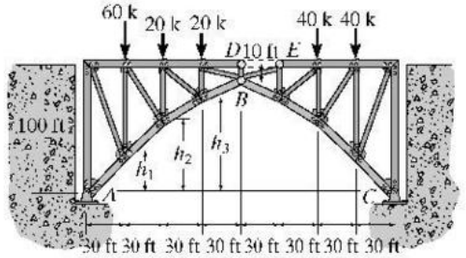

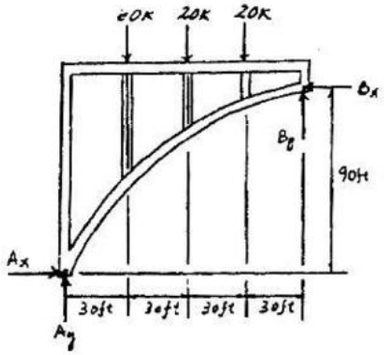

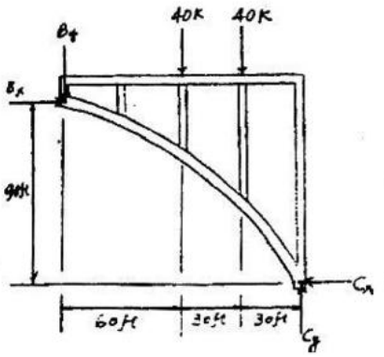

Member *AB*:

$\zeta + \Sigma M_A = 0;$ $\quad B_x(90) + B_y(120) - 20(90) - 20(60) - 60(30) = 0$

$9B_x + 12B_y = 480 \quad (1)$

Member *BC*:

$\zeta + \Sigma M_C = 0;$ $\quad -B_x(90) + B_y(120) + 40(30) + 40(60) = 0$

$-9B_x + 12B_y = -360 \quad (2)$

Solving Eqs. (1) and (2) yields:

$B_x = 46.67 \text{ k} = 46.7 \text{ k}, \quad B_y = 5.00 \text{ k}$ **Ans**

Member *AB*:

$\overset{+}{\rightarrow}\Sigma F_x = 0;$ $\quad A_x - 46.67 = 0$

$A_x = 46.7 \text{ k}$ **Ans**

$+\uparrow \Sigma F_y = 0;$ $\quad A_y - 60 - 20 - 20 + 5.00 = 0$

$A_y = 95.0 \text{ k}$ **Ans**

Member *BC*:

$\overset{+}{\rightarrow}\Sigma F_x = 0;$ $\quad -C_x + 46.67 = 0$

$C_x = 46.7 \text{ k}$ **Ans**

$+\uparrow \Sigma F_y = 0;$ $\quad C_y - 5.00 - 40 - 40 = 0$

$C_y = 85 \text{ k}$ **Ans**

5–29. Determine the design heights h_1, h_2, and h_3 of the bottom cord of the truss so the three-hinged trussed arch responds as a funicular arch.

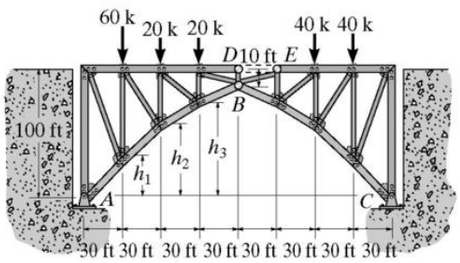

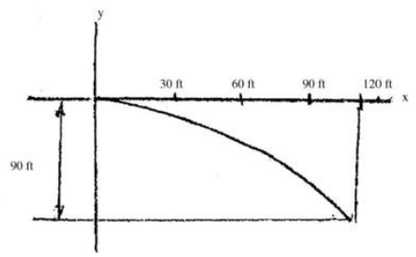

$y = -Cx^2$

$-100 = -C(120)^2$

$C = 0.0069444$

Thus,

$y = -0.0069444x^2$

$y_1 = -0.0069444(90 \text{ ft})^2 = -56.25 \text{ ft}$

$y_2 = -0.0069444(60 \text{ ft})^2 = -25.00 \text{ ft}$

$y_3 = -0.0069444(30 \text{ ft})^2 = -6.25 \text{ ft}$

$h_1 = 100 \text{ ft} - 56.25 \text{ ft} = 43.75 \text{ ft}$ **Ans**

$h_2 = 100 \text{ ft} - 25.00 \text{ ft} = 75.00 \text{ ft}$ **Ans**

$h_3 = 100 \text{ ft} - 6.25 \text{ ft} = 93.75 \text{ ft}$ **Ans**

www.e-kitabi.com

c05.qxd 6/24/08 3:26 PM Page 149

© 2009 by R.C. Hibbeler. Published by Pearson Prentice Hall, Pearson Education, Inc., Upper Saddle River, NJ. All rights reserved. This material is protected under all copyright laws as they currently exist. No portion of this material may be reproduced, in any form or by any means, without permission in writing from the publisher.

5–30. The tied three-hinged arch is subjected to the loading shown. Determine the components of reaction at A and C and the tension in the cable.

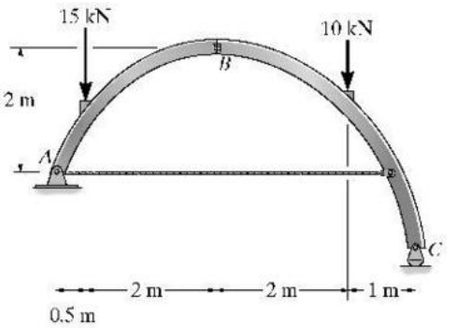

Entire arch :

$\overset{+}{\rightarrow}\Sigma F_x = 0;$ $\quad A_x = 0$ **Ans**

$\zeta+\Sigma M_A = 0;$ $\quad C_y(5.5) - 15(0.5) - 10(4.5) = 0$

$C_y = 9.545\ \text{kN} = 9.55\ \text{kN}$ **Ans**

$+\uparrow\Sigma F_y = 0;$ $\quad 9.545 - 15 - 10 + A_y = 0$

$A_y = 15.45\ \text{kN} \approx 15.5\ \text{kN}$ **Ans**

Section AB :

$\zeta+\Sigma M_B = 0;$ $\quad -15.45(2.5) + T(2) + 15(2) = 0$

$T = 4.32\ \text{kN}$ **Ans**

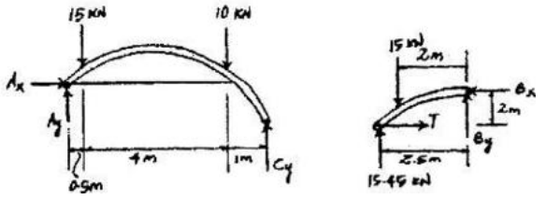

5–31. Determine the horizontal and vertical components of force that pins A and C exert on the frame.

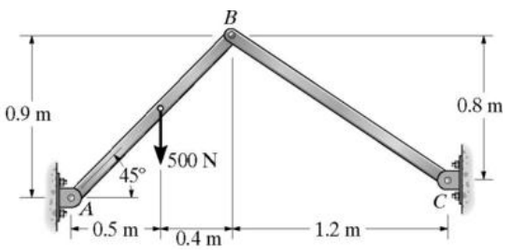

BC is a two-force member

Member AB :

$\zeta+\Sigma M_A = 0;$ $\quad -500\,(0.5) + F_{BC}\left(\frac{3}{\sqrt{13}}\right)(0.9) + F_{BC}\left(\frac{2}{\sqrt{13}}\right)(0.9) = 0$

$F_{BC} = 200.3\ \text{N}$

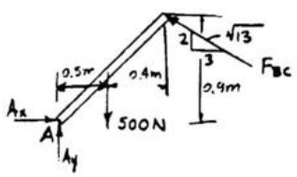

Thus,

$C_x = 200.3\left(\frac{3}{\sqrt{13}}\right) = 167\ \text{N}$ **Ans**

$C_y = 200.3\left(\frac{2}{\sqrt{13}}\right) = 111\ \text{N}$ **Ans**

$\overset{+}{\rightarrow}\Sigma F_x = 0;$ $\quad A_x - 200.3\left(\frac{3}{\sqrt{13}}\right) = 0$

$A_x = 167\ \text{N}$ **Ans**

$+\uparrow\Sigma F_y = 0;$ $\quad A_y - 500 + (200.3)\left(\frac{2}{\sqrt{13}}\right) = 0$

$A_y = 389\ \text{N}$ **Ans**

www.e-kitabi.com

c05.qxd 6/24/08 3:26 PM Page 150

© 2009 by R.C. Hibbeler. Published by Pearson Prentice Hall, Pearson Education, Inc., Upper Saddle River, NJ. All rights reserved. This material is protected under all copyright laws as they currently exist. No portion of this material may be reproduced, in any form or by any means, without permission in writing from the publisher.

***5–32.** Determine the horizontal and vertical components of force that pins A and C exert on the frame.

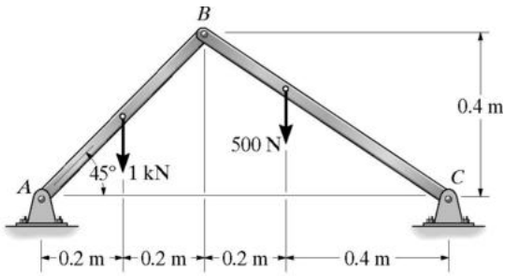

Member AB :

$\curvearrowleft +\Sigma M_A = 0;\quad B_y\,(0.4) - 1000\,(0.2) + B_x\,(0.4) = 0$

Member CB :

$\curvearrowleft +\Sigma M_C = 0;\quad B_y\,(0.6) + 500\,(0.4) - B_x\,(0.4) = 0$

Solving :

$B_y = 0$

$B_x = 500\ \text{N}$

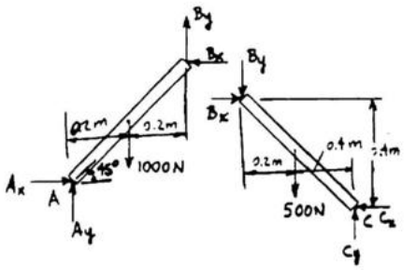

Member AB :

$\overset{+}{\rightarrow} \Sigma F_x = 0;\quad A_x - 500 = 0$

$A_x = 500\ \text{N}$ **Ans**

$+\uparrow \Sigma F_y = 0;\quad A_y - 1000 + 0 = 0$

$A_y = 1000\ \text{N}$ **Ans**

Member BC :

$\overset{+}{\rightarrow} \Sigma F_x = 0;\quad 500 - C_x = 0$

$C_x = 500\ \text{N}$ **Ans**

$+\uparrow \Sigma F_y = 0;\quad 0 - 500 + C_y = 0$

$C_y = 500\ \text{N}$ **Ans**

www.e-kitabi.com

c06.qxd 6/24/08 3:31 PM Page 151

© 2009 by R.C. Hibbeler. Published by Pearson Prentice Hall, Pearson Education, Inc., Upper Saddle River, NJ. All rights reserved. This material is protected under all copyright laws as they currently exist. No portion of this material may be reproduced, in any form or by any means, without permission in writing from the publisher.

6–1. Draw the influence lines for (a) the vertical reaction at A, (b) the shear at C, and (c) the moment at C. Solve this problem using the basic method of Sec. 6–1.

6–2. Solve Prob. 6–1 using Müller Breslau's principle.

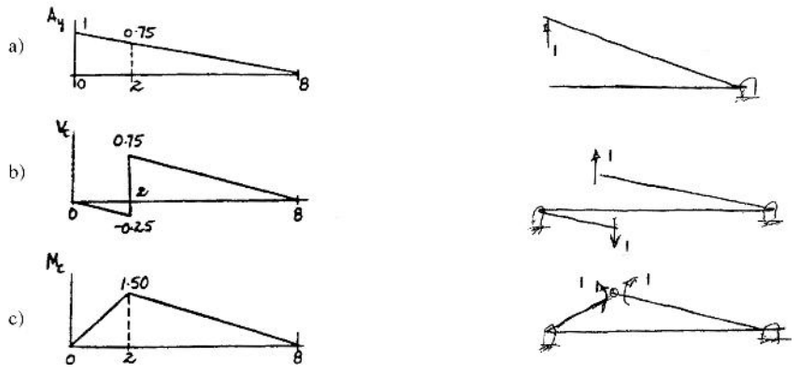

6–3. Draw the influence lines for (a) the vertical reaction at A, (b) the moment at A, and (c) the shear at B. Assume the support at A is fixed. Solve this problem using the basic method of Sec. 6–1.

***6–4.** Solve Prob. 6–3 using Müller-Breslau's principle.

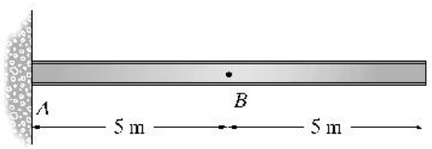

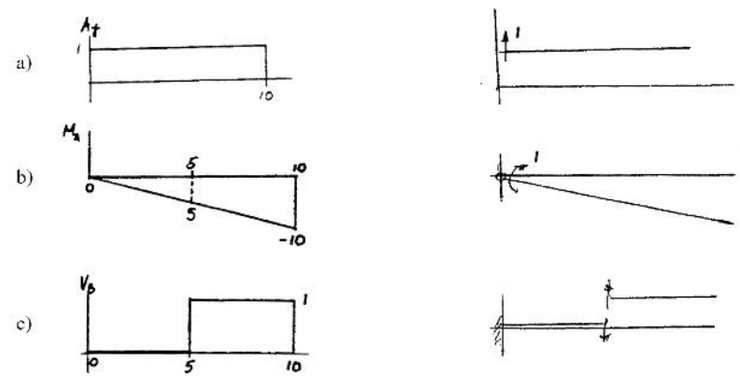

www.e-kitabi.com

c06.qxd 6/24/08 3:31 PM Page 152

© 2009 by R.C. Hibbeler. Published by Pearson Prentice Hall, Pearson Education, Inc., Upper Saddle River, NJ. All rights reserved. This material is protected under all copyright laws as they currently exist. No portion of this material may be reproduced, in any form or by any means, without permission in writing from the publisher.

6–5. Draw the influence line for (a) the vertical reaction at A, (b) the shear at C, and (c) the moment at C. Solve this problem using the basic method of Sec. 6–1.

6–6. Solve Prob. 6–5 using Müller-Breslau's principle.

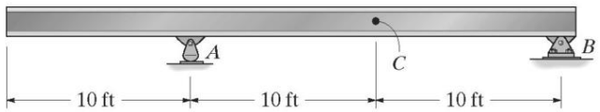

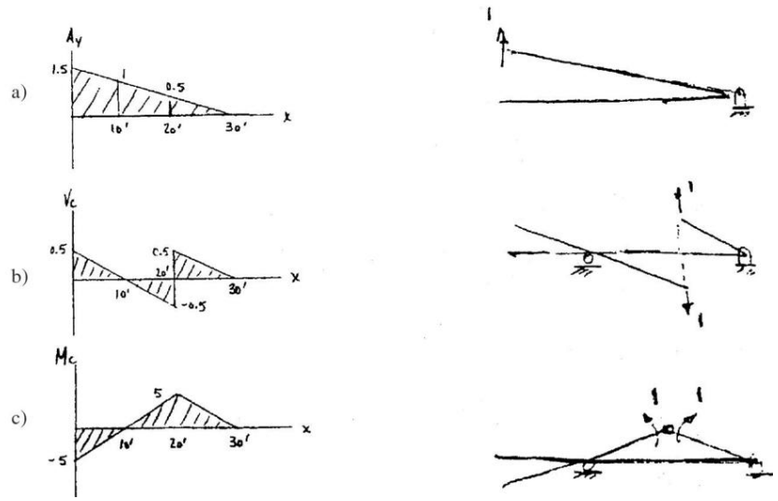

6–7. Draw the influence lines for (a) the shear at the fixed support A, and (b) the moment at B.

***6–8.** Solve Prob. 6–7 using Müller-Breslau's principle.

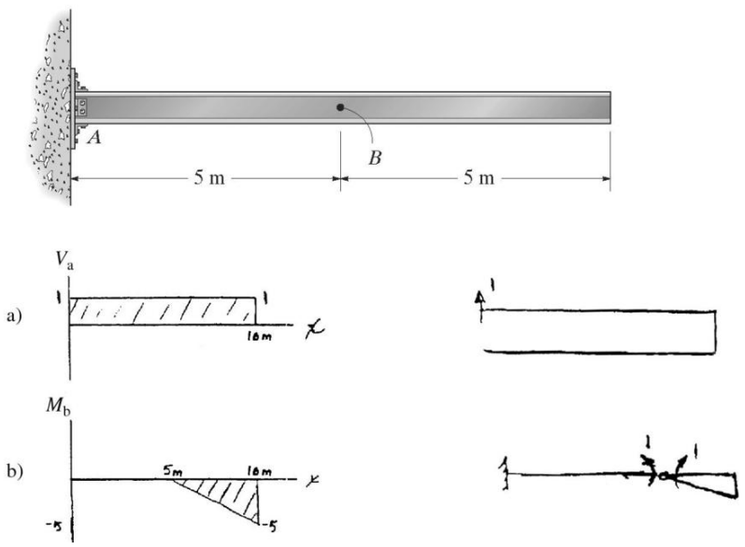

www.e-kitabi.com

c06.qxd 6/24/08 3:31 PM Page 153

© 2009 by R.C. Hibbeler. Published by Pearson Prentice Hall, Pearson Education, Inc., Upper Saddle River, NJ. All rights reserved. This material is protected under all copyright laws as they currently exist. No portion of this material may be reproduced, in any form or by any means, without permission in writing from the publisher.

6–9. Draw the influence line for (a) the vertical reaction at B, (b) the moment at C, and (c) the shear at C. Assume A is a pin and B is a roller. Solve this problem using the basic method of Sec. 6–1.

6–10. Solve Prob. 6–9 using Müller-Breslau's principle.

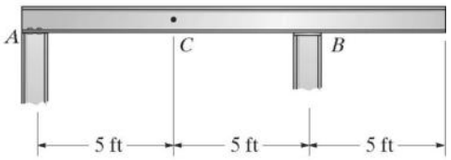

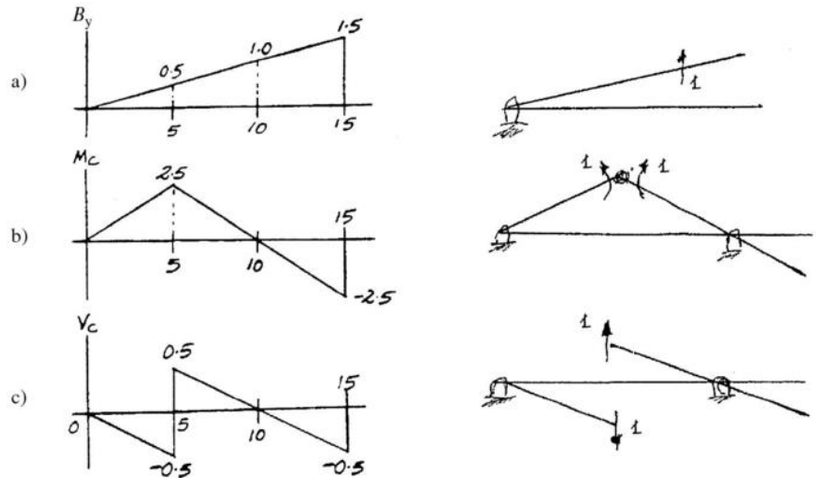

6–11. Draw the influence lines for (a) the vertical reaction at B, (b) the shear at C, and (c) the moment at C. Solve this problem using the basic method of Sec. 6–1.

***6–12.** Solve Prob. 6–11 using Müller-Breslau's principle.

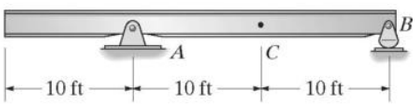

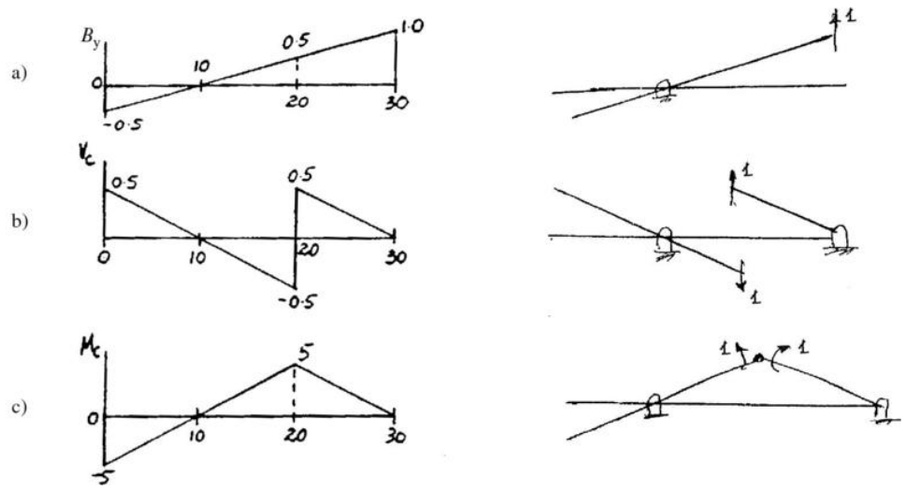

www.e-kitabi.com

c06.qxd 6/24/08 3:31 PM Page 154

© 2009 by R.C. Hibbeler. Published by Pearson Prentice Hall, Pearson Education, Inc., Upper Saddle River, NJ. All rights reserved. This material is protected under all copyright laws as they currently exist. No portion of this material may be reproduced, in any form or by any means, without permission in writing from the publisher.

6–13. Draw the influence lines for (a) the moment at A, and (b) the moment at B. Assume the support at A is fixed. Solve this problem using the basic method of Sec. 6–1.

6–14. Solve Prob. 6–13 using Müller-Breslau's principle.

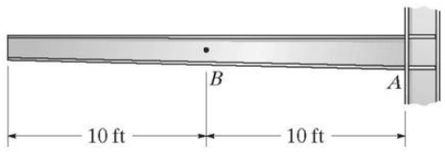

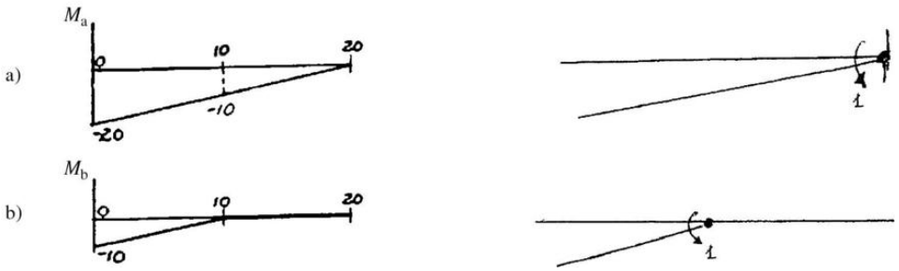

6–15. Draw the influence lines for (a) the moment at C, (b) the vertical reaction at A, and (c) the vertical reaction at B. There is a short link at E. Solve this problem using the basic method of Sec. 6–1.

***6–16.** Solve Prob. 6–15 using Müller-Breslau's principle.

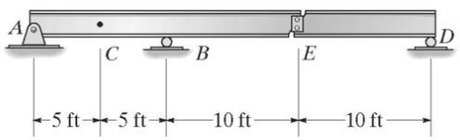

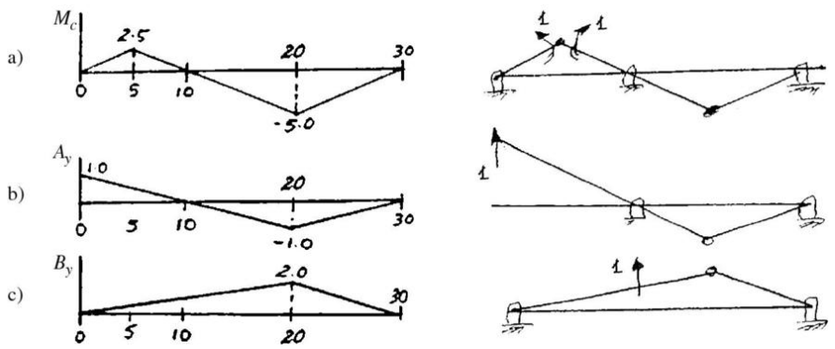

www.e-kitabi.com

c06.qxd 6/24/08 3:31 PM Page 155

© 2009 by R.C. Hibbeler. Published by Pearson Prentice Hall, Pearson Education, Inc., Upper Saddle River, NJ. All rights reserved. This material is protected under all copyright laws as they currently exist. No portion of this material may be reproduced, in any form or by any means, without permission in writing from the publisher.

6–17. Draw the influence lines for (a) the shear at C, (b) the moment at C, and (c) the vertical reaction at D. Indicate numerical values for the peaks. There is a short vertical link at B, and A is a pin support. Solve this problem using the basic method of Sec. 6–1.

6–18. Solve Prob. 6–17 using Müller-Breslau's principle.

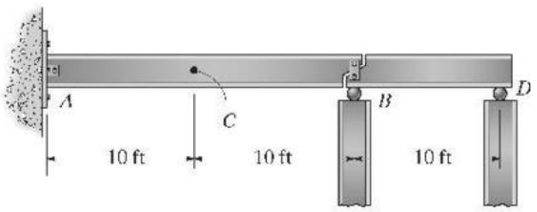

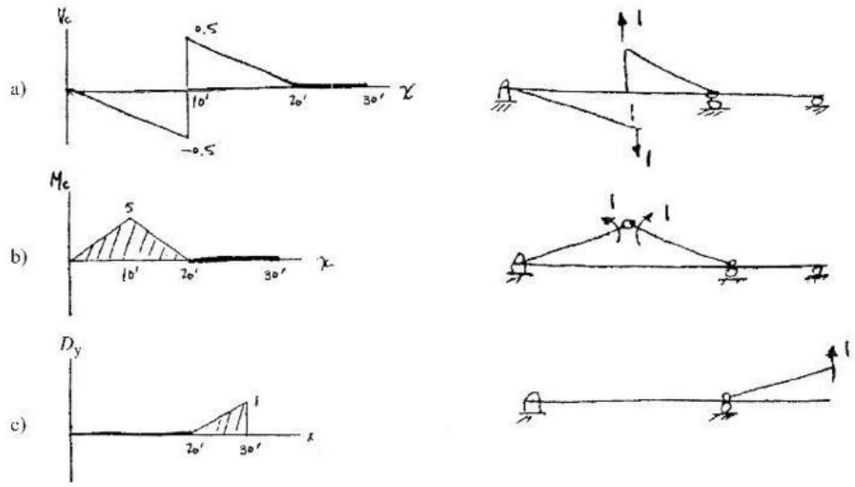

6–19. The beam supports a uniform dead load of 500 N/m and single live concentrated force of 3000 N. Determine (a) the maximum positive moment that can be developed at point C, and (b) the maximum positive shear that can be developed at point C. Assume the support at A is a pin and B is a roller.

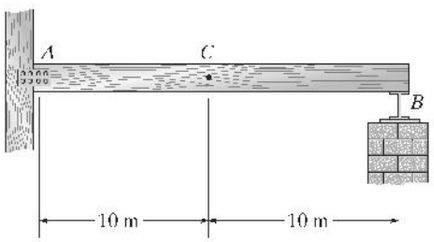

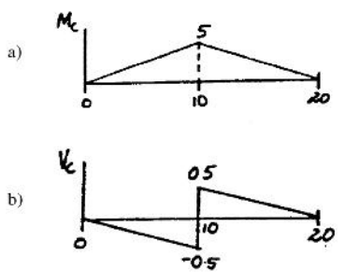

$$(M_C)_{max} = 500\left(\frac{1}{2}\right)(5)(20) + 3000(5)$$
$$= 40\,000\ \text{N}\cdot\text{m} = 40.0\ \text{kN}\cdot\text{m} \quad \text{Ans}$$

$$(V_C)_{max} = 500\left(\frac{1}{2}\right)(0.5)(10) + 3000(0.5) - 500\left(\frac{1}{2}\right)(0.5)(10)$$
$$= 1500\ \text{N} = 1.50\ \text{kN} \quad \text{Ans}$$

www.e-kitabi.com

© 2009 by R.C. Hibbeler. Published by Pearson Prentice Hall, Pearson Education, Inc., Upper Saddle River, NJ. All rights reserved. This material is protected under all copyright laws as they currently exist. No portion of this material may be reproduced, in any form or by any means, without permission in writing from the publisher.

***6–20.** A uniform live load of 0.7 k/ft and a single live concentrated force of 10 k are to be placed on the beam. Determine (a) the maximum positive live vertical reaction at support A, (b) the maximum positive live shear at point C, and (c) the maximum positive live moment at point C. Assume the support at A is a roller and B is a pin.

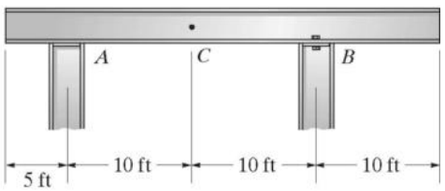

a)

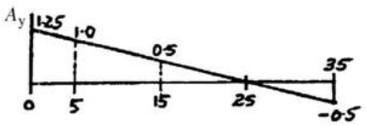

b)

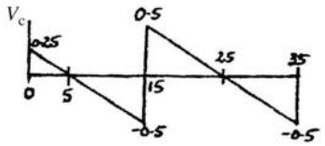

c)

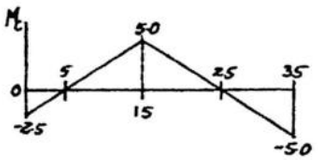

$$(A_y)_{max(+)} = (0.7)\left(\frac{1}{2}\right)(1.25)(25) + 10(1.25)$$
$$= 23.4\ \text{k} \qquad \textbf{Ans}$$

$$(V_c)_{max(+)} = (0.7)\left(\frac{1}{2}\right)(0.25)(5) + (0.7)\left(\frac{1}{2}\right)(0.5)(10) + 10(0.5)$$
$$= 7.19\ \text{k} \qquad \textbf{Ans}$$

$$(M_C)_{max(+)} = (0.7)\left(\frac{1}{2}\right)(5)(20) + 10(5)$$
$$= 85.0\ \text{k}\cdot\text{ft} \qquad \textbf{Ans}$$

6–21. Draw the influence lines for (a) the vertical reaction at B, and (b) the moment at E. Assume the supports at B and D are rollers. There is a short link at C. Solve this problem using the basic method of Sec. 6–1.

6–22. Solve Prob. 6–21 using Müller-Breslau's principle.

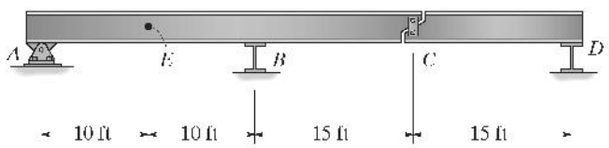

a)

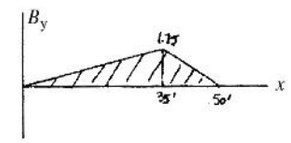

b)

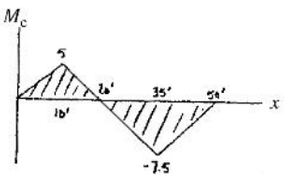

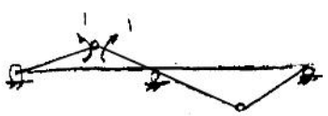

www.e-kitabi.com

© 2009 by R.C. Hibbeler. Published by Pearson Prentice Hall, Pearson Education, Inc., Upper Saddle River, NJ. All rights reserved. This material is protected under all copyright laws as they currently exist. No portion of this material may be reproduced, in any form or by any means, without permission in writing from the publisher.

6–23. The compound beam is subjected to a uniform dead load of 200 lb/ft and a uniform live load of 150 lb/ft. Determine (a) the maximum negative moment these loads develop at A, and (b) the maximum positive shear at D. Assume B is a pin and C is a roller.

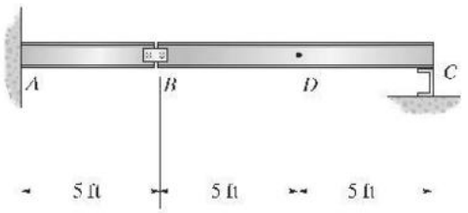

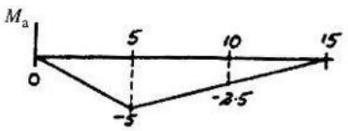

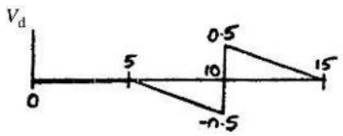

a) $(M_a)_{max(-)} = (200 + 150)\left(\frac{1}{2}\right)(-5)(15)$

$= -13\,125\ \text{lb} \cdot \text{ft}$ **Ans**

b) $(V_d)_{max(+)} = (200)\left(\frac{1}{2}\right)(5)(-0.5) + (200 + 150)\left(\frac{1}{2}\right)5(0.5)$

$= 188\ \text{lb}$ **Ans**

***6–24.** The beam supports a uniform dead load of 500 N/m and a single live concentrated force of 3000 N. Determine (a) the maximum live moment that can be developed at C, and (b) the maximum live positive shear that can be developed at C. Assume the support at A is a roller and B is a pin.

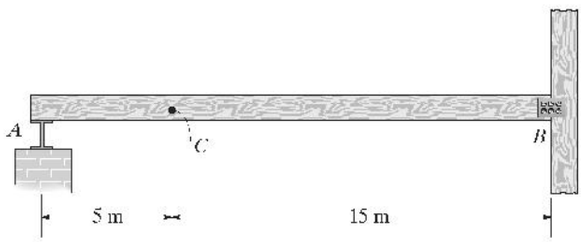

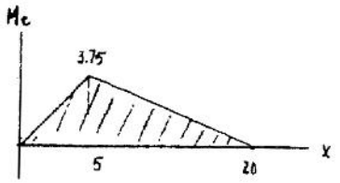

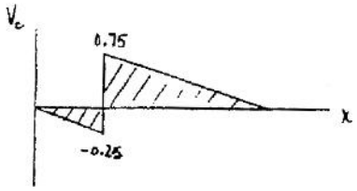

a) $(M_C)_{max} = \frac{1}{2}(20)(3.75)(0.5) + 3.75(3) = 30\ \text{kN} \cdot \text{m}$ **Ans**

b) $(V_C)_{max} = 500\left(\frac{1}{2}\right)(5)(-0.25) + \left(\frac{1}{2}\right)(0.75)(15)(500) + 0.75(3000)$

$= 4750\ \text{N} = 4.75\ \text{kN}$ **Ans**

www.e-kitabi.com

© 2009 by R.C. Hibbeler. Published by Pearson Prentice Hall, Pearson Education, Inc., Upper Saddle River, NJ. All rights reserved. This material is protected under all copyright laws as they currently exist. No portion of this material may be reproduced, in any form or by any means, without permission in writing from the publisher.

6–25. A uniform live load of 0.5 k/ft and a single concentrated force of 20 k are to be placed on the beam. Determine (a) the maximum positive live vertical reaction at support B, (b) the maximum positive live shear at point C, and (c) the maximum positive live moment at point C. Assume the support at A is a pin and B is a roller.

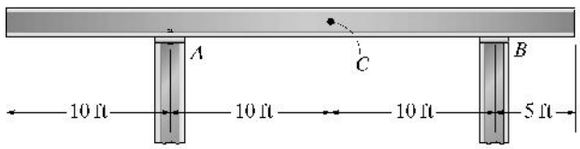

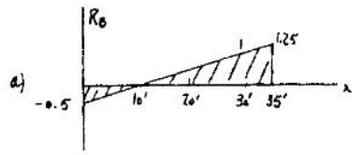

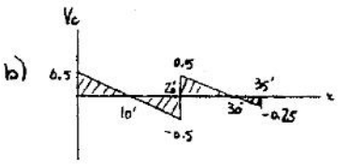

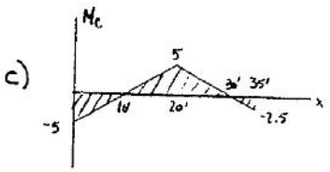

a) $(R_B)_{max} = \frac{1}{2}(25)(1.25)(0.5) + 20(1.25) = 32.8\text{ k}$ **Ans**

b) $(V_C)_{max} = \frac{1}{2}(0.5)(10)(0.5) + \frac{1}{2}(0.5)(10)(0.5) + 0.5(20)$
$= 12.5\text{ k}$ **Ans**

c) $(M_C)_{max} = 20(5) + 0.5\left(\frac{1}{2}\right)(20)(5) = 125\text{ k}\cdot\text{ft}$ **Ans**

6–26. Draw the influence line for the tension in cable BC. Neglect the thickness of the beam. What is the maximum tension in the cable due to the 6-k loading?

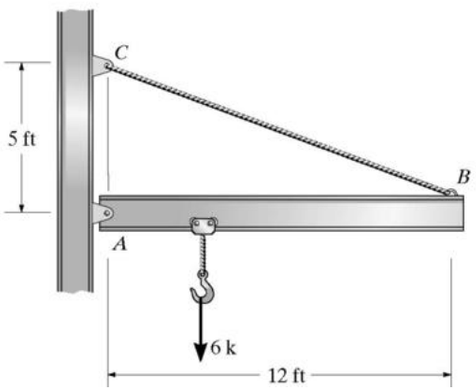

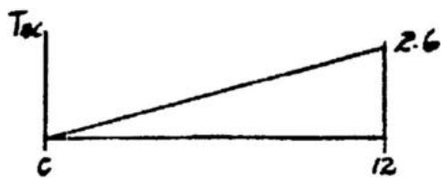

$(T_{BC})_{max} = 6(2.6) = 15.6\text{ k}$ **Ans**

6–27. The beam supports a uniform live load of 60 lb/ft and a live concentrated force of 200 lb. Determine (a) the maximum positive live moment that can be developed at B, and (b) the maximum positive live vertical reaction at D. Assume C is a pin support and D is a roller.

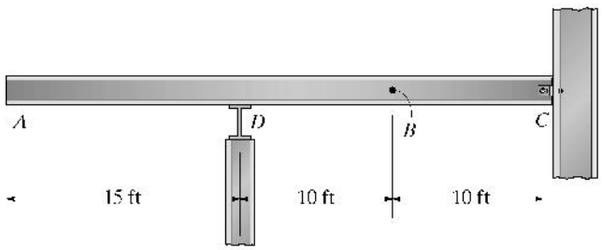

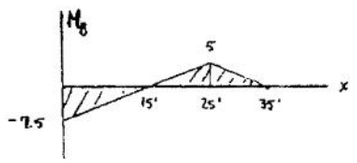

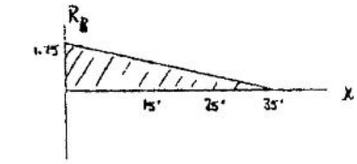

(a) $(M_B)_{max} = 5(200) + 60\left(\frac{1}{2}\right)(20)(5) = 4000\text{ lb} = 4.00\text{ k}$ **Ans**

(b) $(R_D)_{max} = \frac{1}{2}(35)(1.75)(60) + 1.75(200) = 2187.5\text{ lb} = 2.19\text{ k}$ **Ans**

www.e-kitabi.com

© 2009 by R.C. Hibbeler. Published by Pearson Prentice Hall, Pearson Education, Inc., Upper Saddle River, NJ. All rights reserved. This material is protected under all copyright laws as they currently exist. No portion of this material may be reproduced, in any form or by any means, without permission in writing from the publisher.

***6–28.** The compound beam is subjected to a uniform dead load of 1.5 kN/m and a single live load of 10 kN. Determine (a) the maximum negative moment created by these loads at A, and (b) the maximum positive shear at B. Assume A is a fixed support, B is a pin, and C is a roller.

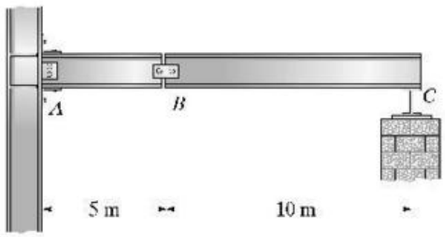

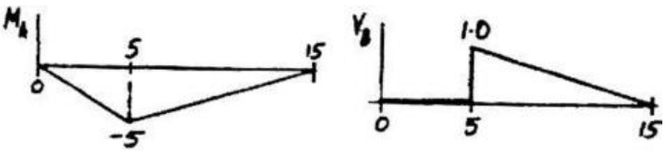

$$(M_A)_{max} = 1.5\left(\frac{1}{2}\right)(15)(-5) + 10(-5)$$
$$= -106\ \text{kN}\cdot\text{m} \qquad \textbf{Ans}$$

$$(V_B)_{max} = (1.5)\left(\frac{1}{2}\right)(10)(1) + 10(1)$$
$$= 17.5\ \text{kN} \qquad \textbf{Ans}$$

6–29. Where should a single 500-lb live load be placed on the beam so it causes the largest live moment at D? What is this moment? Assume the support at A is fixed, B is pinned, and C is a roller.

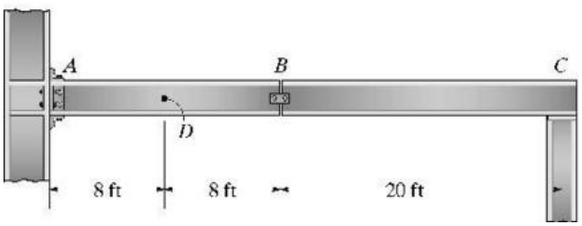

At point B: $(M_D)_{max} = 500(-8) = -4000\ \text{lb}\cdot\text{ft} = -4\ \text{k}\cdot\text{ft}$

Ans

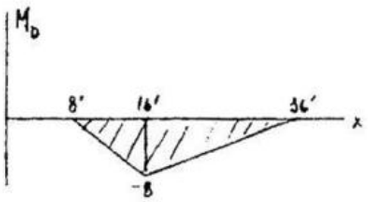

6–30. Where should the beam ABC be loaded with a 300-lb/ft uniform distributed live load so it causes (a) the largest live moment at point A and (b) the largest live shear at D? Calculate the values of the moment and shear. Assume the support at A is fixed, B is pinned and C is a roller.

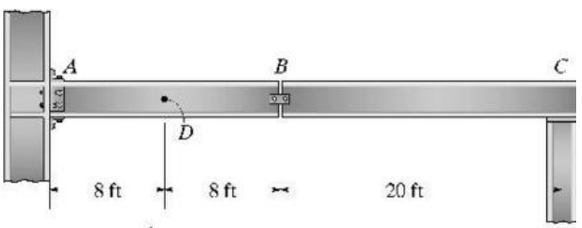

(a) $(M_A)_{max} = \frac{1}{2}(36)(-16)(0.3) = -86.4\ \text{k}\cdot\text{ft}$ Ans

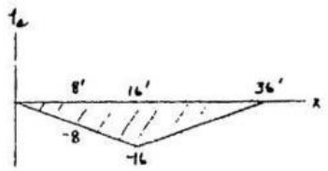

(b) $(V_D)_{max} = [(1)(8) + \frac{1}{2}(1)(20)](0.3) = 5.40\ \text{k}$ Ans

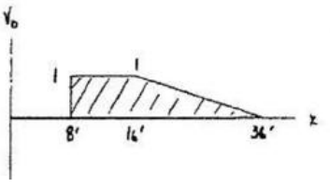

www.e-kitabi.com

c06.qxd 6/24/08 3:31 PM Page 160

© 2009 by R.C. Hibbeler. Published by Pearson Prentice Hall, Pearson Education, Inc., Upper Saddle River, NJ. All rights reserved. This material is protected under all copyright laws as they currently exist. No portion of this material may be reproduced, in any form or by any means, without permission in writing from the publisher.

6–31. Draw the influence line for (a) the shear in panel BC of the girder, and (b) the moment at B. Assume the support at B is a roller and D is a pin.

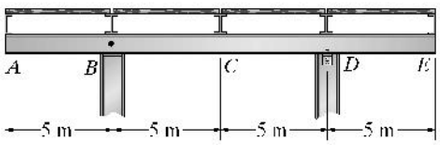

a)

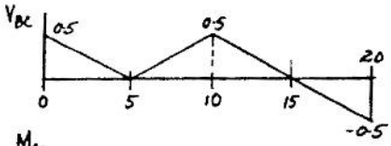

b)

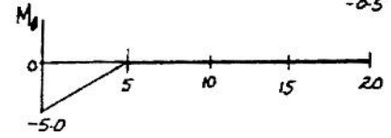

***6–32.** A uniform live load of 0.5 k/ft and a single concentrated live force of 2 k are to be placed on the floor slabs. Determine (a) the maximum positive live shear in panel DE, and (b) the maximum negative live moment at C.

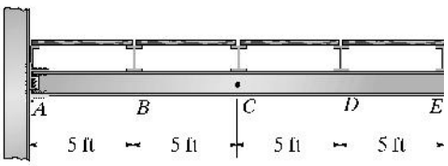

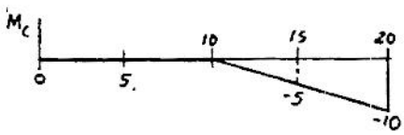

(a) $(V_{DE})_{max(+)} = (0.5)\left(\frac{1}{2}\right)(1)(5) + 2(1) = 3.25\ \text{k}$ **Ans**

(b) $(M_C)_{max(-)} = (0.5)\left(\frac{1}{2}\right)(-10)(10) + 2(-10) = -45.0\ \text{k}\cdot\text{ft}$ **Ans**

6–33. Draw the influence lines for (a) the shear in panel DE of the girder, and (b) the moment at C.

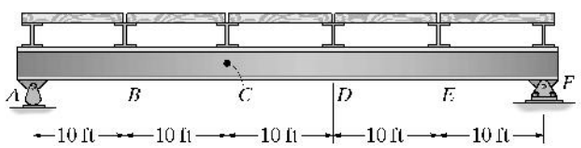

a)

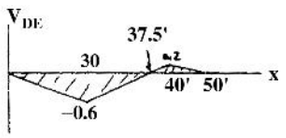

b)

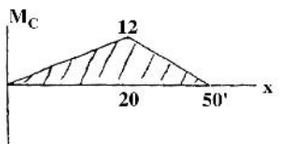

6–34. Draw the influence lines for (a) the shear in panel CD of the girder, and (b) the moment at E.

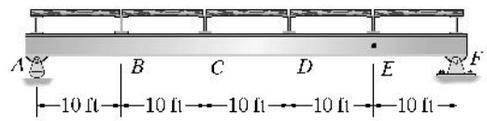

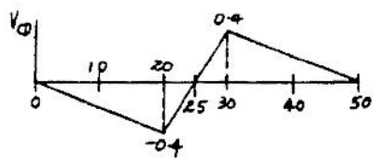

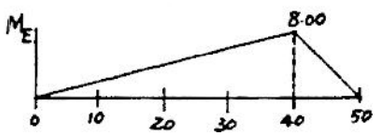

www.e-kitabi.com

© 2009 by R.C. Hibbeler. Published by Pearson Prentice Hall, Pearson Education, Inc., Upper Saddle River, NJ. All rights reserved. This material is protected under all copyright laws as they currently exist. No portion of this material may be reproduced, in any form or by any means, without permission in writing from the publisher.

6–35. A uniform live load of 0.4 k/ft and a concentrated live force of 2 k are to be placed on the floor slabs. Determine (a) the maximum live shear in panel *CD*, and (b) the maximum live moment at *B*.

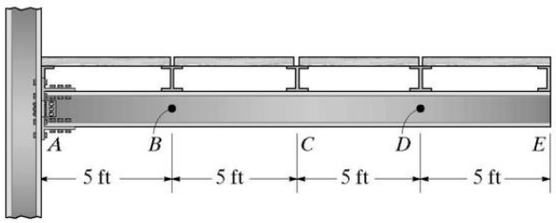

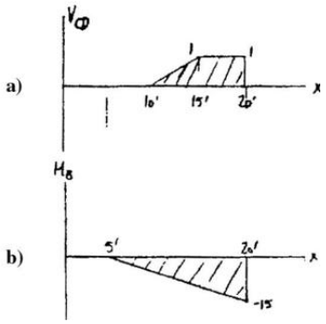

***6–36.** A uniform live load of 1.8 k/ft and a single concentrated line force of 12 k are placed on the top beams. If the beams also support a uniform dead load of 350 lb/ft, determine (a) the maximum shear in panel *BC* of the girder and (b) the maximum moment in the girder at *C*.

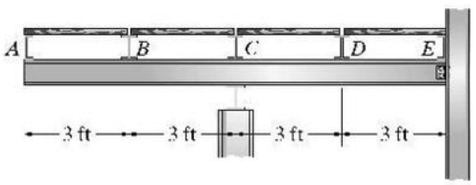

(a)

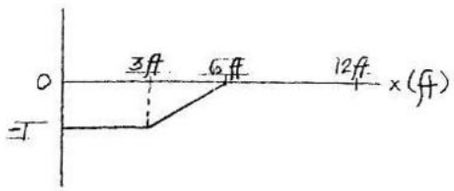

$$(V_{BC})_{max} = 12\text{ k}(-1\text{ ft}) + (1.8\text{ k/ft} + 0.350\text{ k/ft})[(-1)(3) + \tfrac{1}{2}(-1)(6-3)]$$
$$= -21.7\text{ k} \qquad \textbf{Ans}$$

(b)

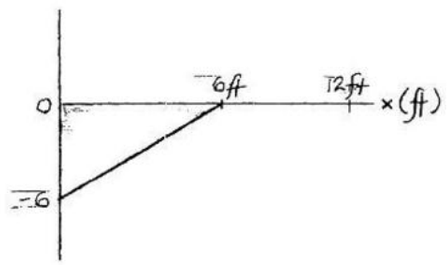

$$(M_C)_{max} = 12\text{ k}(-6\text{ ft}) + (1.8\text{ k/ft} + 0.350\text{ k/ft})[\tfrac{1}{2}(-6\text{ ft})(6\text{ ft})] = -111\text{ k}\cdot\text{ft} \qquad \textbf{Ans}$$

www.e-kitabi.com

c06.qxd 6/24/08 3:31 PM Page 162

© 2009 by R.C. Hibbeler. Published by Pearson Prentice Hall, Pearson Education, Inc., Upper Saddle River, NJ. All rights reserved. This material is protected under all copyright laws as they currently exist. No portion of this material may be reproduced, in any form or by any means, without permission in writing from the publisher.

6–37. Draw the influence line for (a) the shear in panel BC of the girder, and (b) the moment at C. Assume the support at B is a pin and D is a roller.

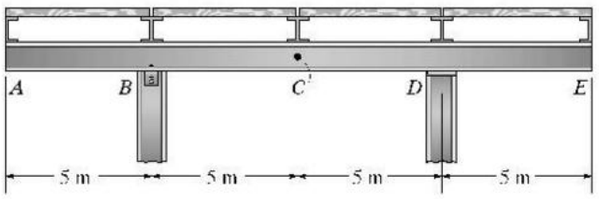

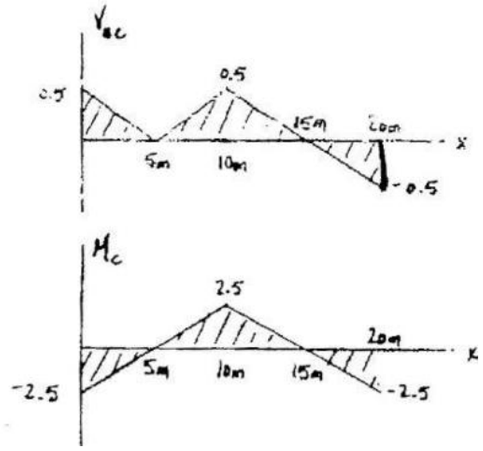

6–38. A uniform live load of 0.25 k/ft and a single concentrated live force of 3 k are to be placed on the floor slabs. Determine (a) the maximum positive live vertical reaction at the support D, (b) the maximum positive live shear in panel EF of the girder, and (c) the maximum positive live moment at F. Assume the support at D is a roller and G is a pin.

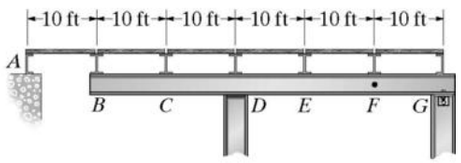

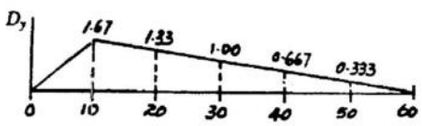

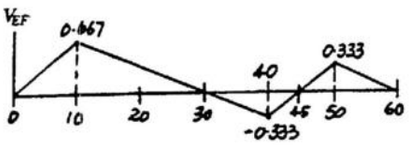

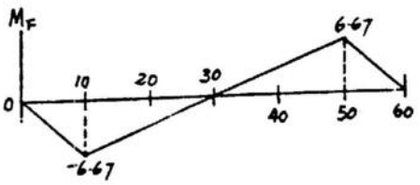

(a) $(D_y)_{max(+)} = (0.25)\left(\frac{1}{2}\right)(1.667)(60) + 3(1.667) = 17.5\ \text{k}$ **Ans**

(b) $(V_{EF})_{max(+)} = 0.25\left(\frac{1}{2}\right)(0.667)(30) + 0.25\left(\frac{1}{2}\right)(0.333)15 + 3(0.667) = 5.12\ \text{k}$ **Ans**

(c) $(M_F)_{max(-)} = (0.25)\frac{1}{2}(6.667)(30) + 3(6.667) = 45\ \text{k}\cdot\text{ft}$ **Ans**

www.e-kitabi.com

© 2009 by R.C. Hibbeler. Published by Pearson Prentice Hall, Pearson Education, Inc., Upper Saddle River, NJ. All rights reserved. This material is protected under all copyright laws as they currently exist. No portion of this material may be reproduced, in any form or by any means, without permission in writing from the publisher.

6–39. Draw the influence lines for (a) the moment at D in the girder, and (b) the shear in panel BC.

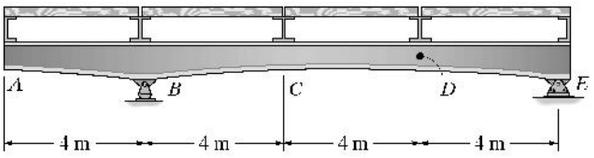

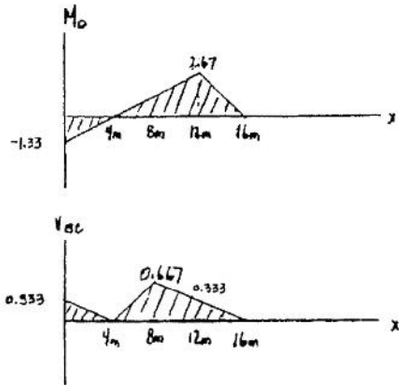

***6–40.** Draw the influence line for the moment at B in the girder. Determine the maximum positive live moment in the girder at B if a single concentrated live force of 10 k moves across the top beams. Assume the supports for these beams can exert both upward and downward forces on the beams.

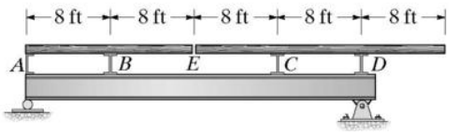

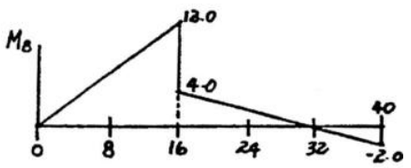

$(M_B)_{max(+)} = 10(12) = 120\,\text{k}\cdot\text{ft}$ **Ans**

6–41. Draw the influence line for the moment at F in the girder. Determine the maximum positive live moment in the girder at F if a single concentrated live force of 8 kN moves across the top floor beams. Assume the supports for all members can only exert either upward or downward forces on the members.

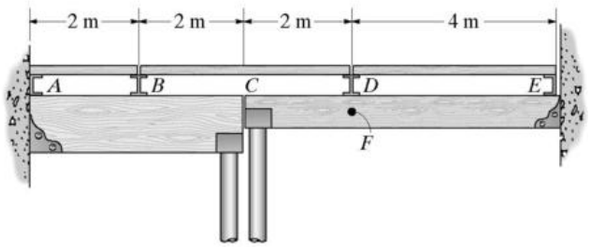

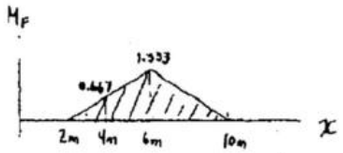

$(M_F)_{max} = 1.333(8) = 10.7\,\text{kN}\cdot\text{m}$ **Ans**

6–42. Draw the influence line for the shear in panel CD of the girder. Determine the maximum negative live shear in panel CD due to a uniform live load of 500 lb/ft acting on the top beams.

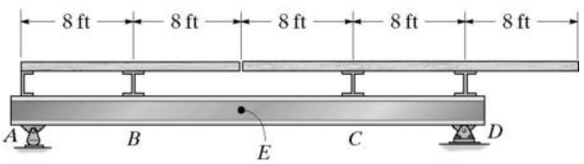

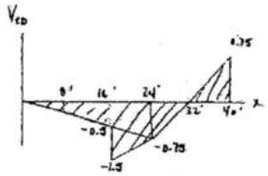

$$(V_{CD})_{max} = 500\left(\frac{1}{2}\right)(32)(-0.75) = -6\,\text{K}$$ **Ans**

www.e-kitabi.com

c06.qxd 6/24/08 3:32 PM Page 164

© 2009 by R.C. Hibbeler. Published by Pearson Prentice Hall, Pearson Education, Inc., Upper Saddle River, NJ. All rights reserved. This material is protected under all copyright laws as they currently exist. No portion of this material may be reproduced, in any form or by any means, without permission in writing from the publisher.

6–43. Draw the influence line for the moment at E in the girder. Determine the maximum positive live moment in the girder at E if a concentrated live force of 8 kip moves across the top beams.

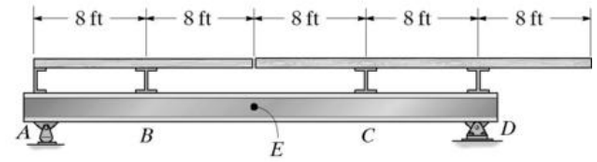

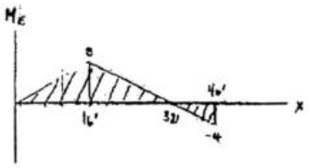

$(M_E)_{max} = (8)(8) = 64\ \text{k}\cdot\text{ft}$ **Ans**

***6–44.** A uniform live load of 0.2 k/ft and a single concentrated live force of 4 k are to be placed on the floor slabs. Determine (a) the maximum live vertical reaction at the support D, (b) the maximum live shear in panel DE of the girder, and (c) the maximum positive live moment at E. Assume D is a roller and G is a pin.

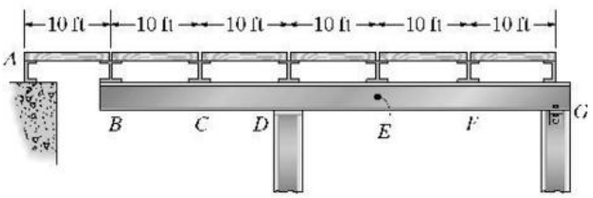

(a)

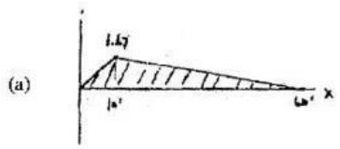

(b)

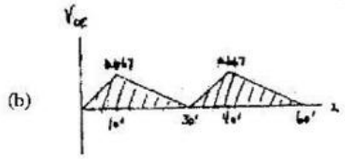

(c)

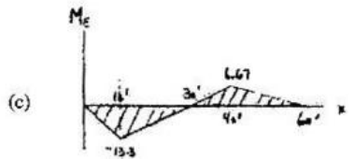

(a) $(D_y)_{max} = 1.67(4) + 60\left(\frac{1}{2}\right)(1.67)(0.2) = 16.7\ \text{k}$ **Ans**

(b) $(V_{DE})_{max} = 0.667(4) + 0.2\left(\frac{1}{2}\right)(0.667)(30)$

$+ 0.2\left(\frac{1}{2}\right)(30)(0.667) = 6.67\ \text{k}$ **Ans**

(c) $(M_E)_{max} = 4(6.67) + \frac{1}{2}(6.67)(30)(0.2) = 46.7\ \text{k}\cdot\text{ft}$ **Ans**

6–45. Draw the influence line for the force in member GF of the Warren truss. Indicate numerical values for the peaks. All members have the same length.

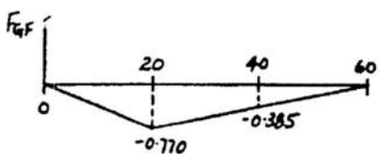

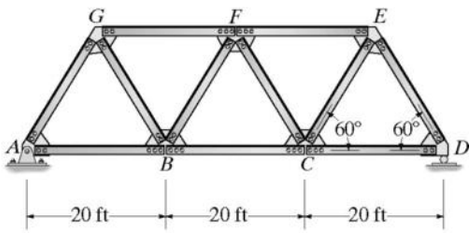

www.e-kitabi.com

© 2009 by R.C. Hibbeler. Published by Pearson Prentice Hall, Pearson Education, Inc., Upper Saddle River, NJ. All rights reserved. This material is protected under all copyright laws as they currently exist. No portion of this material may be reproduced, in any form or by any means, without permission in writing from the publisher.

6–46. Draw the influence line for the force in member *FC* of the Warren truss. Indicate numerical values for the peaks. All members have the same length.

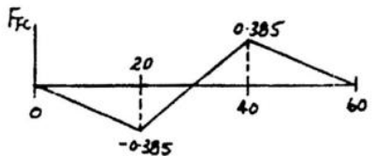

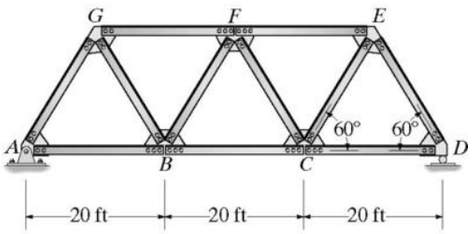

6–47. Draw the influence line for the force in member *DE* of the Warren truss. Indicate numerical values for the peaks. All members have the same length.

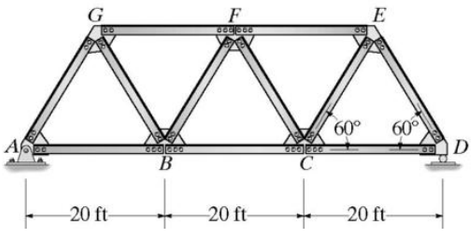

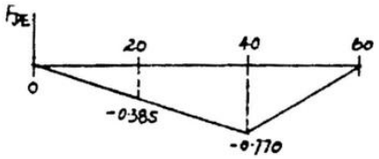

***6–48.** Draw the influence line for the force in (a) member *EH* and (b) member *JE*.

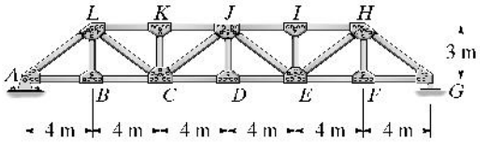

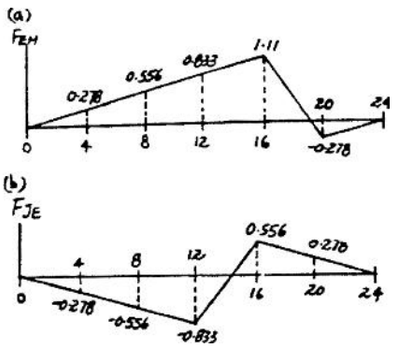

6–49. Draw the influence line for the force in member *JI*.

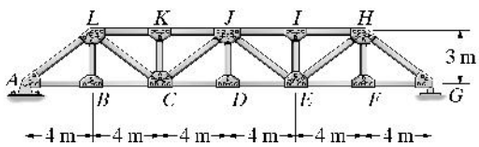

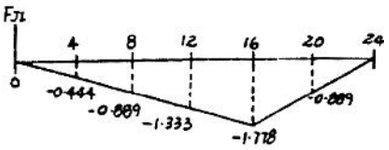

6–50. Draw the influence line for the force in member *AL*.

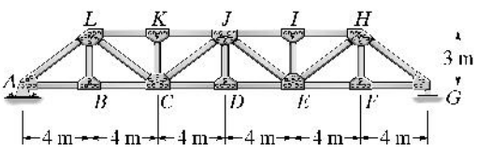

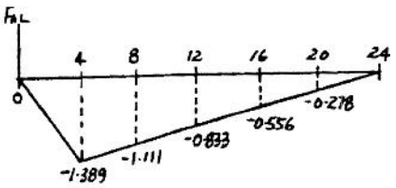

www.e-kitabi.com

c06.qxd 6/24/08 3:32 PM Page 166

© 2009 by R.C. Hibbeler. Published by Pearson Prentice Hall, Pearson Education, Inc., Upper Saddle River, NJ. All rights reserved. This material is protected under all copyright laws as they currently exist. No portion of this material may be reproduced, in any form or by any means, without permission in writing from the publisher.

6–51. Draw the influence line for the force in member *HG*, then determine the maximum live force (tension or compression) that can be developed in this member due to a uniform live load of 800 lb/ft that acts on the bridge deck along the bottom cord of the truss.

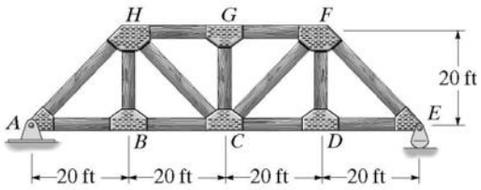

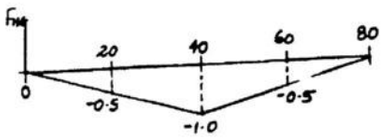

$(F_{HG})_{max(C)} = (0.8)\left(\frac{1}{2}\right)(-1.0)(80) = -32.0\,\text{k} = 32.0\,\text{k (C)}$ **Ans**

$(F_{HG})_{max(T)} = 0$ **Ans**

***6–52.** Draw the influence line for the force in member *HC*, then determine the maximum live force (tension or compression) that can be developed in this member due to a uniform live load of 800 lb/ft that acts on the bridge deck along the bottom cord of the truss.

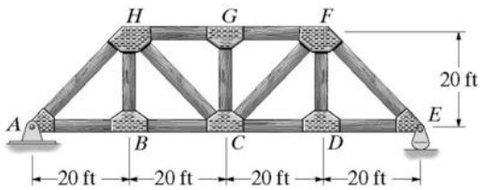

$(F_{HC})_{max(T)} = 0.8\left(\frac{1}{2}\right)(0.7071)(53.333) = 15.1\,\text{k (T)}$ **Ans**

$(F_{HC})_{max(C)} = 0.8\left(\frac{1}{2}\right)(-0.3536)(26.67) = -3.77\,\text{k} = 3.77\,\text{k (C)}$ **Ans**

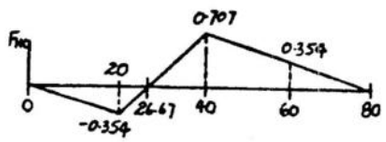

6–53. Draw the influence line for the force in member *AH*, then determine the maximum live force (tension or compression) that can be developed in this member due to a uniform live load of 800 lb/ft that acts on the bridge deck along the bottom cord of the truss.

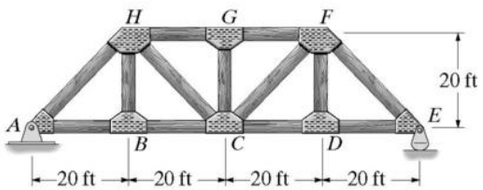

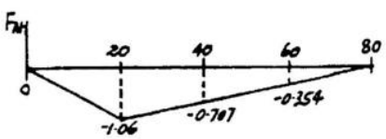

$(F_{AH})_{max(C)} = (0.8)\left(\frac{1}{2}\right)(-1.061)(80) = -33.9\,\text{k} = 33.9\,\text{k (C)}$ **Ans**

$(F_{AH})_{max(T)} = 0$ **Ans**

www.e-kitabi.com

c06.qxd 6/24/08 3:32 PM Page 167

© 2009 by R.C. Hibbeler. Published by Pearson Prentice Hall, Pearson Education, Inc., Upper Saddle River, NJ. All rights reserved. This material is protected under all copyright laws as they currently exist. No portion of this material may be reproduced, in any form or by any means, without permission in writing from the publisher.

6–54. Draw the influence line for the force in member *RN* of the Baltimore truss.

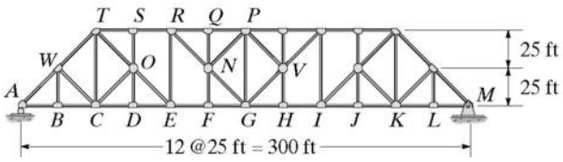

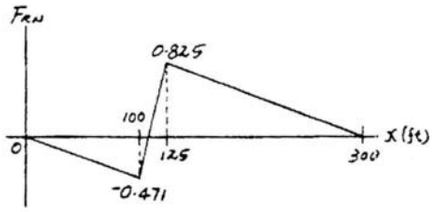

6–55. Draw the influence line for the force in member *NG* of the Baltimore truss.

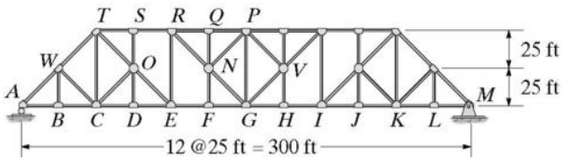

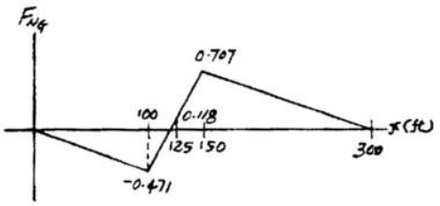

***6–56.** Draw the influence line for the force in member *CO* of the Baltimore truss.

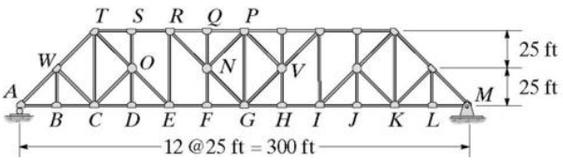

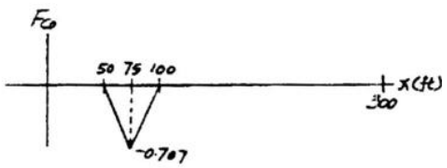

6–57. The roof truss serves to support a crane rail which is attached to the bottom cord of the truss as shown. Determine the maximum live force (tension or compression) that can be developed in member *GF*, due to the crane load of 15 k. Specify the position x of the load. Assume the truss is supported at *A* by a pin and at *E* by a roller. Also, assume all members are sectioned and pin-connected at the gusset plates.

$x = 24$ ft **Ans**

$(F_{GF})_{max} = (15)(-1.118) = 16.8$ k (C) **Ans**

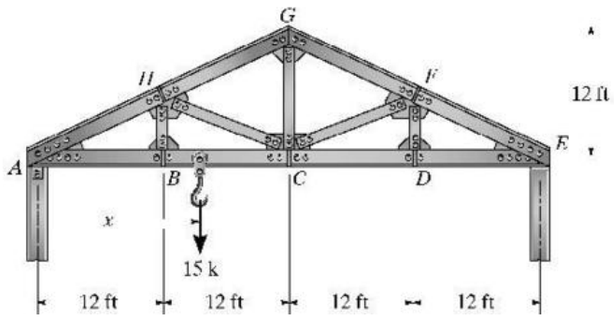

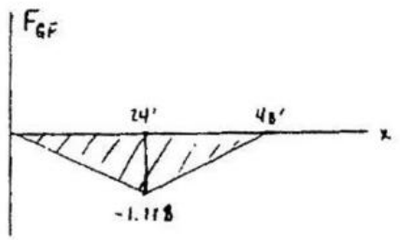

www.e-kitabi.com

c06.qxd 6/24/08 3:32 PM Page 168

© 2009 by R.C. Hibbeler. Published by Pearson Prentice Hall, Pearson Education, Inc., Upper Saddle River, NJ. All rights reserved. This material is protected under all copyright laws as they currently exist. No portion of this material may be reproduced, in any form or by any means, without permission in writing from the publisher.

6–58. Determine the maximum live moment at point C on the single girder caused by the moving dolly that has a mass of 2 Mg and a mass center at G. Assume A is a roller.

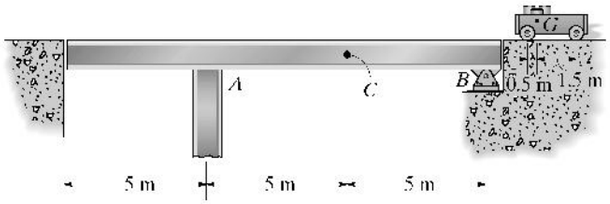

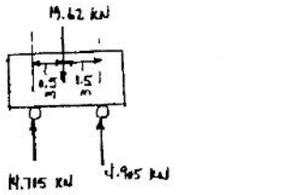

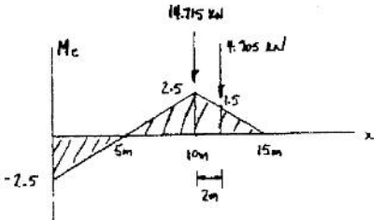

$$(M_C)_{max} = 14.715(2.5) + 4.905(1.5) = 44.1 \text{ kN.m}$$ **Ans**

6–59. The 12-k truck exerts the wheel reactions shown on the deck of a girder bridge. Determine (a) the largest live shear it creates in the splice joint at C, and (b) the largest moment it exerts at the splice. Assume the truck travels in *either direction* along the *center* of the deck, and therefore transfers *half* of its load to each of the two side girder. Assume the splice is a fixed connection and, like the girder, it can support both shear and moment.

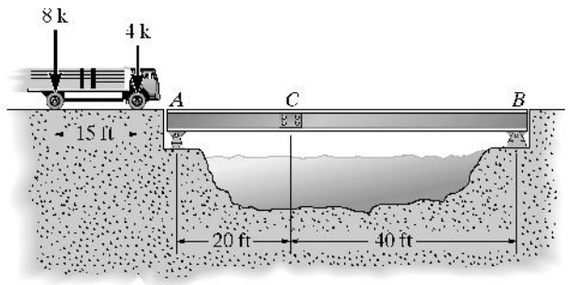

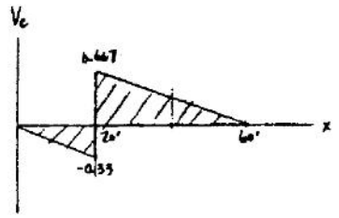

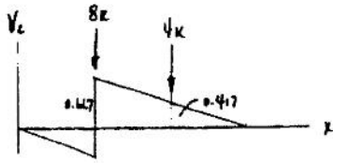

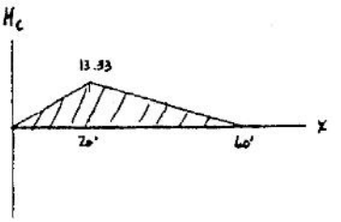

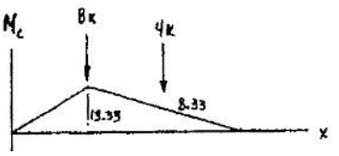

(a) $$(V_C)_{max} = \frac{8(0.667) + 4(0.417)}{2} = 3.50 \text{ k}$$ **Ans**

(b) $$(M_C)_{max} = \frac{8(13.33) + 4(8.33)}{2} = 70 \text{ k·ft}$$ **Ans**

www.e-kitabi.com

c06.qxd 6/24/08 3:32 PM Page 169

© 2009 by R.C. Hibbeler. Published by Pearson Prentice Hall, Pearson Education, Inc., Upper Saddle River, NJ. All rights reserved. This material is protected under all copyright laws as they currently exist. No portion of this material may be reproduced, in any form or by any means, without permission in writing from the publisher.

***6–60.** The 9-k truck exerts the wheel reactions shown on the deck of a girder bridge. Determine (a) the largest live shear it creates in the splice at C, and (b) the largest moment it exerts in the splice. Assume the truck travels in *either direction* along the *center* of the deck, and therefore transfers *half* of the load shown to each of the two side girders. Assume the splice is a fixed connection and, like the girder, can support both shear and moment.

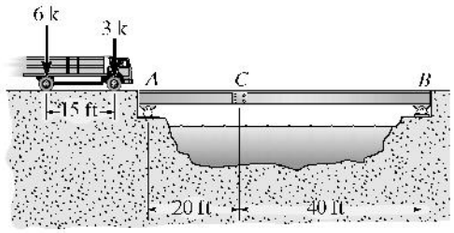

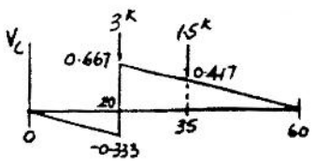

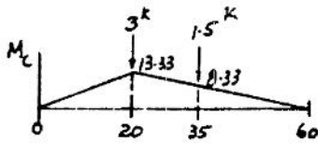

(a) $(V_C)_{max} = 3(0.6667) + 1.5(0.4167) = 2.62\ \text{k}$ **Ans**

(b) $(M_C)_{max} = 3(13.33) + 1.5(8.333) = 52.5\ \text{k} \cdot \text{ft}$ **Ans**

6–61. Determine the maximum live moment at point C on the bridge caused by the moving load.

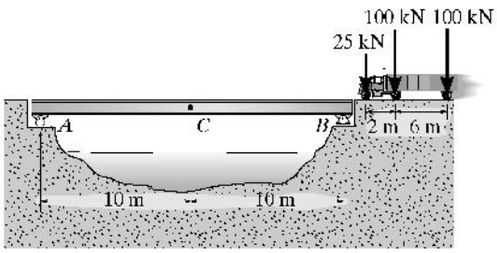

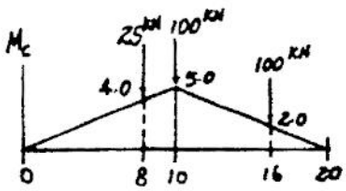

$(M_C)_{max} = 25(4.0) + 100(5.0) + 100(2.0) = 800\ \text{kN} \cdot \text{m}$ **Ans**

www.e-kitabi.com

© 2009 by R.C. Hibbeler. Published by Pearson Prentice Hall, Pearson Education, Inc., Upper Saddle River, NJ. All rights reserved. This material is protected under all copyright laws as they currently exist. No portion of this material may be reproduced, in any form or by any means, without permission in writing from the publisher.

6–62. The car has a weight of 4200 lb and a center of gravity at G. Determine the maximum live moment created in the side girder at C as it crosses the bridge. Assume the car can travel in either direction along the *center* of the deck, so that *half* its load is transferred to each of the two side girders.

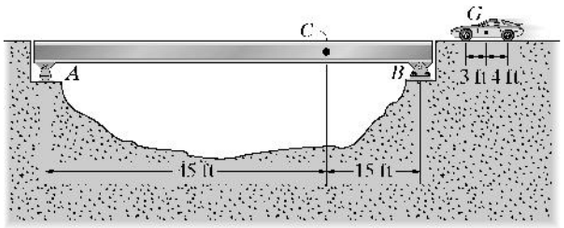

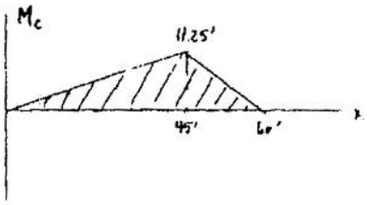

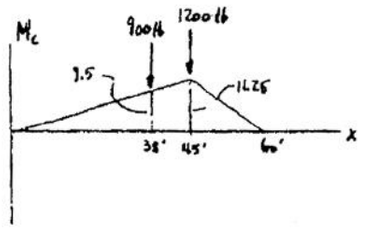

$(M_C)_{max} = 1200(11.25) + 900(9.5) = 22{,}050 \text{ lb.ft} = 22.0 \text{ k·ft}$ **Ans**

6–63. Draw the influence line for the force in member III of the bridge truss. Determine the maximum live force (tension or compression) that can be developed in this member due to a 18.5-k truck having the wheel loads shown. Assume the truck can travel in *either direction* along the *center* of the deck, so that *half* the load shown is transferred to each of the two side trusses. Also assume the members are pin connected at the gusset plates.

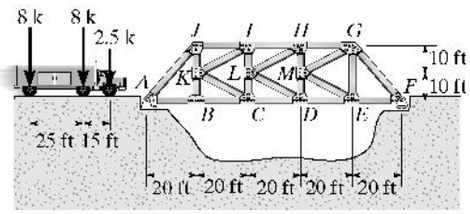

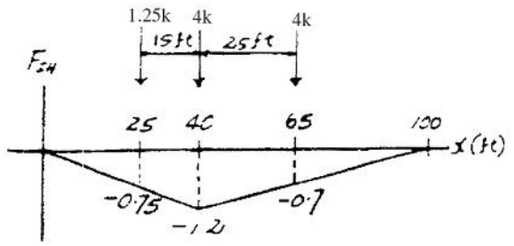

$(F_{IH})_{max} = 2.5(-0.75) + 8(-1.2) + 8(-0.7) = -17.1 \text{ k} = 17.1 \text{ k (C)}$ **Ans**

***6–64.** Draw the influence line for the force in member CD of the bridge truss. Determine the maximum live force (tension or compression) that can be developed in this member due to a 18.5-k truck having the wheel loads shown. Assume the truck can travel in *either direction* along the *center* of the deck, so that *half* the load shown is transferred to each of the two side trusses. Also assume the members are pin connected at the gusset plates.

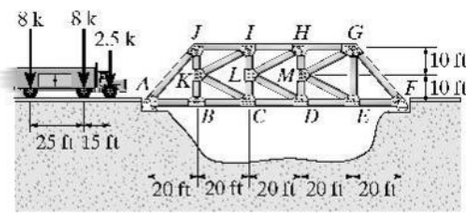

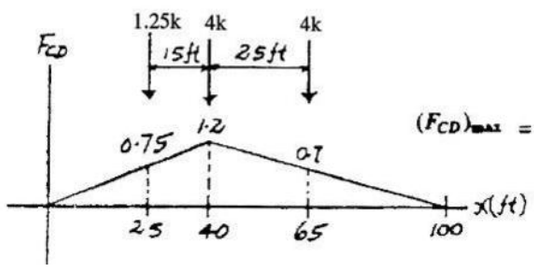

$(F_{CD})_{max} = 2.5(0.75) + 8(1.2) + 8(0.7) = 17.1 \text{ k (T)}$ **Ans**

www.e-kitabi.com

c06.qxd 6/24/08 3:32 PM Page 171

© 2009 by R.C. Hibbeler. Published by Pearson Prentice Hall, Pearson Education, Inc., Upper Saddle River, NJ. All rights reserved. This material is protected under all copyright laws as they currently exist. No portion of this material may be reproduced, in any form or by any means, without permission in writing from the publisher.

6–65. Draw the influence line for the force in member *BC* of the bridge truss. Determine the maximum live force (tension or compression) that can be developed in this member due to the 18.5-k truck having the wheel loads shown. Assume the truck can travel in *either direction* along the *center* of the deck, so that *half* the load shown is transferred to each of the two side trusses. Also assume the members are pin connected at the gusset plates.

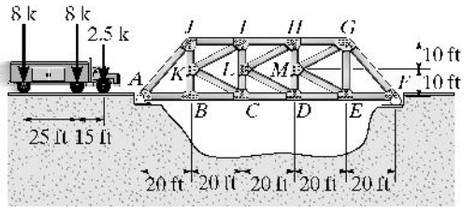

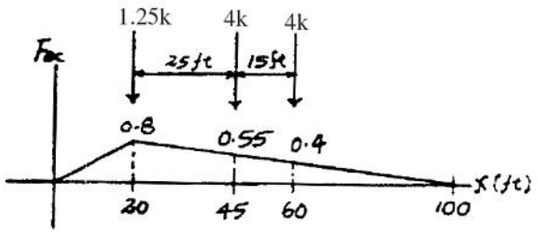

$(F_{BC})_{max} = 8(0.8) + 8(0.55) + 2.5(0.4) = 11.8\ \text{k (T)}$ **Ans**

6–66. Determine the distance a of the overhang of the beam in order that the moving loads produce the same maximum moment at the supports as in the center of the span. Assume A is a pin and B is a roller.

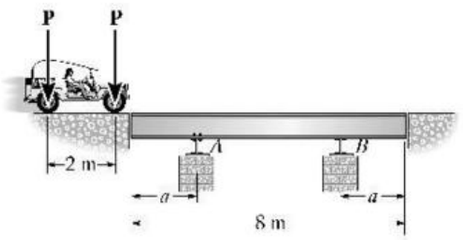

For Support A

$M_{max} = P(a) + P(a-2)$

$= 2P(a-1)$

For the center

$\frac{a/2}{a} = \frac{h}{\frac{8-2a}{2}-1}$

$\frac{1}{2} = (\frac{h}{3-a})$

$h = \frac{3-a}{2}$

$M_{max} = P(3-a)$

Require

$2P(a-1) = P(3-a)$

$2a - 2 = 3 - a$

$3a = 5$

$a = 1.67$ m **Ans**

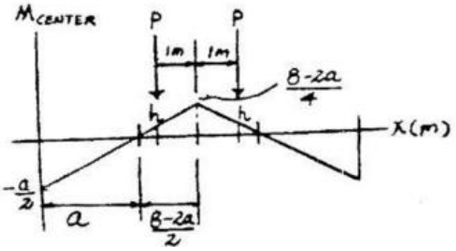

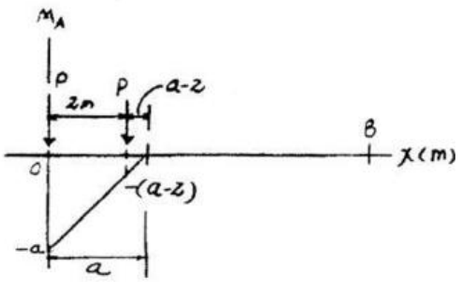

www.e-kitabi.com

c06.qxd 6/24/08 3:32 PM Page 172

© 2009 by R.C. Hibbeler. Published by Pearson Prentice Hall, Pearson Education, Inc., Upper Saddle River, NJ. All rights reserved. This material is protected under all copyright laws as they currently exist. No portion of this material may be reproduced, in any form or by any means, without permission in writing from the publisher.

6–67. Draw the influence line for the force in member *IH* of the bridge truss. Compute the maximum live force (tension or compression) that can be developed in the member due to a 5-k truck having the wheel loads shown. Assume the truck can travel in *either direction* along the *center* of the deck, so that half the load shown is transferred to each of the two side trusses. Also assume the members are pin connected at the gusset plates.

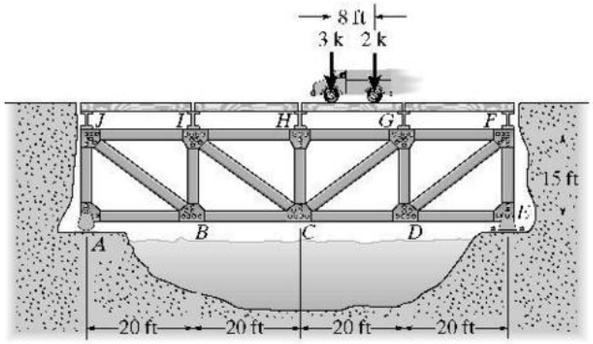

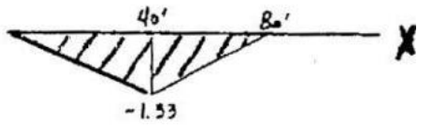

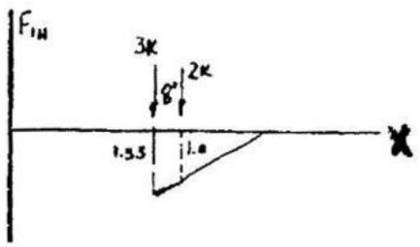

$$(F_{IH})_{max} = \frac{3(1.33) + 2(1.00)}{2} = 3.00 \text{ k (C)}$$ **Ans**

***6–68.** Determine the maximum live moment at *C* caused by the moving loads.

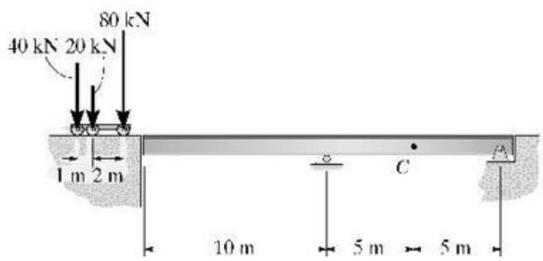

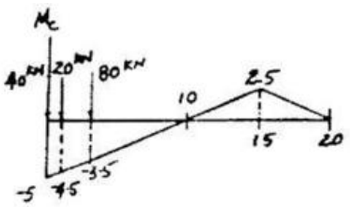

$$(M_C)_{max} = (40)(-5) + 20(-4.5) + 80(-3.5) = -570 \text{ kN} \cdot \text{m}$$ **Ans**

6–69. Determine the maximum live shear at *C* caused by the moving loads.

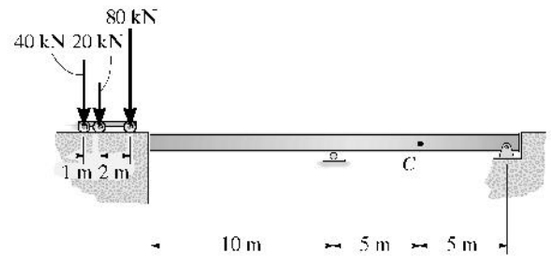

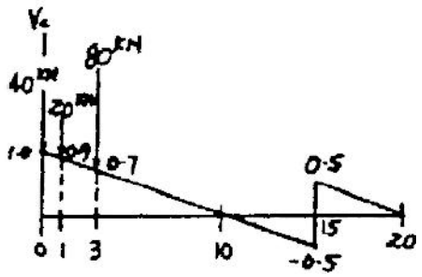

$$(V_C)_{max} = (40)(1) + 20(0.9) + 80(0.7) = 114 \text{ kN}$$ **Ans**

www.e-kitabi.com

© 2009 by R.C. Hibbeler. Published by Pearson Prentice Hall, Pearson Education, Inc., Upper Saddle River, NJ. All rights reserved. This material is protected under all copyright laws as they currently exist. No portion of this material may be reproduced, in any form or by any means, without permission in writing from the publisher.

6–70. Determine the maximum live moment at C caused by the moving loads.

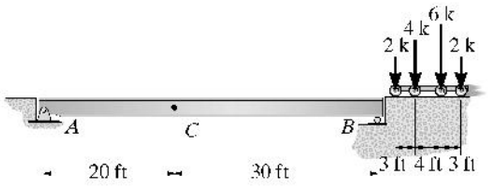

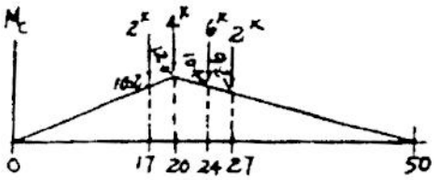

The worst case is

$$(M_C)_{max} = 2(10.2) + 4(12.0) + 6(10.4) + 2(9.2) = 149\ \text{k}\cdot\text{ft} \qquad \textbf{Ans}$$

6–71. Determine the maximum live shear at C caused by the moving loads.

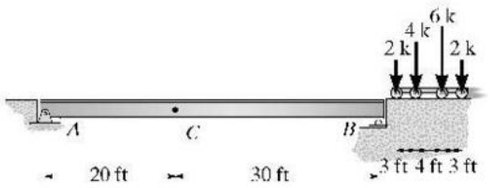

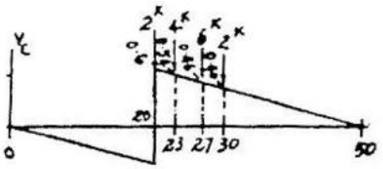

$$(V_C)_{max} = 2(0.6) + 4(0.54) + 6(0.46) + 2(0.4)$$

$$= 6.92\ \text{k} \qquad \textbf{Ans}$$

***6–72.** Determine the absolute maximum live shear and absolute maximum live moment in the jib beam AB due to the 10-kN loading. The end constraints require $0.1\ \text{m} \le x \le 3.9\ \text{m}$.

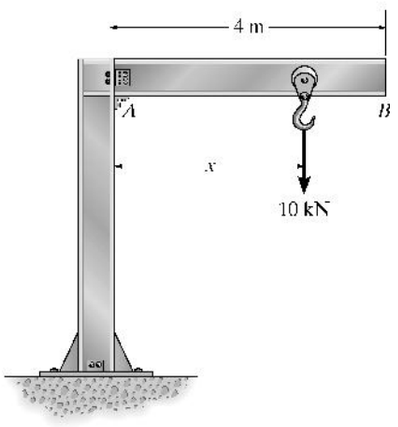

Abs. max. shear occurs when $0.1 \le x \le 3.9$ m

$V_{max} = 10$ kN **Ans**

Abs. max. moment occurs when $x = 3.9$ m

$M_{max} = -10(3.9) = -39\ \text{kN}\cdot\text{m}$ **Ans**

www.e-kitabi.com

© 2009 by R.C. Hibbeler. Published by Pearson Prentice Hall, Pearson Education, Inc., Upper Saddle River, NJ. All rights reserved. This material is protected under all copyright laws as they currently exist. No portion of this material may be reproduced, in any form or by any means, without permission in writing from the publisher.

6–73. Determine the absolute maximum live moment in the girder bridge due to the truck loading shown. The load is applied directly to the girder.

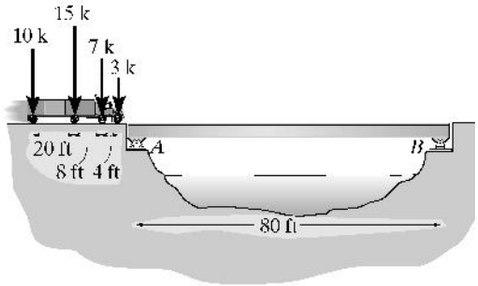

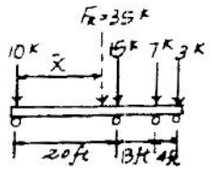

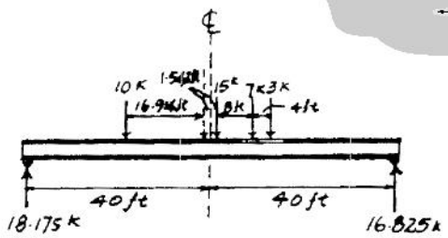

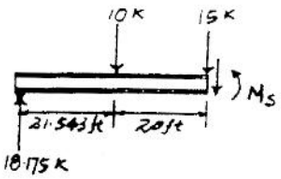

$$\bar{x} = \frac{15(20) + 7(28) + 3(32)}{35} = 16.914 \text{ ft}$$

$$\zeta + \Sigma M_S = 0; \quad M_S + 10(20) - 18.175(41.543) = 0$$

$$M_S = 555 \text{ k} \cdot \text{ft} \qquad \textbf{Ans}$$

6–74. Determine the absolute maximum live moment in the girder bridge due to the loading shown. The load is applied directly to the girder.

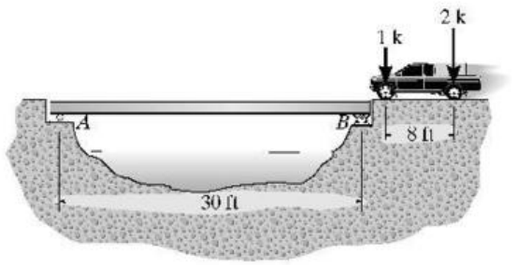

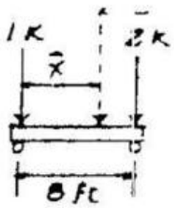

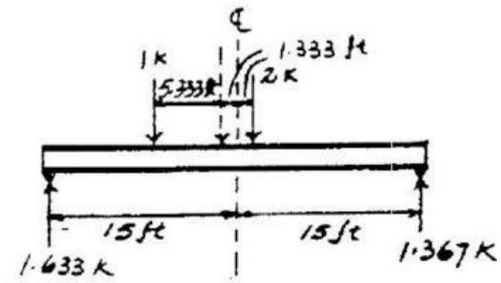

$$\bar{x} = \frac{2(8)}{3} = 5.333 \text{ ft}$$

$$\zeta + \Sigma M_S = 0; \quad -M_S + 1.367(13.667) = 0$$

$$M_S = 18.7 \text{ k} \cdot \text{ft} \qquad \textbf{Ans}$$

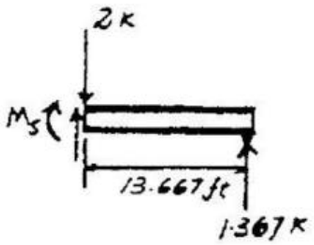

www.e-kitabi.com

© 2009 by R.C. Hibbeler. Published by Pearson Prentice Hall, Pearson Education, Inc., Upper Saddle River, NJ. All rights reserved. This material is protected under all copyright laws as they currently exist. No portion of this material may be reproduced, in any form or by any means, without permission in writing from the publisher.

6–75. Determine the absolute maximum live moment in the bridge due to the truck loading shown.

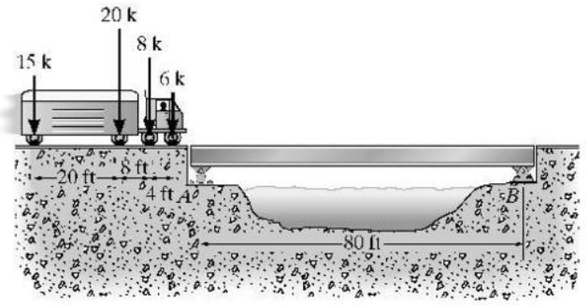

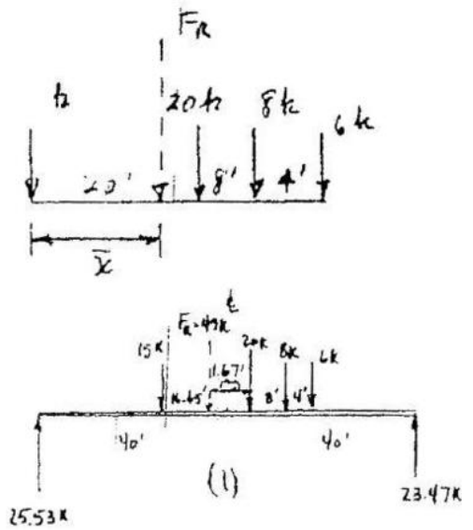

$F_R = 15 + 20 + 8 + 6 = 49$ kN

$$\bar{x} = \frac{20(20) + 8(28) + 6(32)}{49} = 16.65 \text{ ft}$$

Placement of load on bridge is shown in FBD (1).

From the segment (2):

$M_{max} = 8(8) + 6(12) - 23.46(38.33) = 764$ k·ft **Ans**

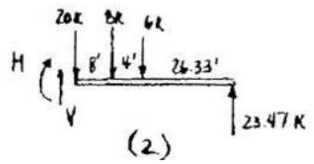

***6–76.** The maximum wheel loadings for the wheels of a crane that is used in an industrial building are given. The crane travels along the runway girders that are simply supported on columns. Determine (a) the absolute maximum shear in an intermediate girder AB, and (b) the absolute maximum moment in the girder.

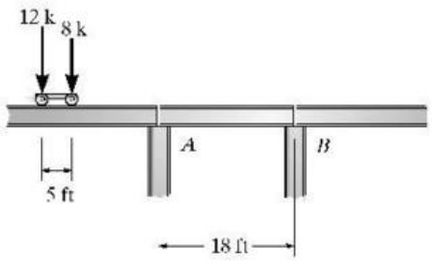

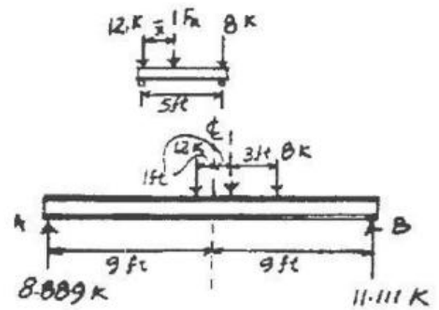

(a) The absolute maximum shear occurs at a point near the support A.

$V_S = 12(1.0) + 8(0.7222) = 17.8$ k **Ans**

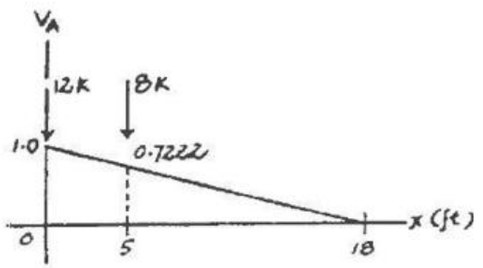

(b) $F_R = 12 + 8 = 20$ kN

$$\bar{x} = \frac{12(0) + 8(5)}{20} = 2 \text{ ft}$$

$$\left(+\Sigma M_S = 0; \quad -8.889(8) + M_S = 0\right)$$

$M_S = 71.1$ k· ft **Ans**

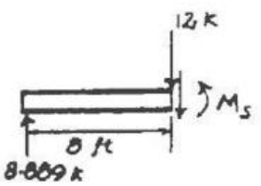

www.e-kitabi.com

c06.qxd 6/24/08 3:32 PM Page 176

© 2009 by R.C. Hibbeler. Published by Pearson Prentice Hall, Pearson Education, Inc., Upper Saddle River, NJ. All rights reserved. This material is protected under all copyright laws as they currently exist. No portion of this material may be reproduced, in any form or by any means, without permission in writing from the publisher.

6–77. Determine the absolute maximum live moment in the girder due to the loading shown.

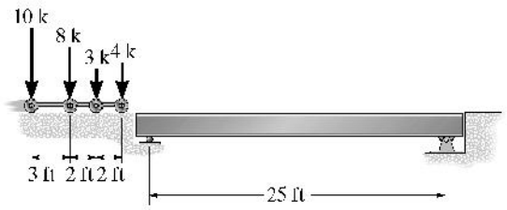

$$\bar{x} = \frac{8(3) + 3(5) + 4(7)}{25} = 2.68 \text{ ft}$$

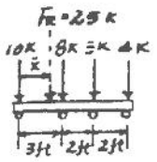

Case I

$$\zeta + \Sigma M_S = 0; \qquad M_S + 10(3) - (12.66)(12.66) = 0$$

$$M_S = 130 \text{ k} \cdot \text{ft} \qquad \text{Ans}$$

Case II

$$\zeta + \Sigma M_S = 0; \qquad M_S - 11.16(11.16) = 0$$

$$M_S = 124.5 \text{ k} \cdot \text{ft}$$

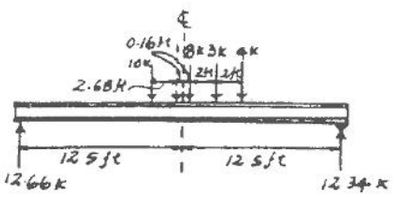

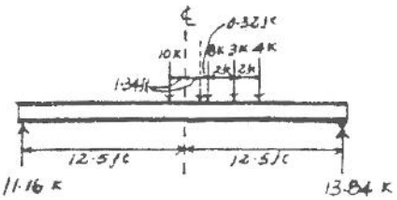

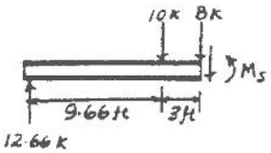

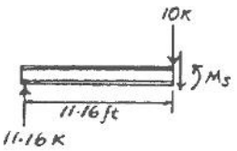

www.e-kitabi.com

c06.qxd 6/24/08 3:32 PM Page 177

© 2009 by R.C. Hibbeler. Published by Pearson Prentice Hall, Pearson Education, Inc., Upper Saddle River, NJ. All rights reserved. This material is protected under all copyright laws as they currently exist. No portion of this material may be reproduced, in any form or by any means, without permission in writing from the publisher.

6–1P. The chain hoist on the wall crane can be placed anywhere along the boom (0.1 m $<$ x $<$ 3.4 m) and has a rated capacity of 28 kN. Use an impact factor of 0.3 and determine the absolute maximum bending moment in the boom and the maximum force developed in the tie rod BC. The boom is pinned to the wall column at its left end A. Neglect the size of the trolley at D.

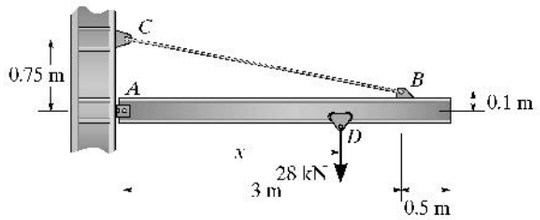

Absolute maximum moment occurs when the trolley is at $x = 1.5$ m.

Load $= 28 + 0.3(28) = 36.4$ kN

$+\Sigma M_A = 0;\ T \sin 12.23°(3) + T \cos 12.23°(0.1) - 36.4(1.5) = 0$

$T = 74.49$ kN

$+\uparrow \Sigma F_y = 0;\ A_y - 36.4 + 74.49 \sin 12.23° = 0$

$A_y = 20.63$ kN

$+\Sigma M_S = 0;\ M_S - 20.63(1.5) = 0$

$M_S = 30.9$ kN · m **Ans**

Absolute maximum tension occurs in the tie rod when trolley is at $x = 3.4$ m.

$+\Sigma M_A = 0;\ T_{max} \sin 12.23°(3) + T_{max} \cos 12.23°(0.1) - 36.4(3.4) = 0$

$T_{max} = 169$ kN **Ans**

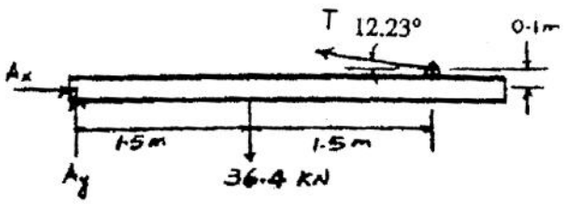

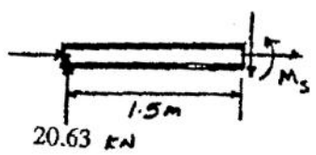

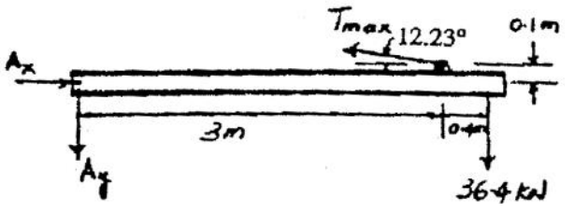

www.e-kitabi.com

c06.qxd 6/24/08 3:32 PM Page 178

© 2009 by R.C. Hibbeler. Published by Pearson Prentice Hall, Pearson Education, Inc., Upper Saddle River, NJ. All rights reserved. This material is protected under all copyright laws as they currently exist. No portion of this material may be reproduced, in any form or by any means, without permission in writing from the publisher.

6–2P. A simply supported pedestrian bridge is to be constructed in a city park and two designs have been proposed as shown in case *a* and case *b*. The truss members are to be made from timber. The deck consists of 1.5-m-long planks that have a mass of 20 kg/m^2. A local code states the live load on the deck is required to be 5 kPa with an impact factor of 0.2. Consider the deck to be simply supported on stringers. Floor beams then transmit the load to the bottom joints of the truss. (See Fig. 6–23.) In each case find the member subjected to the largest tension and largest compression load and suggest why you would choose one design over the other. Neglect the weights of the truss members.

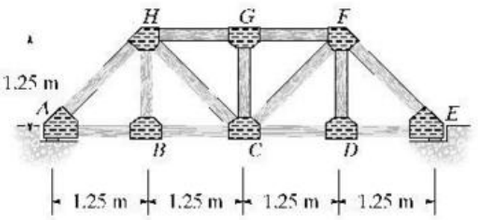

case *a*

Dead load

$w_d = 20(9.81)(1.5) = 294.3$ N/m

Live load

$w_l = 5000(1 + 0.2)(1.5) = 9000$ N/m

For each truss :

$w_d' = \frac{294.3}{2} = 147.15$ N/m

$w_l' = 4500$ N/m

case *a*

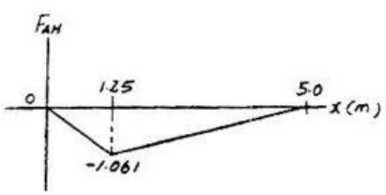

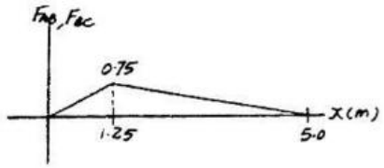

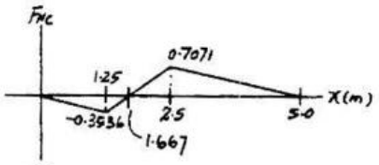

Case a :

Largest compression members are *AH* or *EF*.

$F_{AH} = F_{EF} = (147.15 + 4500)(\frac{1}{2})(1.061)(5) = 12.3$ kN(C) **Ans**

Largest tension members are *AB*, *BC*, *CD*, *DE*.

$F_{AB} = F_{BC} = F_{CD} = F_{DE} = (147.15 + 4500)(\frac{1}{2})(0.75)(5) = 8.71$ kN(T) **Ans**

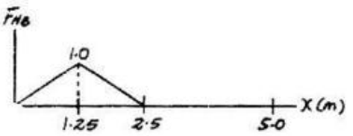

Case b :

Largest compression members are *AH* and *EF*.

$F_{AH} = F_{EF} = (147.15 + 4500)(\frac{1}{2})(1.061)(5) = 12.3$ kN(C) **Ans**

Largest tension members are *BC* and *CD*.

$F_{BC} = F_{CD} = (147.15 + 4500)(\frac{1}{2})(1.0)(5) = 11.6$ kN(T) **Ans**

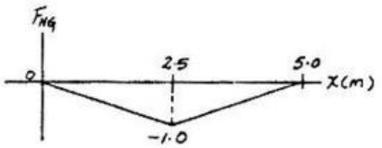

Choose case a to avoid the larger tension forces in member *BC* and *CD*. In timber construction, the of joints subjected to large tension should be avoided.

case *b*

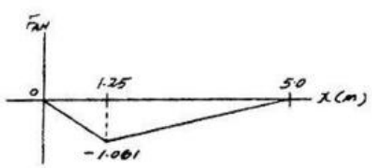

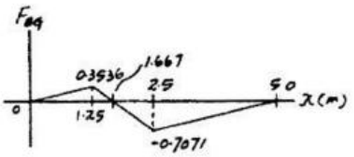

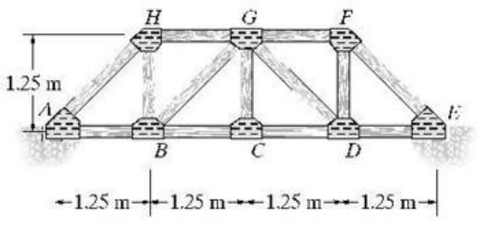

case *b*

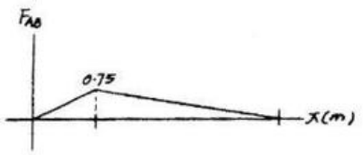

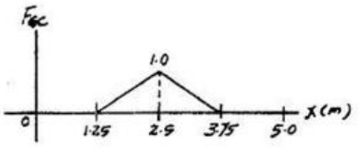

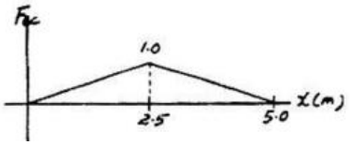

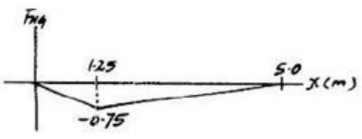

www.e-kitabi.com

c07.qxd 6/24/08 3:46 PM Page 179

© 2009 by R.C. Hibbeler. Published by Pearson Prentice Hall, Pearson Education, Inc., Upper Saddle River, NJ. All rights reserved. This material is protected under all copyright laws as they currently exist. No portion of this material may be reproduced, in any form or by any means, without permission in writing from the publisher.

7–1. Determine (approximately) the force in each member of the truss. Assume the diagonals can support both tensile and compressive forces.

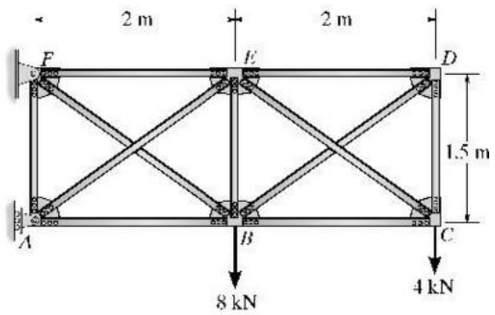

Assume $F_{BD} = F_{EC}$

$+\uparrow \Sigma F_y = 0;\quad 2F_{EC}\left(\frac{1.5}{2.5}\right) - 4 = 0$

$F_{EC} = 3.333\ \text{kN} = 3.33\ \text{kN (T)}$ **Ans**

$F_{BD} = 3.333\ \text{kN} = 3.33\ \text{kN (C)}$ **Ans**

$\zeta + \Sigma M_C = 0;\quad F_{ED}(1.5) - \left(\frac{2}{2.5}\right)(3.333)(1.5) = 0$

$F_{ED} = 2.67\ \text{kN (T)}$ **Ans**

$\stackrel{+}{\rightarrow} \Sigma F_x = 0;\quad F_{BC} = 2.67\ \text{kN (C)}$ **Ans**

Joint C:

$+\uparrow \Sigma F_y = 0;\quad F_{CD} + 3.333\left(\frac{1.5}{2.5}\right) - 4 = 0$

$F_{CD} = 2.00\ \text{kN (T)}$ **Ans**

Assume $F_{FB} = F_{AE}$

$+\uparrow \Sigma F_y = 0;\quad 2F_{FB}\left(\frac{1.5}{2.5}\right) - 8 - 4 = 0$

$F_{FB} = 10.0\ \text{kN (T)}$ **Ans**

$F_{AE} = 10.0\ \text{kN (C)}$ **Ans**

$\zeta + \Sigma M_B = 0;\quad F_{FE}(1.5) - 10.0\left(\frac{2}{2.5}\right)(1.5) - 4(2) = 0$

$F_{FE} = 13.3\ \text{kN (T)}$ **Ans**

$\stackrel{+}{\rightarrow} \Sigma F_x = 0;\quad F_{AB} = 13.3\ \text{kN (C)}$ **Ans**

Joint B:

$+\uparrow \Sigma F_y = 0;\quad F_{BE} + 10.0\left(\frac{1.5}{2.5}\right) - 3.333\left(\frac{1.5}{2.5}\right) - 8 = 0$

$F_{BE} = 4.00\ \text{kN (T)}$ **Ans**

Joint A:

$+\uparrow \Sigma F_y = 0;\quad F_{AF} - 10.0\left(\frac{1.5}{2.5}\right) = 0$

$F_{AF} = 6.00\ \text{kN (T)}$ **Ans**

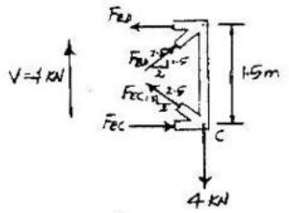

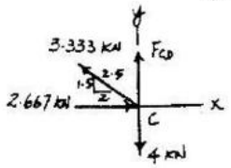

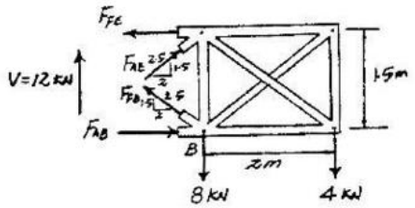

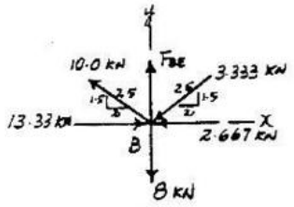

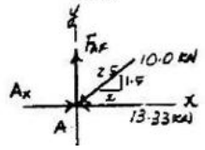

www.e-kitabi.com

c07.qxd 6/24/08 3:46 PM Page 180

© 2009 by R.C. Hibbeler. Published by Pearson Prentice Hall, Pearson Education, Inc., Upper Saddle River, NJ. All rights reserved. This material is protected under all copyright laws as they currently exist. No portion of this material may be reproduced, in any form or by any means, without permission in writing from the publisher.

7–2. Determine (approximately) the force in each member of the truss. Assume the diagonals cannot support a compressive force.

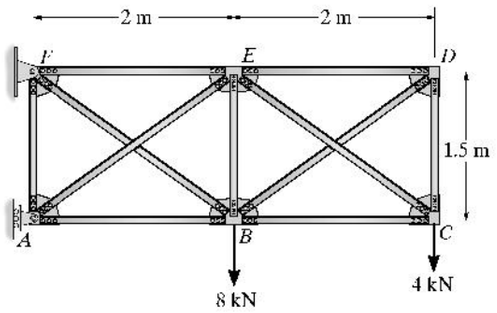

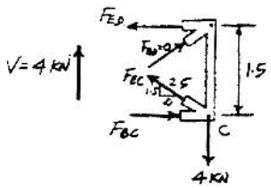

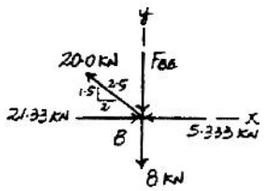

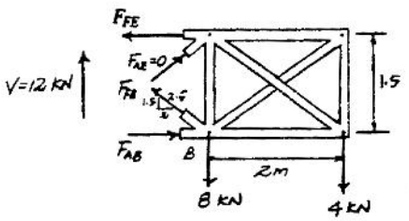

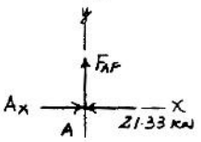

Assume $F_{BD} = 0$ **Ans**

$+\uparrow \Sigma F_y = 0;$ $F_{EC}\left(\frac{1.5}{2.5}\right) - 4 = 0$

$F_{EC} = 6.667\ \text{kN} = 6.67\ \text{kN (T)}$ **Ans**

$\zeta + \Sigma M_C = 0;$ $F_{ED} = 0$ **Ans**

$\overset{+}{\rightarrow} \Sigma F_x = 0;$ $F_{BC} - 6.667\left(\frac{2}{2.5}\right) = 0$

$F_{BC} = 5.33\ \text{kN (C)}$ **Ans**

Joint *D*:

From Inspection:

$F_{CD} = 0$ **Ans**

Assume $F_{AE} = 0$ **Ans**

$+\uparrow \Sigma F_y = 0;$ $F_{FB}\left(\frac{1.5}{2.5}\right) - 8 - 4 = 0$

$F_{FB} = 20.0\ \text{kN (T)}$ **Ans**

$\zeta + \Sigma M_B = 0;$ $F_{FE}(1.5) - 4(2) = 0$

$F_{FE} = 5.333\ \text{kN} = 5.33\ \text{kN (T)}$ **Ans**

$\overset{+}{\rightarrow} \Sigma F_x = 0;$ $F_{AB} - 5.333 - 20.0\left(\frac{2}{2.5}\right) = 0$

$F_{AB} = 21.3\ \text{kN (C)}$ **Ans**

Joint *B*:

$+\uparrow \Sigma F_y = 0;$ $-F_{BE} - 8 + 20.0\left(\frac{1.5}{2.5}\right) = 0$

$F_{BE} = 4.00\ \text{kN (T)}$ **Ans**

Joint *A*:

$+\uparrow \Sigma F_y = 0;$ $F_{AF} = 0$ **Ans**

www.e-kitabi.com

c07.qxd 6/24/08 3:46 PM Page 181

© 2009 by R.C. Hibbeler. Published by Pearson Prentice Hall, Pearson Education, Inc., Upper Saddle River, NJ. All rights reserved. This material is protected under all copyright laws as they currently exist. No portion of this material may be reproduced, in any form or by any means, without permission in writing from the publisher.

7–3. Determine (approximately) the force in each member of the truss. Assume the diagonals can support either a tensile or a compressive force.

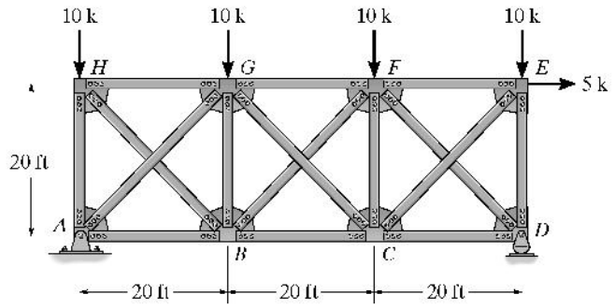

$V_{panel} = 8.33$ k

Assume V_{panel} is carried equally by F_{HB} and F_{AG}, so

$$F_{HB} = \frac{\frac{8.33}{2}}{\cos 45^0} = 5.89 \text{ k (T)} \quad \text{Ans}$$

$$F_{AG} = \frac{\frac{8.33}{2}}{\cos 45^0} = 5.89 \text{ k (C)} \quad \text{Ans}$$

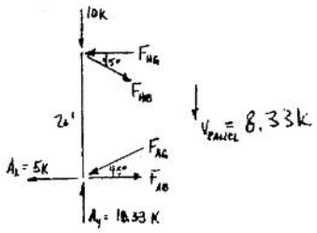

Joint *A*

$\rightarrow \Sigma F_x = 0$; $F_{AB} - 5 - 5.89\cos 45^0 = 0$; $F_{AB} = 9.17$ k (T) Ans

$+\uparrow \Sigma F_y = 0$; $-F_{AH} + 18.33 - 5.89\sin 45^\circ = 0$; $F_{AH} = 14.16$ k (C) Ans

Joint *H*

$\rightarrow \Sigma F_x = 0$; $-F_{HG} + 5.89\cos 45^\circ = 0$; $F_{HG} = 4.17$ k (C) Ans

$V_{panel} = 1.667$ k

$$F_{GC} = \frac{\frac{1.667}{2}}{\cos 45^0} = 1.18 \text{ k (C)} \quad \text{Ans}$$

$$F_{BF} = \frac{\frac{1.667}{2}}{\cos 45^0} = 1.18 \text{ k (T)} \quad \text{Ans}$$

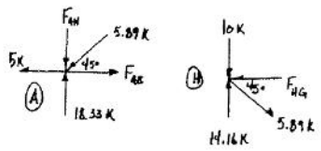

Joint *G*

$\rightarrow \Sigma F_x = 0$; $4.17 + 5.89\cos 45^0 - 1.18\cos 45^0 - F_{GF} = 0$

$F_{GF} = 7.5$ k (C) Ans

$+\uparrow \Sigma F_y = 0$; $-10 + F_{GB} + 5.89\sin 45^0 + 1.18\sin 45^0 = 0$

$F_{GB} = 5.0$ k (C) Ans

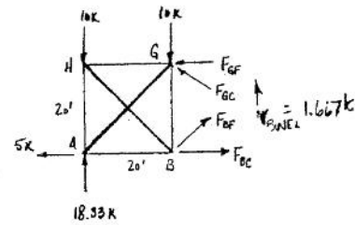

Joint *B*

$\rightarrow \Sigma F_x = 0$; $F_{BC} + 1.18\cos 45^0 - 9.17 - 5.89\cos 45^0 = 0$

$F_{BC} = 12.5$ k (T) Ans

$V_{panel} = 21.667 - 10 = 11.667$ k

$$F_{EC} = \frac{\frac{11.667}{2}}{\cos 45^0} = 8.25 \text{ k (T)} \quad \text{Ans}$$

$$F_{DF} = \frac{\frac{11.667}{2}}{\cos 45^0} = 8.25 \text{ k (C)} \quad \text{Ans}$$

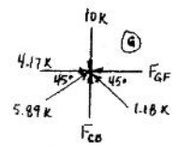

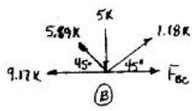

Joint *D*

$\rightarrow \Sigma F_x = 0$; $F_{CD} = 8.25\cos 45^0 = 5.83$ k (T) Ans

$+\uparrow \Sigma F_y = 0$; $21.667 - 8.25\sin 45^0 - F_{ED} = 0$

$F_{ED} = 15.83$ k (C) Ans

Joint *E*

$\rightarrow \Sigma F_x = 0$; $5 + F_{FE} - 8.25\cos 45^0 = 0$

$F_{FE} = 0.833$ k (C) Ans

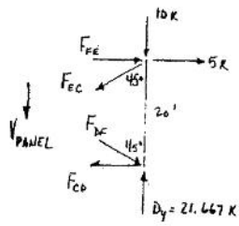

Joint *C*

$+\uparrow \Sigma F_y = 0$; $-F_{FC} + 8.25\sin 45^\circ - 1.18\sin 45^\circ = 0$

$F_{EC} = 5.0$ k (C) Ans

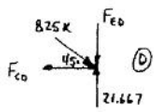

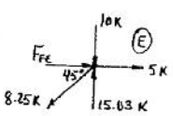

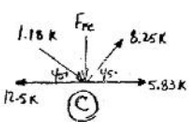

www.e-kitabi.com

c07.qxd 6/24/08 3:46 PM Page 182

© 2009 by R.C. Hibbeler. Published by Pearson Prentice Hall, Pearson Education, Inc., Upper Saddle River, NJ. All rights reserved. This material is protected under all copyright laws as they currently exist. No portion of this material may be reproduced, in any form or by any means, without permission in writing from the publisher.

***7–4.** Solve Prob. 7–3 assuming that the diagonals cannot support a compressive force.

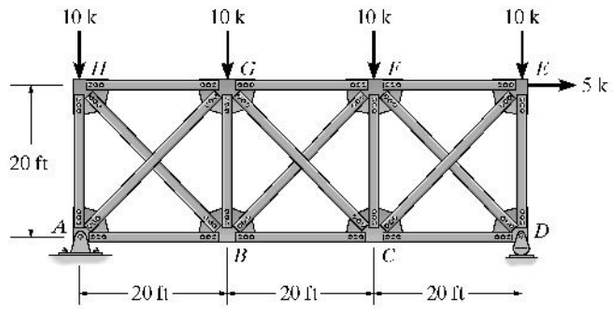

$V_{\text{Panel}} = 8.33$ k

$F_{AG} = 0$ **Ans**

$F_{HB} = \dfrac{8.33}{\sin 45°} = 11.785 = 11.8$ k **Ans**

Joint A :

$\overset{+}{\rightarrow} \Sigma F_x = 0;\quad F_{AB} = 5$ k (T) **Ans**

$+\uparrow \Sigma F_y = 0;\quad F_{AH} = 18.3$ k (C) **Ans**

Joint H :

$\overset{+}{\rightarrow} \Sigma F_x = 0;\quad 11.785 \cos 45° - F_{HG} = 0$

$F_{HG} = 8.33$ k (C) **Ans**

$V_{\text{Panel}} = 1.667$ k

$F_{GC} = 0$ **Ans**

$F_{BF} = \dfrac{1.667}{\sin 45°} = 2.36$ k (T) **Ans**

Joint B :

$\overset{+}{\rightarrow} \Sigma F_x = 0;\quad F_{BC} + 2.36 \cos 45° - 11.785 \cos 45° - 5 = 0$

$F_{BC} = 11.7$ k (T) **Ans**

$+\uparrow \Sigma F_y = 0;\quad -F_{GB} + 11.785 \sin 45° + 2.36 \sin 45° = 0$

$F_{GB} = 10$ k (C) **Ans**

Joint G :

$\overset{+}{\rightarrow} \Sigma F_x = 0;\quad F_{GF} = 8.33$ k (C) **Ans**

$V_{\text{Panel}} = 11.667$ k

$F_{DF} = 0$ **Ans**

$F_{EC} = \dfrac{11.667}{\sin 45°} = 16.5$ k (T) **Ans**

Joint D :

$\overset{+}{\rightarrow} \Sigma F_x = 0;\quad F_{CD} = 0$ **Ans**

$+\uparrow \Sigma F_y = 0;\quad F_{ED} = 21.7$ k (C) **Ans**

Joint E :

$\overset{+}{\rightarrow} \Sigma F_x = 0;\quad F_{EF} + 5 - 16.5 \cos 45° = 0$

$F_{EF} = 6.67$ k (C) **Ans**

Joint F :

$+\uparrow \Sigma F_y = 0;\quad F_{FC} - 10 - 2.36 \sin 45° = 0$

$F_{FC} = 11.7$ k (C) **Ans**

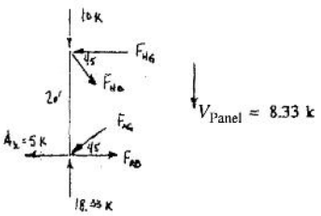

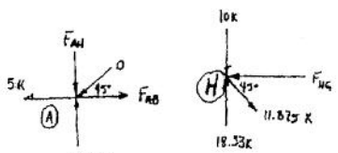

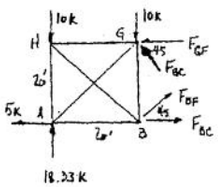

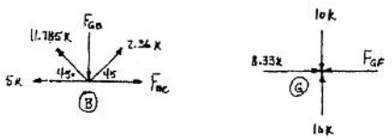

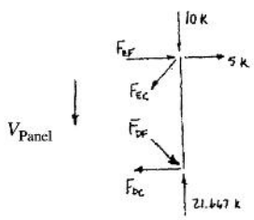

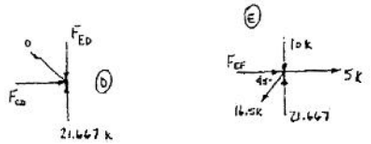

www.e-kitabi.com

c07.qxd 6/24/08 3:46 PM Page 183

© 2009 by R.C. Hibbeler. Published by Pearson Prentice Hall, Pearson Education, Inc., Upper Saddle River, NJ. All rights reserved. This material is protected under all copyright laws as they currently exist. No portion of this material may be reproduced, in any form or by any means, without permission in writing from the publisher.

7–5. Determine (approximately) the force in each member of the truss. Assume the diagonals can support either a tensile or a compressive force.

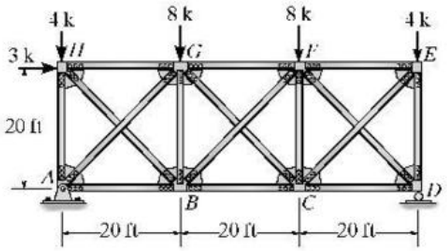

Assume $F_{BH} = F_{GA}$

$+\uparrow \Sigma F_y = 0;\quad -2F_{BH}(\cos 45°) - 4 + 11 = 0$

$F_{BH} = 4.950\text{ k} = 4.95\text{ k (T)}$ **Ans**

$F_{GA} = 4.950\text{ k} = 4.95\text{ k (C)}$ **Ans**

$(+\Sigma M_A = 0;\quad F_{GH}(20) - 4.950(\sin 45°)(20) - 3(20) = 0$

$F_{GH} = 6.50\text{ k (C)}$ **Ans**

$\overset{+}{\rightarrow}\Sigma F_x = 0;\quad F_{BA} - 6.5 + 3 - 3 = 0$

$F_{BA} = 6.50\text{ k (T)}$ **Ans**

Joint A:

$+\uparrow \Sigma F_y = 0;\quad -F_{AH} - 4.950(\sin 45°) + 11 = 0$

$F_{AH} = 7.50\text{ k (C)}$ **Ans**

Assume $F_{BF} = F_{GC}$

$+\uparrow \Sigma F_y = 0;\quad -2F_{BF}(\cos 45°) - 8 - 4 + 13 = 0$

$F_{BF} = 0.7071\text{ k} = 0.707\text{ k (T)}$ **Ans**

$F_{GC} = 0.7071\text{ k} = 0.707\text{ k (C)}$ **Ans**

$(+\Sigma M_C = 0;\quad -F_{GF}(20) - 4(20) + 0.7071(\sin 45°)(20) + 13(20) = 0$

$F_{GF} = 9.50\text{ k (C)}$ **Ans**

$\overset{+}{\rightarrow}\Sigma F_x = 0;\quad F_{BC} - 9.50 = 0$

$F_{BC} = 9.50\text{ k (T)}$ **Ans**

Joint B:

$+\uparrow \Sigma F_y = 0;\quad -F_{BG} + 4.950(\sin 45°) + 0.7071(\sin 45°) = 0$

$F_{BG} = 4.00\text{ k (C)}$ **Ans**

Assume $F_{CE} = F_{FD}$

$+\uparrow \Sigma F_y = 0;\quad -2F_{CE}(\sin 45°) - 4 + 13 = 0$

$F_{CE} = 6.364\text{ k} = 6.36\text{ k (T)}$ **Ans**

$F_{FD} = 6.364\text{ k} = 6.36\text{ k (T)}$ **Ans**

$(+\Sigma M_D = 0;\quad -F_{FE}(20) + 6.364(\cos 45°)(20) = 0$

$F_{FE} = 4.50\text{ k (C)}$ **Ans**

$\overset{+}{\rightarrow}\Sigma F_x = 0;\quad F_{CD} = 4.50\text{ k (T)}$ **Ans**

Joint C:

$+\uparrow \Sigma F_y = 0;\quad -F_{CF} - 0.7071(\sin 45°) + 6.364(\sin 45°) = 0$

$F_{CF} = 4.00\text{ k (C)}$ **Ans**

Joint D:

$+\uparrow \Sigma F_y = 0;\quad -F_{DE} - 6.364(\sin 45°) + 13 = 0$

$F_{DE} = 8.50\text{ k (C)}$ **Ans**

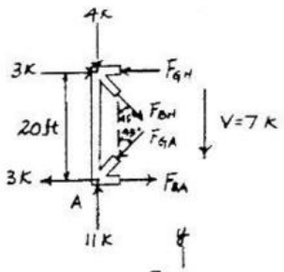

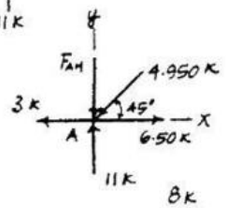

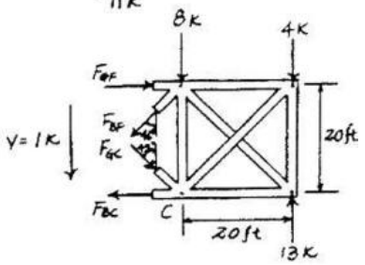

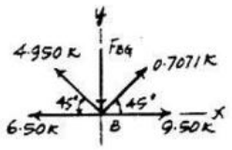

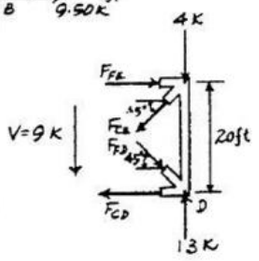

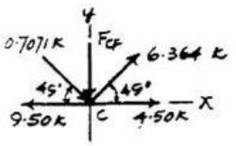

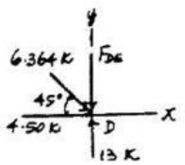

www.e-kitabi.com

c07.qxd 6/24/08 3:46 PM Page 184

© 2009 by R.C. Hibbeler. Published by Pearson Prentice Hall, Pearson Education, Inc., Upper Saddle River, NJ. All rights reserved. This material is protected under all copyright laws as they currently exist. No portion of this material may be reproduced, in any form or by any means, without permission in writing from the publisher.

7–6. Determine (approximately) the force in each member of the truss. Assume the diagonals cannot support a compressive force.

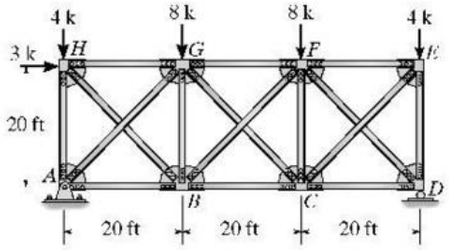

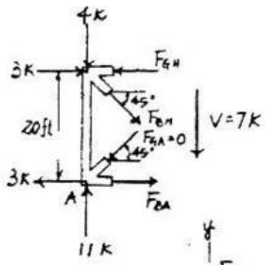

Assume $F_{GA} = 0$ **Ans**

$+\uparrow \Sigma F_y = 0;\quad -F_{BH}(\sin 45°) - 4 + 11 = 0$

$F_{BH} = 9.899\text{ k} = 9.90\text{ k (T)}$ **Ans**

$\circlearrowleft + \Sigma M_A = 0;\quad F_{GH}(20) - 9.899(\cos 45°)(20) - 3(20) = 0$

$F_{GH} = 10.0\text{ k (C)}$ **Ans**

$\overset{+}{\rightarrow} \Sigma F_x = 0;\quad F_{BA} + 3 + 9.899(\cos 45°) - 10 - 3 = 0$

$F_{BA} = 3.00\text{ k (T)}$ **Ans**

Joint A:

$+\uparrow \Sigma F_y = 0;\quad F_{AH} = 11.0\text{ k (C)}$ **Ans**

Assume $F_{GC} = 0$ **Ans**

$+\uparrow \Sigma F_y = 0;\quad -F_{BF}(\sin 45°) - 8 - 4 + 13 = 0$

$F_{BF} = 1.414\text{ k} = 1.41\text{ k (T)}$ **Ans**

$\circlearrowleft + \Sigma M_C = 0;\quad -F_{GF}(20) + 1.414(\cos 45°)(20) - 4(20) + 13(20) = 0$

$F_{GF} = 10.0\text{ k (C)}$ **Ans**

$\overset{+}{\rightarrow} \Sigma F_x = 0;\quad -F_{BC} - 1.414(\cos 45°) + 10 = 0$

$F_{BC} = 9.00\text{ k (T)}$ **Ans**

Joint B:

$+\uparrow \Sigma F_y = 0;\quad -F_{BG} + 9.899(\sin 45°) + 1.414(\sin 45°) = 0$

$F_{BG} = 8.00\text{ k (C)}$ **Ans**

Assume $F_{FD} = 0$ **Ans**

$+\uparrow \Sigma F_y = 0;\quad -F_{CE}(\sin 45°) - 4 + 13 = 0$

$F_{CE} = 12.73\text{ k} = 12.7\text{ k (T)}$ **Ans**

$\circlearrowleft + \Sigma M_D = 0;\quad -F_{FE}(20) + 12.73(\cos 45°)(20) = 0$

$F_{FE} = 9.00\text{ k (C)}$ **Ans**

$\overset{+}{\rightarrow} \Sigma F_x = 0;\quad -F_{CD} - 12.73(\cos 45°) + 9.00 = 0$

$F_{CD} = 0$ **Ans**

Joint C:

$+\uparrow \Sigma F_y = 0;\quad -F_{CF} + 12.73(\sin 45°) = 0$

$F_{CF} = 9.00\text{ k (C)}$ **Ans**

Joint D:

$+\uparrow \Sigma F_y = 0;\quad F_{DE} = 13.0\text{ k (C)}$ **Ans**

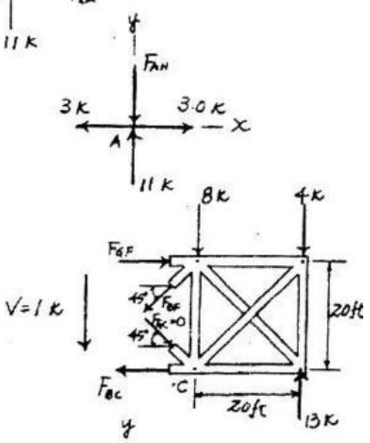

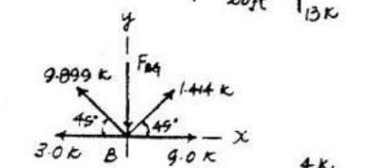

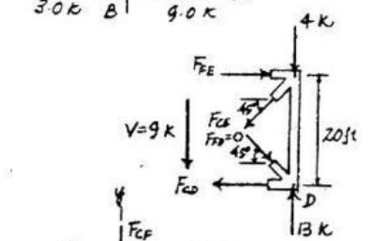

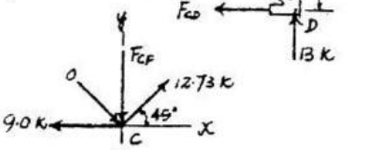

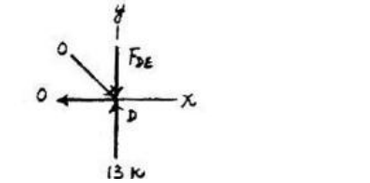

www.e-kitabi.com

c07.qxd 6/24/08 3:46 PM Page 185

© 2009 by R.C. Hibbeler. Published by Pearson Prentice Hall, Pearson Education, Inc., Upper Saddle River, NJ. All rights reserved. This material is protected under all copyright laws as they currently exist. No portion of this material may be reproduced, in any form or by any means, without permission in writing from the publisher.

7–7. Determine (approximately) the force in each member of the truss. Assume the diagonals can support either a tensile or compressive force.

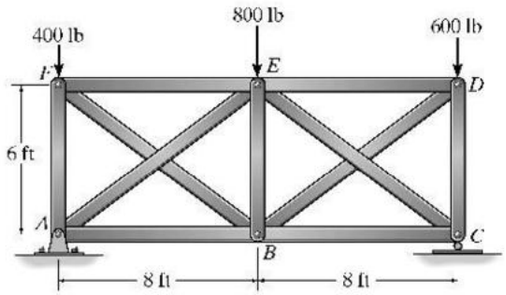

Assume $F_{BF} = F_{EA}$

$+\uparrow \Sigma F_y = 0; \quad -2F_{BF}\left(\frac{3}{5}\right) - 400 + 800 = 0$

$F_{BF} = 333.3 \text{ lb} = 333 \text{ lb (T)}$ **Ans**

$F_{EA} = 333.3 \text{ lb} = 333 \text{ lb (C)}$ **Ans**

$\zeta + \Sigma M_A = 0; \quad F_{EF}(6) - 333.3\left(\frac{4}{5}\right)(6) = 0$

$F_{EF} = 267 \text{ lb (C)}$ **Ans**

$\overset{+}{\rightarrow} \Sigma F_x = 0; \quad F_{BA} = 267 \text{ lb (T)}$ **Ans**

Joint A:

$+\uparrow \Sigma F_y = 0; \quad -F_{AF} - 333.3\left(\frac{3}{5}\right) + 800 = 0$

$F_{AF} = 600 \text{ lb (C)}$ **Ans**

Assume $F_{BD} = F_{EC}$

$+\uparrow \Sigma F_y = 0; \quad -2F_{BD}\left(\frac{3}{5}\right) - 600 + 1000 = 0$

$F_{BD} = 333.3 \text{ lb} = 333 \text{ lb (T)}$ **Ans**

$F_{EC} = 333.3 \text{ lb} = 333 \text{ lb (C)}$ **Ans**

$\zeta + \Sigma M_C = 0; \quad -F_{ED}(6) + 333.3\left(\frac{4}{5}\right)(6) = 0$

$F_{ED} = 267 \text{ lb (C)}$ **Ans**

$\overset{+}{\rightarrow} \Sigma F_x = 0; \quad F_{BC} = 267 \text{ lb (T)}$ **Ans**

Joint B:

$+\uparrow \Sigma F_y = 0; \quad -F_{BE} + 2(333.3)\left(\frac{3}{5}\right) = 0$

$F_{BE} = 400 \text{ lb (C)}$ **Ans**

Joint C:

$+\uparrow \Sigma F_y = 0; \quad -F_{CD} - 333.3\left(\frac{3}{5}\right) + 1000 = 0$

$F_{CD} = 800 \text{ lb (C)}$ **Ans**

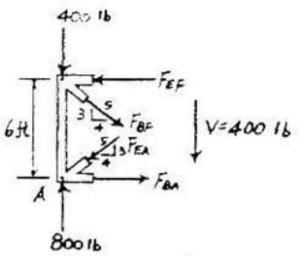

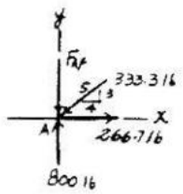

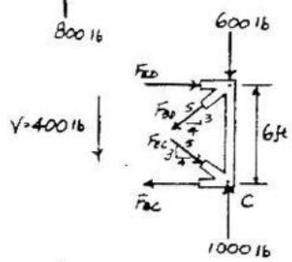

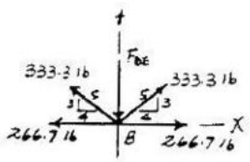

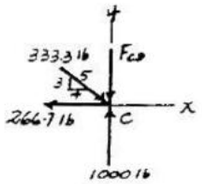

www.e-kitabi.com

c07.qxd 6/24/08 3:46 PM Page 186

© 2009 by R.C. Hibbeler. Published by Pearson Prentice Hall, Pearson Education, Inc., Upper Saddle River, NJ. All rights reserved. This material is protected under all copyright laws as they currently exist. No portion of this material may be reproduced, in any form or by any means, without permission in writing from the publisher.

***7–8.** Determine (approximately) the internal moments at joints F and D of the frame.

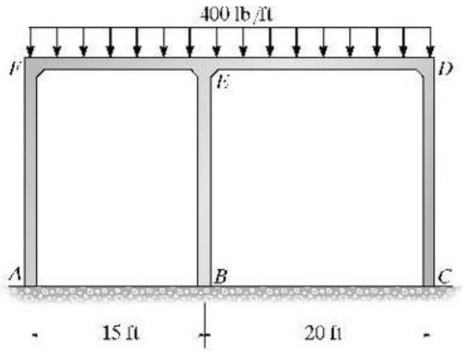

$(+\Sigma M_F = 0;\quad M_F - 0.6(0.75) - 2.4(1.5) = 0$

$M_F = 4.05\ \text{k}\cdot\text{ft}$ **Ans**

$(+\Sigma M_D = 0;\quad -M_D + 0.8(1) + 3.2(2) = 0$

$M_D = 7.20\ \text{k}\cdot\text{ft}$ **Ans**

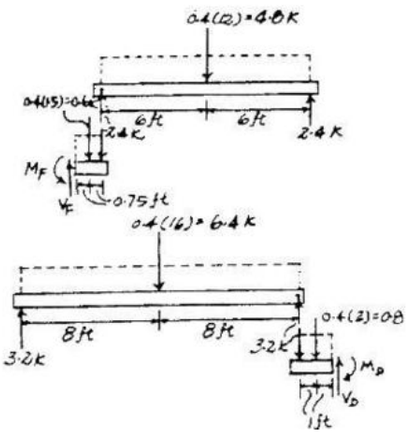

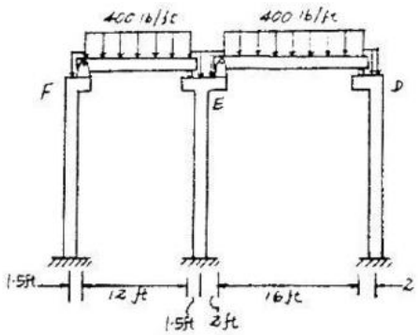

7–9. Determine (approximately) the internal moments at joints E and C caused by members EF and CD, respectively.

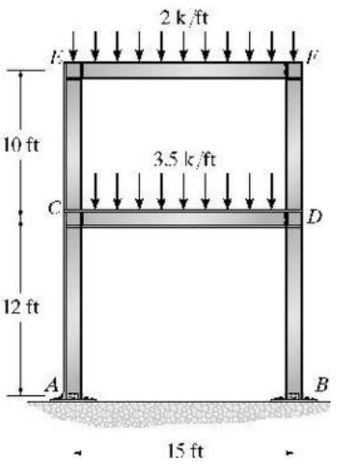

$(+\Sigma M_E = 0;\quad M_E - 3(0.75) - 12(1.5) = 0$

$M_E = 20.25\ \text{k}\cdot\text{ft}$ **Ans**

$(+\Sigma M_C = 0;\quad M_C - 5.25(0.75) - 21(1.5) = 0$

$M_C = 35.4\ \text{k}\cdot\text{ft}$ **Ans**

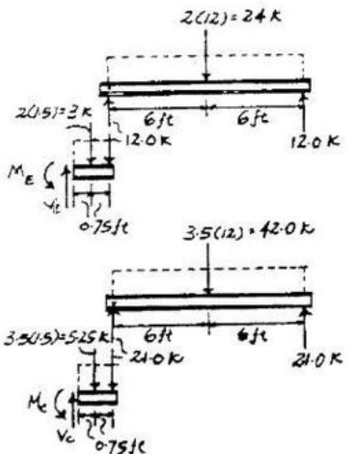

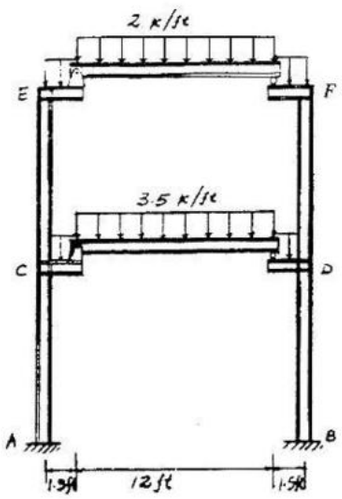

www.e-kitabi.com

c07.qxd 6/24/08 3:46 PM Page 187

© 2009 by R.C. Hibbeler. Published by Pearson Prentice Hall, Pearson Education, Inc., Upper Saddle River, NJ. All rights reserved. This material is protected under all copyright laws as they currently exist. No portion of this material may be reproduced, in any form or by any means, without permission in writing from the publisher.

7–10. Determine (approximately) the support actions at A, B, and C of the frame.

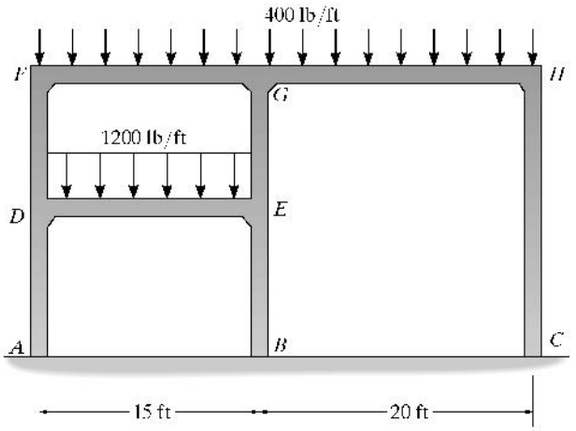

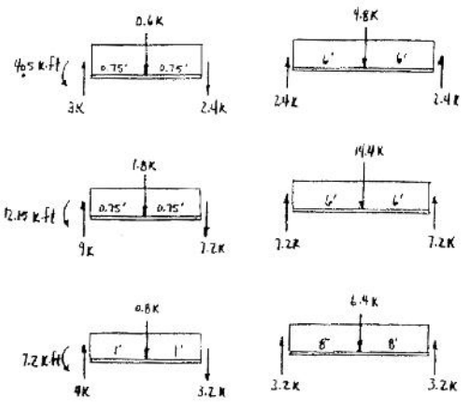

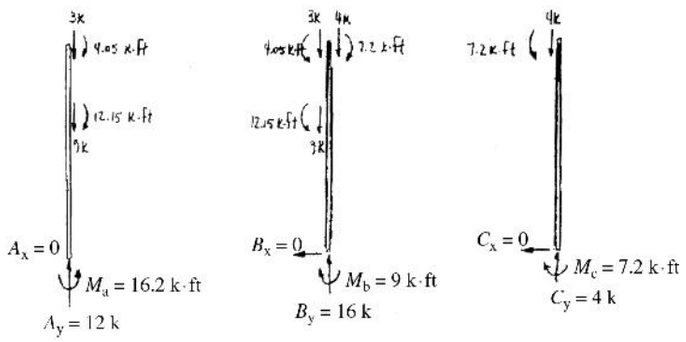

$A_x = 0$	$B_x = 0$	$C_x = 0$	**Ans**
$A_y = 12$ k	$B_y = 16$ k	$C_y = 4$ k	**Ans**
$M_A = 16.2$ k·ft	$M_B = 9$ k·ft	$M_C = 7.2$ k·ft	**Ans**

www.e-kitabi.com

© 2009 by R.C. Hibbeler. Published by Pearson Prentice Hall, Pearson Education, Inc., Upper Saddle River, NJ. All rights reserved. This material is protected under all copyright laws as they currently exist. No portion of this material may be reproduced, in any form or by any means, without permission in writing from the publisher.

7–11. Determine (approximately) the internal moments at joints *I* and *L*. Also, what is the internal moment at joint *H* caused by member *HG*?

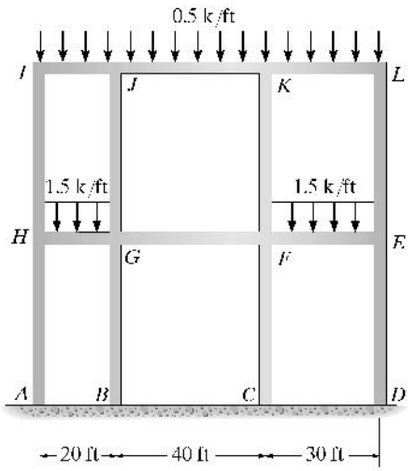

Joint *I*

$(+\Sigma M_I = 0;\ M_I - 1.0(1) - 4.0(2) = 0$

$M_I = 9.00\ \text{k}\cdot\text{ft}$ **Ans**

Joint *L*:

$(+\Sigma M_L = 0;\ M_L - 6.0(3) - 1.5(1.5) = 0$

$M_L = = 20.25\ \text{k}\cdot\text{ft}$ **Ans**

Joint *H*:

$(+\Sigma M_H = 0;\ M_H - 3.0(1) - 12.0(2) = 0$

$M_H = 27.0\ \text{k}\cdot\text{ft}$ **Ans**

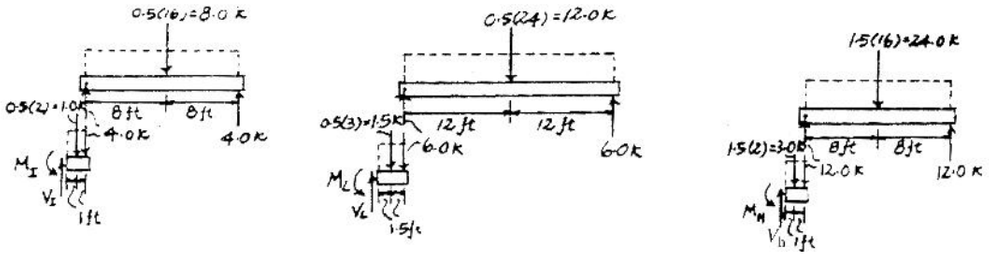

*7–12. Determine (approximately) the internal moment and shear at the ends of each member of the portal frame. Assume the supports at *A* and *D* are partially fixed, such that an inflection point is located at *h*/3 from the bottom of each column.

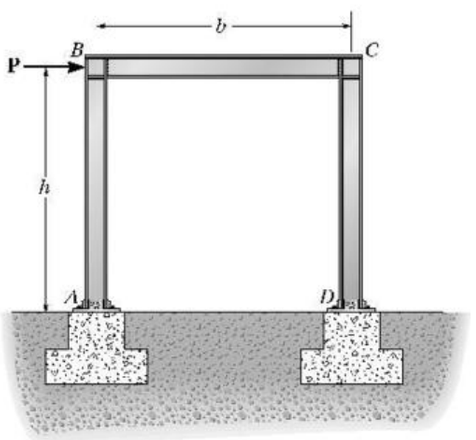

$(+\Sigma M_E = 0;\ G_y(b) - P\left(\frac{2h}{3}\right) = 0$

$G_y = P\left(\frac{2h}{3b}\right)$

$+\uparrow \Sigma F_y = 0;\ E_y - \frac{2Ph}{3b} = 0$

$E_y = \frac{2Ph}{3b}$

$M_A = M_D = \frac{P}{2}\left(\frac{h}{3}\right) = \frac{Ph}{6}$ **Ans**

$M_B = M_C = \frac{P}{2}\left(\frac{2h}{3}\right) = \frac{Ph}{3}$ **Ans**

Member *BC*:

$V_B = V_C = \frac{2Ph}{3b}$ **Ans**

Members *AB* and *CD*:

$V_A = V_B = V_C = V_D = \frac{P}{2}$ **Ans**

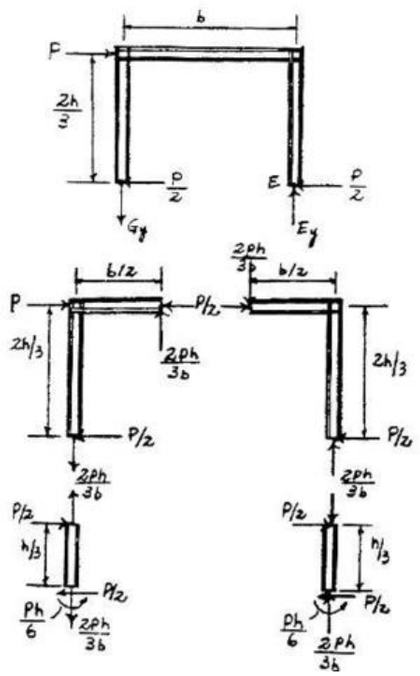

www.e-kitabi.com

c07.qxd 6/24/08 3:46 PM Page 189

© 2009 by R.C. Hibbeler. Published by Pearson Prentice Hall, Pearson Education, Inc., Upper Saddle River, NJ. All rights reserved. This material is protected under all copyright laws as they currently exist. No portion of this material may be reproduced, in any form or by any means, without permission in writing from the publisher.

7–13. Determine (approximately) the internal moment at joints D and C. Assume the supports at A and B are pins.

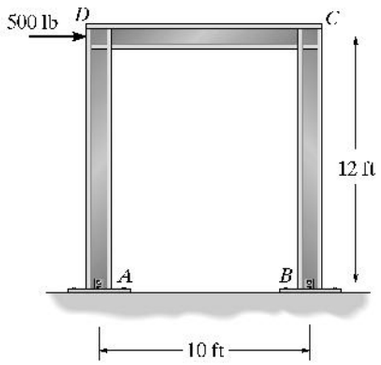

Entire Frame (1)

$\curvearrowleft + \Sigma M_A = 0;$ $\quad 10B_y - 12(500) = 0;$ $\quad B_y = 600$ lb

$+\uparrow \Sigma F_y = 0;$ $\quad A_y = 600$ lb

FBD (2)

$\curvearrowleft + \Sigma M_E = 0;$ $\quad 5(600) - 12(A_x) = 0;$ $\quad A_x = 250$ lb

$\rightarrow \Sigma F_x = 0;$ $\quad E_x = 250$ lb

FBD (3)

$\curvearrowleft + \Sigma M_D = 0;$ $\quad M_D - 12(250) = 0;$ $\quad M_D = 3.00$ k·ft **Ans**

$N_D = 600$ lb

$V_D = 250$ lb

FBD (4)

$\curvearrowleft + \Sigma M_C = 0;$ $\quad M_C - 12(250) = 0;$ $\quad M_C = 3.00$ k·ft **Ans**

$N_C = 600$ lb

$V_C = 250$ lb

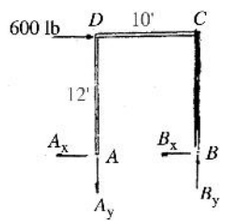

(1)

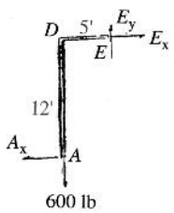

(2)

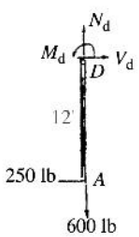

(3)

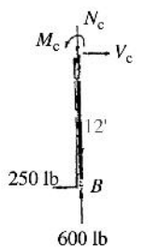

(4)

www.e-kitabi.com

c07.qxd 6/24/08 3:46 PM Page 190

© 2009 by R.C. Hibbeler. Published by Pearson Prentice Hall, Pearson Education, Inc., Upper Saddle River, NJ. All rights reserved. This material is protected under all copyright laws as they currently exist. No portion of this material may be reproduced, in any form or by any means, without permission in writing from the publisher.

7–14. Determine (approximately) the internal moment and shear at the ends of each member of the portal frame. Assume the supports at A and D are (a) pinned, (b) fixed and (c) partially fixed such that the inflection point for the columns is located $h/3 = 6$ ft up from A and D.

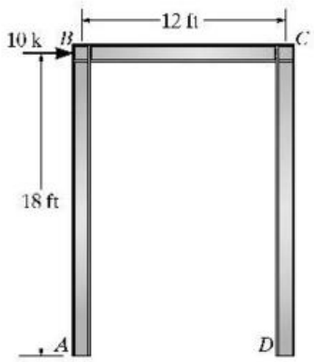

(a)

$M_A = M_D = 0$ **Ans**

$M_B = M_C = 5.0(18) = 90.0$ k · ft **Ans**

or

$M_B = M_C = 15.0(6) = 90.0$ k · ft **Ans**

For members AB and CD:

$V_A = V_B = V_C = V_D = 5.00$ k **Ans**

For member BC:

$V_B = V_C = 15.0$ k **Ans**

(b)

$M_A = M_D = 5.0(9) = 45.0$ k · ft **Ans**

$M_B = M_C = 5.0(9) = 45.0$ k · ft **Ans**

or

$M_B = M_C = 7.5(6) = 45.0$ k · ft **Ans**

For members AB and CD:

$V_A = V_B = V_C = V_D = 5.00$ k **Ans**

For member BC:

$V_B = V_C = 7.50$ k **Ans**

(c)

$M_A = M_D = 5.0(6) = 30.0$ k · ft **Ans**

$M_B = M_C = 5.0(12) = 60.0$ k · ft **Ans**

or

$M_B = M_C = 7.5(6) = 60.0$ k · ft **Ans**

For members AB and CD:

$V_A = V_B = V_C = V_D = 5.00$ k **Ans**

For member BC:

$V_B = V_C = 10.0$ k **Ans**

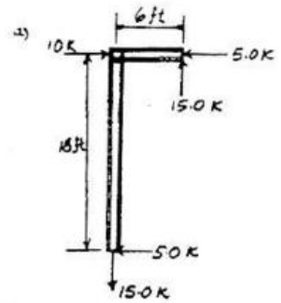

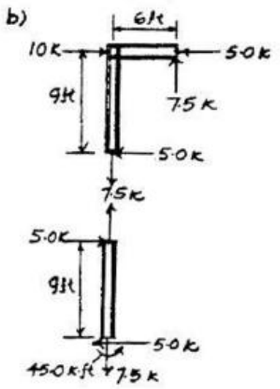

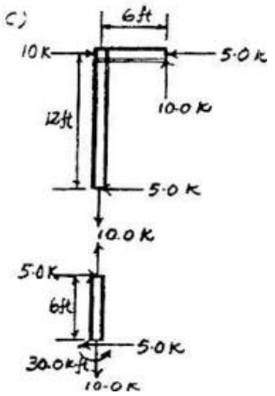

7–15. Draw (approximately) the moment diagram for column ACE of the portal constructed with a *rigid* girder and knee braces CF and DH. Assume that all points of connection are pins. Also determine the force in the knee brace CF.

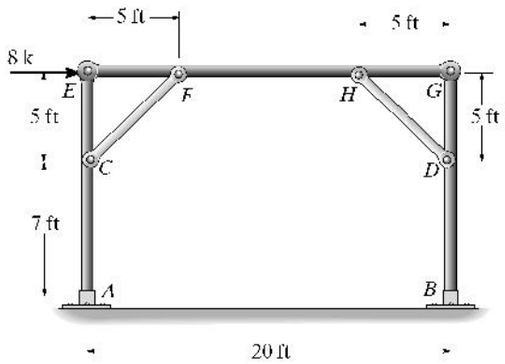

$(+\Sigma M_E = 0;\quad F_{CF}(\sin 45°)(5) - 4.0(12) = 0$

$F_{CF} = 13.6$ k **Ans**

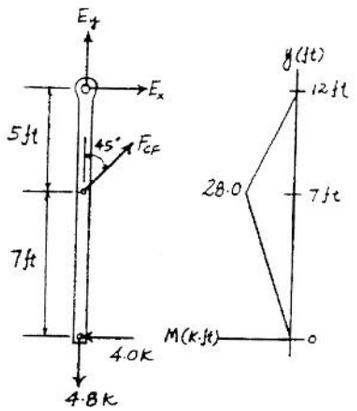

www.e-kitabi.com

© 2009 by R.C. Hibbeler. Published by Pearson Prentice Hall, Pearson Education, Inc., Upper Saddle River, NJ. All rights reserved. This material is protected under all copyright laws as they currently exist. No portion of this material may be reproduced, in any form or by any means, without permission in writing from the publisher.

***7–16.** Solve Prob. 7–15 if the supports at A and B are fixed instead of pinned.

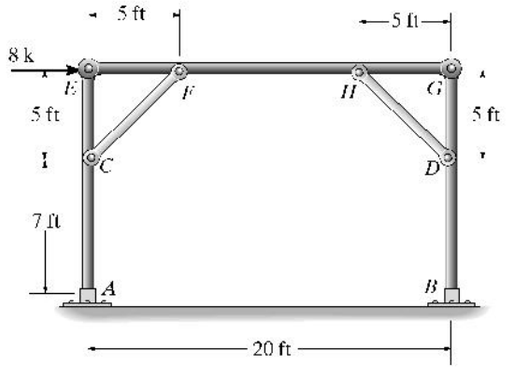

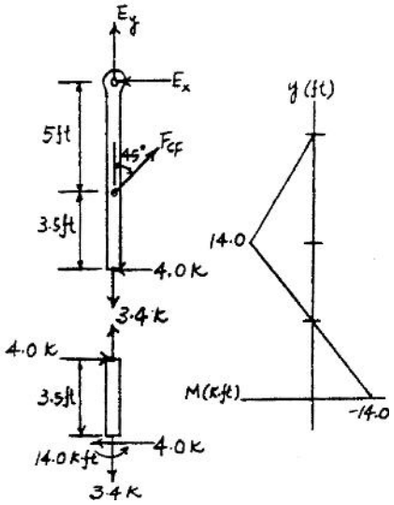

$\circlearrowleft + \Sigma M_E = 0;$ $\quad F_{CF}(\sin 45°)(5) - 4.0(8.5) = 0$

$F_{CF} = 9.62$ k **Ans**

7–17. Draw (approximately) the moment diagram for column ACE of the portal. Assume all truss members and the columns to be pin connected at their ends. Also determine the force in members EG, CG, and EF.

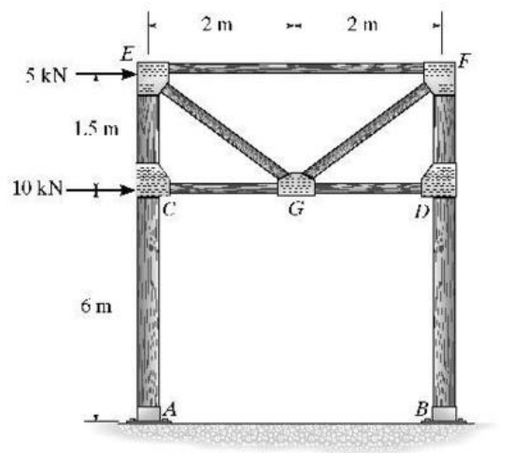

$+\uparrow \Sigma F_y = 0;$ $\quad \frac{3}{5}(F_{EG}) - 24.375 = 0$

$F_{EG} = 40.625$ kN $= 40.6$ kN (C) **Ans**

$\circlearrowleft + \Sigma M_E = 0;$ $\quad F_{CG}(1.5) + 10(1.5) - 7.5(7.5) = 0$

$F_{CG} = 27.5$ kN (T) **Ans**

$\xrightarrow{+} \Sigma F_x = 0;$ $\quad -F_{EF} - 7.5 - \frac{4}{5}(40.625) + 15 + 27.5 = 0$

$F_{EF} = 2.5$ kN (C) **Ans**

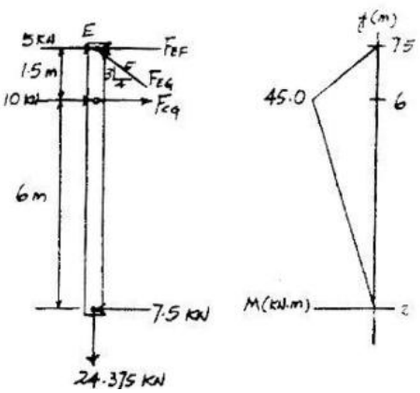

www.e-kitabi.com

c07.qxd 6/24/08 3:46 PM Page 192

© 2009 by R.C. Hibbeler. Published by Pearson Prentice Hall, Pearson Education, Inc., Upper Saddle River, NJ. All rights reserved. This material is protected under all copyright laws as they currently exist. No portion of this material may be reproduced, in any form or by any means, without permission in writing from the publisher.

7–18. Solve Prob. 7–17 if the supports at A and B are fixed instead of pinned.

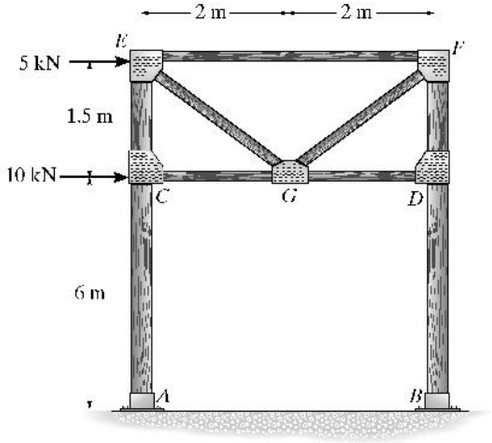

$+\uparrow \Sigma F_y = 0;\quad \frac{3}{5}(F_{EG}) - 13.125 = 0$

$F_{EG} = 21.875\ \text{kN} = 21.9\ \text{kN (C)}$ **Ans**

$\zeta + \Sigma M_E = 0;\quad F_{CG}(1.5) + 10(1.5) - 7.5(4.5) = 0$

$F_{CG} = 12.5\ \text{kN (T)}$ **Ans**

$\overset{+}{\rightarrow} \Sigma F_x = 0;\quad -F_{EF} - \frac{4}{5}(21.875) - 7.5 + 15 + 12.5 = 0$

$F_{EF} = 2.50\ \text{kN (C)}$ **Ans**

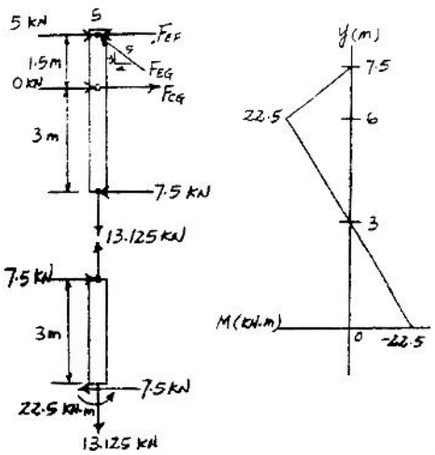

www.e-kitabi.com

c07.qxd 6/24/08 3:46 PM Page 193

© 2009 by R.C. Hibbeler. Published by Pearson Prentice Hall, Pearson Education, Inc., Upper Saddle River, NJ. All rights reserved. This material is protected under all copyright laws as they currently exist. No portion of this material may be reproduced, in any form or by any means, without permission in writing from the publisher.

7–19. Determine (approximately) the force in each truss member of the portal frame. Also find the reactions at the fixed column supports A and B. Assume all members of the truss to be pin connected at their ends.

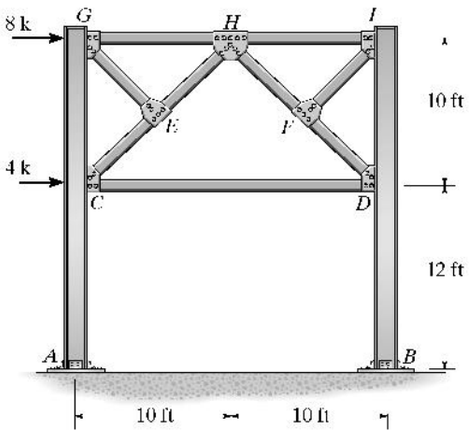

By inspection of joints E and F:

$F_{EG} = 0$ **Ans**

$F_{FI} = 0$ **Ans**

$+\uparrow \Sigma F_y = 0;\quad F_{CE}(\cos 45°) - 7.60 = 0$

$F_{CE} = 10.748\text{ k} = 10.7\text{ k (T)}$ **Ans**

$\circlearrowleft + \Sigma M_C = 0;\quad F_{GH}(10) - 8(10) - 6.0(6) = 0$

$F_{GH} = 11.6\text{ k (C)}$ **Ans**

$\overset{+}{\rightarrow} \Sigma F_x = 0;\quad -F_{CD} - 6 - 11.6 + 8 + 4 + 10.748(\sin 45°) = 0$

$F_{CD} = 2.00\text{ k (C)}$ **Ans**

$M_A = M_B = 36.0\text{ k}\cdot\text{ft}$ **Ans**

$A_x = B_x = 6.00\text{ k}$ **Ans**

$A_y = B_y = 7.60\text{ k}$ **Ans**

Joint E:

$+\nearrow \Sigma F_x = 0;\quad F_{EH} = 10.7\text{ k (T)}$ **Ans**

Joint H:

$+\uparrow \Sigma F_y = 0;\quad F_{HF}\sin 45° - 10.748\sin 45° = 0$

$F_{HF} = 10.748 = 10.7\text{ k (C)}$ **Ans**

$\overset{+}{\rightarrow} \Sigma F_x = 0;\quad F_{HI} + 11.6 - 2(10.748)(\cos 45°) = 0$

$F_{HI} = 3.60\text{ k (T)}$ **Ans**

Joint F:

$+\nwarrow \Sigma F_y = 0;\quad F_{FD} = 10.7\text{ k (C)}$ **Ans**

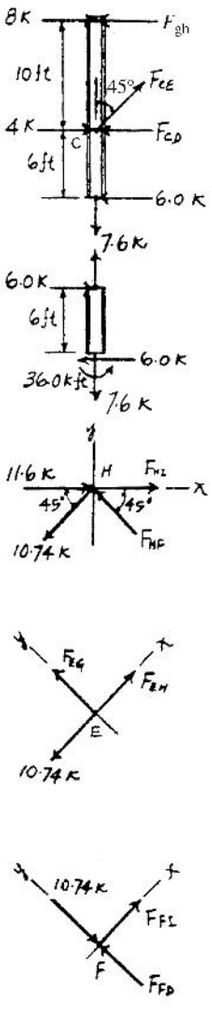

www.e-kitabi.com

c07.qxd 6/24/08 3:46 PM Page 194

© 2009 by R.C. Hibbeler. Published by Pearson Prentice Hall, Pearson Education, Inc., Upper Saddle River, NJ. All rights reserved. This material is protected under all copyright laws as they currently exist. No portion of this material may be reproduced, in any form or by any means, without permission in writing from the publisher.

***7–20.** Determine (approximately) the force in each truss member of the portal frame. Also find the reactions at the fixed column supports A and B. Assume all members of the truss to be pin connected at their ends.

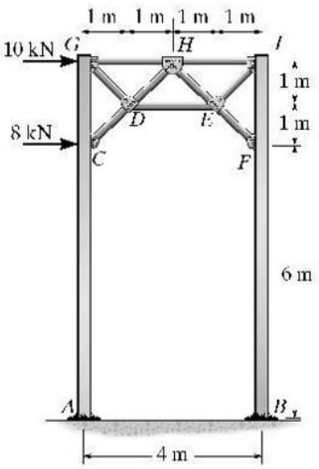

Support Reactions :

$M_A = M_B = 27.0 \text{ kN} \cdot \text{m}$ **Ans**

$A_x = B_x = 9.00 \text{ kN}$ **Ans**

$A_y = B_y = 18.5 \text{ kN}$ **Ans**

$\zeta + \Sigma M_G = 0;$ $F_{CD} \sin 45°(2) + 8(2) - 9.0(5) = 0$

$F_{CD} = 20.51 \text{ kN} = 20.5 \text{ kN (T)}$ **Ans**

$+\uparrow \Sigma F_y = 0;$ $F_{GD} \cos 45° + 20.51 \cos 45° - 18.5 = 0$

$F_{GD} = 5.657 \text{ kN} = 5.66 \text{ kN (C)}$ **Ans**

$\overset{+}{\rightarrow} \Sigma F_x = 0;$ $-F_{GH} - 5.657 \sin 45° - 9 + 20.51 \sin 45° + 8 + 10 = 0$

$F_{GH} = 19.5 \text{ kN (C)}$ **Ans**

Joint D :

$+\uparrow \Sigma F_y = 0;$ $F_{DH} \sin 45° - 5.657 \sin 45° - 20.51 \sin 45° = 0$

$F_{DH} = 26.16 \text{ kN} = 26.2 \text{ kN (T)}$ **Ans**

$\overset{+}{\rightarrow} \Sigma F_x = 0;$ $-F_{DE} - 20.51 \cos 45° + 5.663 \cos 45° + 26.16 \cos 45° = 0$

$F_{DE} = 8.00 \text{ kN (C)}$ **Ans**

Joint H :

$+\uparrow \Sigma F_y = 0;$ $F_{HE} \sin 45° - 26.16 \sin 45° = 0$

$F_{HE} = 26.16 \text{ kN} = 26.2 \text{ kN (C)}$ **Ans**

$\overset{+}{\rightarrow} \Sigma F_x = 0;$ $F_{HI} + 19.5 - 2(26.16) \cos 45° = 0$

$F_{HI} = 17.5 \text{ kN (T)}$ **Ans**

Joint E :

$\searrow + \Sigma F_x = 0;$ $-F_{EF} + 8.00 \cos 45° + 26.16 = 0$

$F_{EF} = 31.8 \text{ kN (C)}$ **Ans**

$+\nearrow \Sigma F_y = 0;$ $-F_{EI} + 8.00 \sin 45° = 0$

$F_{EI} = 5.66 \text{ kN (C)}$ **Ans**

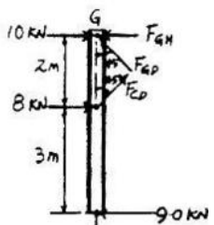

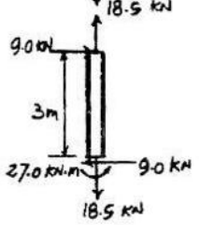

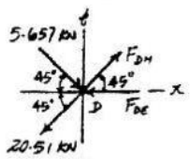

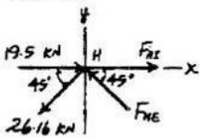

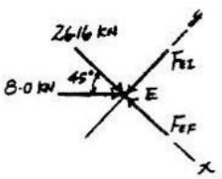

www.e-kitabi.com

c07.qxd 6/24/08 3:46 PM Page 195

© 2009 by R.C. Hibbeler. Published by Pearson Prentice Hall, Pearson Education, Inc., Upper Saddle River, NJ. All rights reserved. This material is protected under all copyright laws as they currently exist. No portion of this material may be reproduced, in any form or by any means, without permission in writing from the publisher.

7–21. Determine (approximately) the force in each truss member of the portal frame. Also, find the reactions at the column supports A and B. Assume all members of the truss and the columns to be pin connected at their ends.

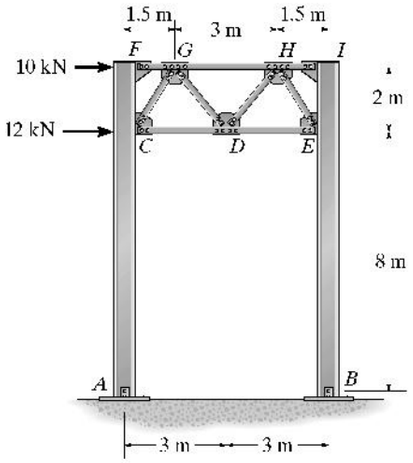

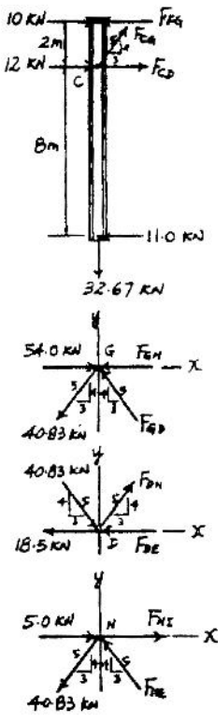

Support reactions :

$A_x = B_x = 11.0$ kN Ans

$A_y = B_y = 32.7$ kN Ans

$+\uparrow \Sigma F_y = 0;$ $\frac{4}{5}F_{CG} - 32.67 = 0$

$F_{CG} = 40.83$ kN $= 40.8$ kN (T) Ans

$(+ \Sigma M_C = 0;$ $F_{FG}(2) - 10(2) - 11.0(8) = 0$

$F_{FG} = 54.0$ kN (C) Ans

$\stackrel{+}{\rightarrow} \Sigma F_x = 0;$ $F_{CD} + 10 + 12 + \frac{3}{5}(40.83) - 54.0 - 11.0 = 0$

$F_{CD} = 18.5$ kN (T) Ans

Joint G :

$+\uparrow \Sigma F_y = 0;$ $\frac{4}{5}F_{GD} - \frac{4}{5}(40.83) = 0$

$F_{GD} = 40.83$ kN $= 40.8$ kN (C) Ans

$\stackrel{+}{\rightarrow} \Sigma F_x = 0;$ $-F_{GH} - 2\left(\frac{3}{5}\right)(40.83) + 54.0 = 0$

$F_{GH} = 5.00$ kN (C) Ans

Joint D :

$+\uparrow \Sigma F_y = 0;$ $\frac{4}{5}F_{DH} - \frac{4}{5}(40.83) = 0$

$F_{DH} = 40.83$ kN $= 40.8$ kN (T) Ans

$\stackrel{+}{\rightarrow} \Sigma F_x = 0;$ $-F_{DE} - 18.5 + 2\left(\frac{3}{5}\right)(40.83) = 0$

$F_{DE} = 30.5$ kN (C) Ans

Joint H :

$+\uparrow \Sigma F_y = 0;$ $\frac{4}{5}F_{HE} - \frac{4}{5}(40.83) = 0$

$F_{HE} = 40.83$ kN $= 40.8$ kN (C) Ans

$\stackrel{+}{\rightarrow} \Sigma F_x = 0;$ $F_{HI} + 5.00 - 2\left(\frac{3}{5}\right)(40.83) = 0$

$F_{HI} = 44.0$ kN (T) Ans

www.e-kitabi.com

© 2009 by R.C. Hibbeler. Published by Pearson Prentice Hall, Pearson Education, Inc., Upper Saddle River, NJ. All rights reserved. This material is protected under all copyright laws as they currently exist. No portion of this material may be reproduced, in any form or by any means, without permission in writing from the publisher.

7–22. Determine (approximately) the force in each truss member of the portal frame. Assume all members of the truss to be pin connected at their ends.

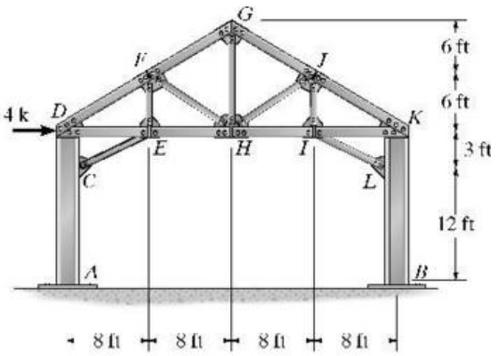

$A_x = B_y = 2$ k Ans

$A_y = B_y = 1.125$ k Ans

$M_A = M_B = 12.0$ k·ft Ans

Section :

$+\Sigma M_D = 0;\quad \frac{8}{\sqrt{73}}(F_{CE})(3) - 2.0(9) = 0;$

$F_{CE} = 6.408\text{ k} = 6.41\text{ k (T)}$ Ans

$+\uparrow \Sigma F_y = 0;\quad \frac{3}{\sqrt{73}}(6.408) - 1.125 - \frac{3}{5}(F_{DF}) = 0;$

$F_{DF} = 1.875\text{ k} = 1.88\text{ k (C)}$ Ans

$\overset{+}{\rightarrow}\Sigma F_x = 0;\quad 4 - \frac{4}{5}(1.875) - F_{DE} + \frac{8}{\sqrt{73}}(6.408) - 2 = 0$

$F_{DE} = 6.50\text{ k (C)}$ Ans

Joint E :

$+\uparrow \Sigma F_y = 0;\quad F_{EF} - \frac{3}{\sqrt{73}}(6.408) = 0$

$F_{EF} = 2.25\text{ k (T)}$ Ans

$\overset{+}{\rightarrow}\Sigma F_x = 0;\quad -F_{EH} + 6.50 - \frac{8}{\sqrt{73}}(6.408) = 0$

$F_{EH} = 0.500\text{ k (C)}$ Ans

Joint F :

$+\Sigma F_y = 0;\quad -2.25(\cos 36.87°) + F_{FH}(\cos 16.26°) = 0;$

$F_{FH} = 1.875 = 1.88\text{ k (C)}$ Ans

$+\Sigma F_x = 0;\quad 1.875 - F_{FG} - 2.25(\sin 36.87°) - 1.875(\sin 16.26°) = 0$

$F_{FG} = 0$ Ans

Joint G :

$\overset{+}{\rightarrow}\Sigma F_x = 0;\quad F_{GJ} = 0$ Ans

$+\uparrow \Sigma F_y = 0;\quad F_{GH} = 0$ Ans

Joint H :

$+\uparrow \Sigma F_y = 0;\quad \frac{3}{5}F_{HJ} - \frac{3}{5}(1.875) = 0$

$F_{HJ} = 1.875 = 1.88\text{ k (T)}$ Ans

$\overset{+}{\rightarrow}\Sigma F_x = 0;\quad -F_{HI} + 0.5 + \frac{4}{5}(1.875)(2) = 0$

$F_{HI} = 3.50\text{ k (C)}$ Ans

Joint J :

$+\Sigma F_y = 0;\quad -1.875(\cos 16.26°) + F_{JI}(\cos 36.87°) = 0$

$F_{JI} = 2.25\text{ k (C)}$ Ans

$+\Sigma F_x = 0;\quad F_{JK} - 1.875(\sin 16.26°) - 2.25(\sin 36.87°) = 0;$

$F_{JK} = 1.875\text{ k (T)}$ Ans

Joint I :

$+\uparrow \Sigma F_y = 0;\quad (\frac{3}{\sqrt{73}})F_{IL} - 2.25 = 0$

$F_{IL} = 6.408\text{ k} = 6.41\text{ k (C)}$ Ans

$\overset{+}{\rightarrow}\Sigma F_x = 0;\quad F_{IK} - (\frac{8}{\sqrt{73}})\,6.408 + 3.50 = 0$

$F_{IK} = 2.50\text{ k (T)}$ Ans

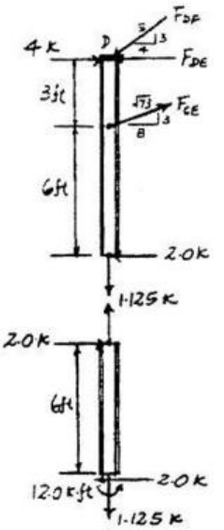

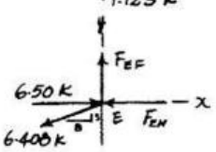

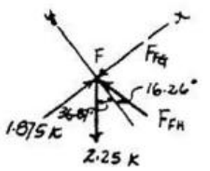

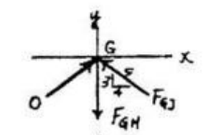

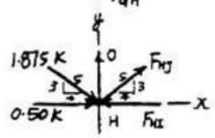

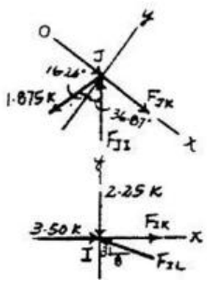

www.e-kitabi.com

c07.qxd 6/24/08 3:46 PM Page 197

© 2009 by R.C. Hibbeler. Published by Pearson Prentice Hall, Pearson Education, Inc., Upper Saddle River, NJ. All rights reserved. This material is protected under all copyright laws as they currently exist. No portion of this material may be reproduced, in any form or by any means, without permission in writing from the publisher.

7–23. Determine (approximately) the force in each truss member of the portal frame. Also compute the reactions at the fixed column supports A and B. Assume all members of the truss to be pin connected at their ends.

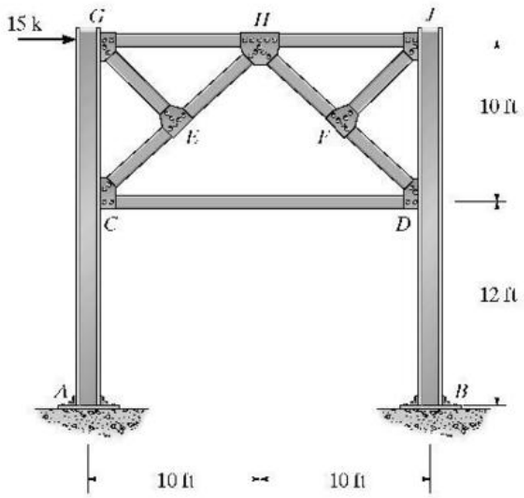

Inflection points are at 6 ft from A and B.

$(+\Sigma M_L = 0;\quad K_y(20) - 15(16) = 0$

$K_y = 12$ k

$+\uparrow \Sigma F_y = 0;\quad -12 + L_y = 0;\quad L_y = 12$ k

Joint E

$\Sigma F_x = 0;\quad F_{EG} = 0$ **Ans**

FBD (1)

$+\uparrow \Sigma F_y = 0;\quad -12 + F_{EC}(\sin 45°) = 0;\quad F_{EC} = 16.97 = 17.0$ k (T) **Ans**

$(+\Sigma M_C = 0;\quad 15(10) + 7.5(6) - F_{GH}(10) = 0;\ F_{GH} = 19.5$ k (C) **Ans**

$\rightarrow \Sigma F_x = 0;\quad 15 - 19.5 - 7.5 + F_{CD} + 16.97(\cos 45°) = 0;$

$F_{CD} = 0$ **Ans**

Joint E

$+\nearrow \Sigma F_x = 0;\quad F_{EH} = F_{EC} = 17.0$ k (T) **Ans**

Joint H

$+\uparrow \Sigma F_y = 0;\quad -17.0\sin 45° + F_{HF}\sin 45° = 0;\quad F_{HF} = 17.0$ k (C) **Ans**

$\rightarrow \Sigma F_x = 0;\quad F_{HJ} + 19.5 - 2(17.0)\cos 45° = 0;\quad F_{HJ} = 4.50$ k (T) **Ans**

Joint F

$+\nearrow \Sigma F_y = 0;\quad F_{FJ} = 0$ **Ans**

$+\nwarrow \Sigma F_x = 0;\quad F_{FD} = 17.0$ k (C) **Ans**

From FBDs (3) and (4)

$A_x = 7.5$ k $\quad B_x = 7.5$ k

$A_y = 12.0$ k $\quad B_y = 12.0$ k

$M_A = 45.0$ k·ft $\quad M_B = 45.0$ k·ft

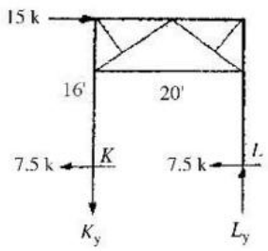

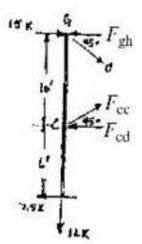

(1)

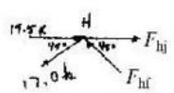

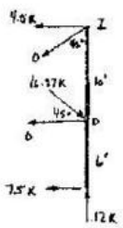

(2)

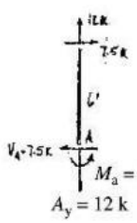

(3)

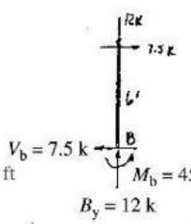

(4)

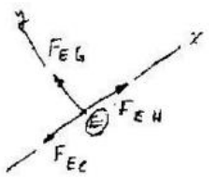

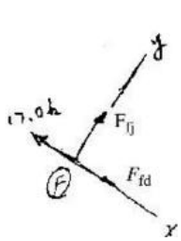

www.e-kitabi.com

c07.qxd 6/24/08 3:46 PM Page 198

© 2009 by R.C. Hibbeler. Published by Pearson Prentice Hall, Pearson Education, Inc., Upper Saddle River, NJ. All rights reserved. This material is protected under all copyright laws as they currently exist. No portion of this material may be reproduced, in any form or by any means, without permission in writing from the publisher.

***7–24.** Use the portal method of analysis and determine (approximately) the reactions at A, B, C, D, and E of the frame.

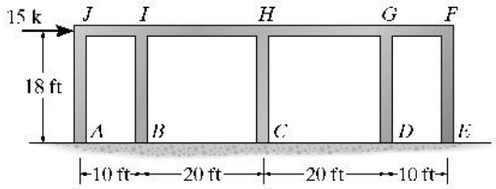

$\overset{+}{\leftarrow}\Sigma F_x = 0;$ $\quad 8V - 15 = 0$

$V = 1.875$ k

$A_y = 3.375$ k Ans $\quad B_y = 1.69$ k Ans

$A_x = 1.875$ k Ans $\quad B_x = 3.75$ k Ans

$M_A = 16.9$ k · ft Ans $\quad M_B = 33.75$ k · ft Ans

$C_y = 0$ Ans $\quad D_y = 1.69$ k Ans

$C_x = 3.75$ k Ans $\quad D_x = 3.75$ k Ans

$M_C = 33.75$ k · ft Ans $\quad M_D = 33.75$ k · ft Ans

$E_y = 3.375$ k Ans

$E_x = 1.875$ k Ans

$M_E = 16.9$ k · ft Ans

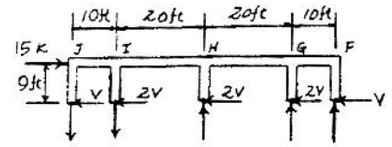

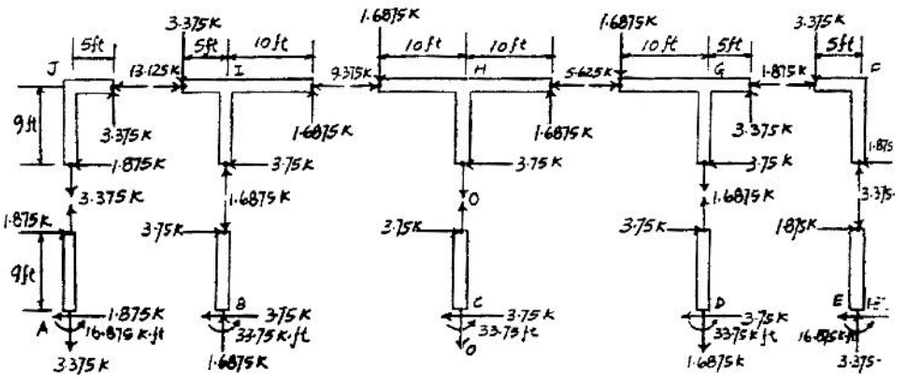

www.e-kitabi.com

© 2009 by R.C. Hibbeler. Published by Pearson Prentice Hall, Pearson Education, Inc., Upper Saddle River, NJ. All rights reserved. This material is protected under all copyright laws as they currently exist. No portion of this material may be reproduced, in any form or by any means, without permission in writing from the publisher.

7–25. Use the portal method and determine (approximately) the reactions at A, B, C, and D of the frame.

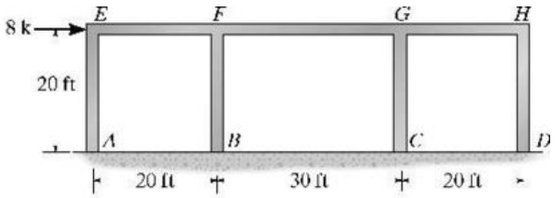

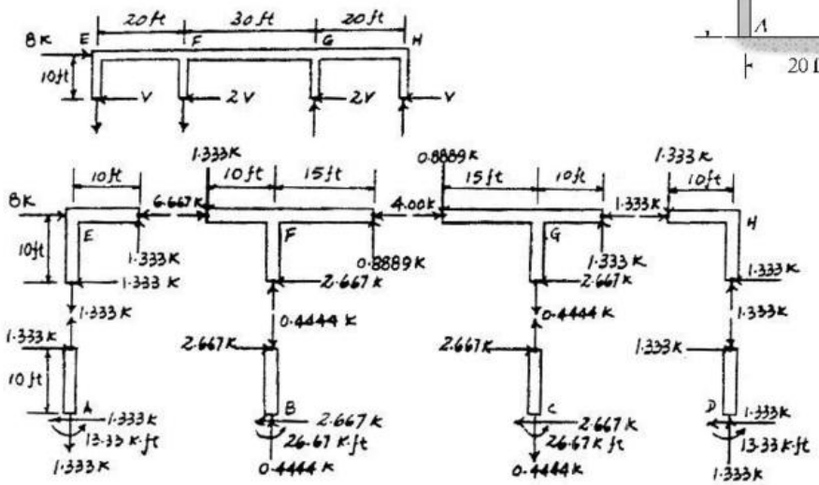

$\overset{+}{\rightarrow}\Sigma F_x = 0;$ $\quad -6V + 8 = 0$

$V = 1.333$ k

$A_y = 1.33$ k	Ans		$B_y = 0.444$ k	Ans	
$A_x = 1.33$ k	Ans		$B_x = 2.67$ k	Ans	
$M_A = 13.3$ k·ft	Ans		$M_B = 26.7$ k·ft	Ans	
$C_y = 0.444$ k	Ans		$D_y = 1.33$ k	Ans	
$C_x = 2.67$ k	Ans		$D_x = 1.33$ k	Ans	
$M_C = 26.7$ k·ft	Ans		$M_D = 13.3$ k·ft	Ans	

7–26. Draw (approximately) the moment diagram for the girder $EFGH$. Use the portal method.

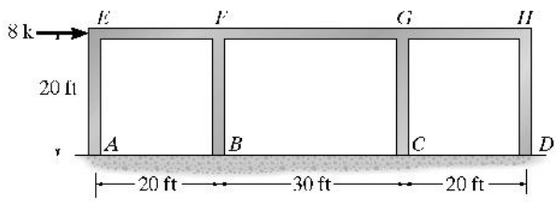

$M = \pm 13.3$ k·ft Ans

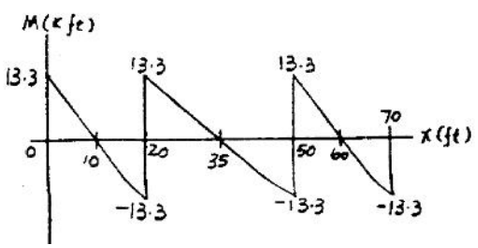

www.e-kitabi.com

© 2009 by R.C. Hibbeler. Published by Pearson Prentice Hall, Pearson Education, Inc., Upper Saddle River, NJ. All rights reserved. This material is protected under all copyright laws as they currently exist. No portion of this material may be reproduced, in any form or by any means, without permission in writing from the publisher.

7–27. Draw the moment diagram for girder *IJKL* of the building frame. Use the portal method of analysis.

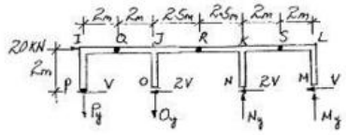

$\pm \Sigma F_x = 0 \quad 6V - 20 = 0 \quad V = 3.333\ \text{kN}$ **Ans**

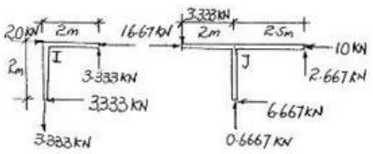

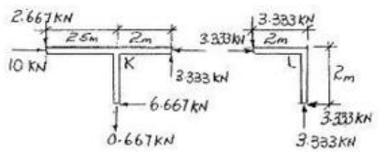

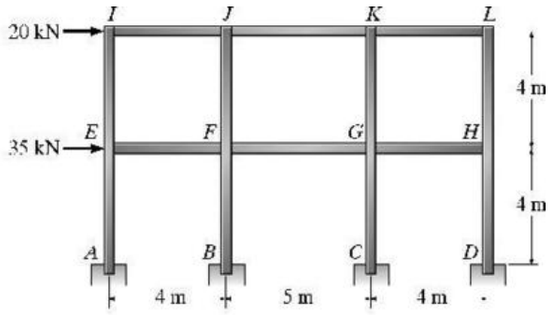

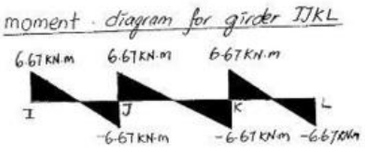

$M = \pm 6.67\ \text{kN}\cdot\text{m}$ **Ans**

***7–28.** Draw the moment diagram for girder *IJKL* of the building frame. Use the cantilever method of analysis. All columns have the same cross-sectional area.

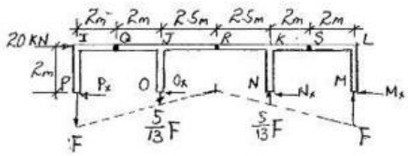

$+\circlearrowleft \Sigma M_p = 0 \quad \frac{5}{13}F(9) + F(13) - \frac{5}{13}F(4) - 20(2) = 0$ **Ans**

$F = 2.680\ \text{kN}$

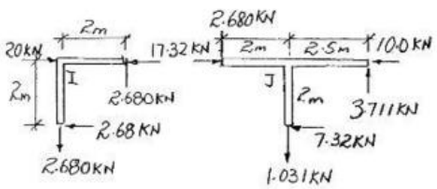

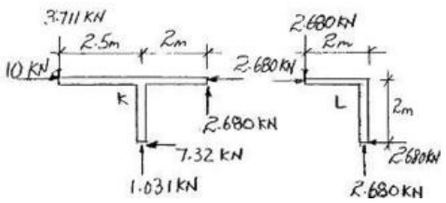

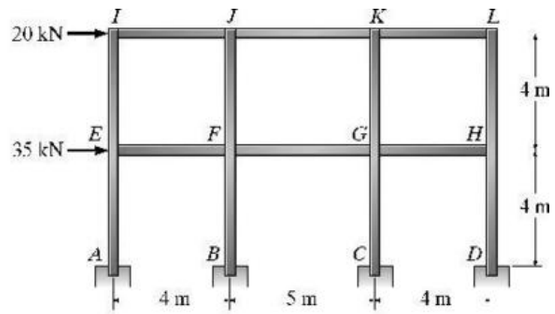

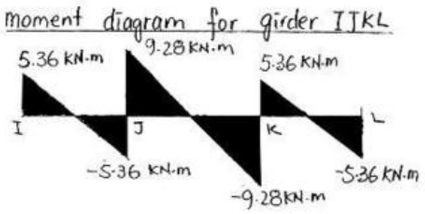

www.e-kitabi.com

c07.qxd 6/24/08 3:46 PM Page 201

© 2009 by R.C. Hibbeler. Published by Pearson Prentice Hall, Pearson Education, Inc., Upper Saddle River, NJ. All rights reserved. This material is protected under all copyright laws as they currently exist. No portion of this material may be reproduced, in any form or by any means, without permission in writing from the publisher.

7–29. Draw the moment diagram for girder *IJKL* of the building frame. Use the portal method of analysis.

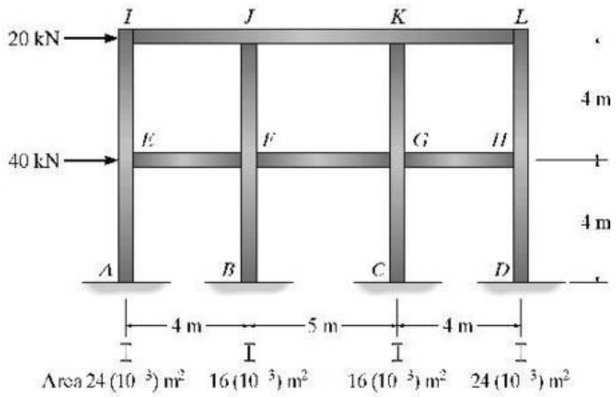

$\overset{+}{\rightarrow} \Sigma F_x = 0;\quad 10 - 6V = 0;\quad V = 1.667\ \text{kN}$

The equilibrium of each segment is shown on the FBDs.

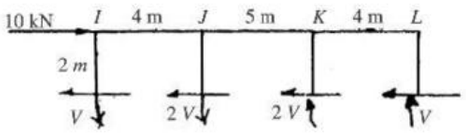

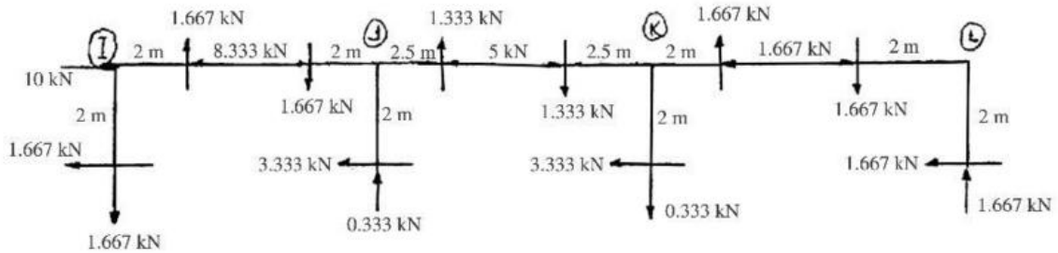

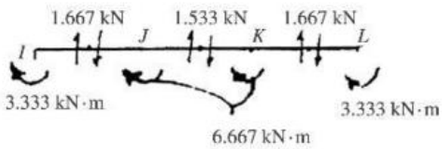

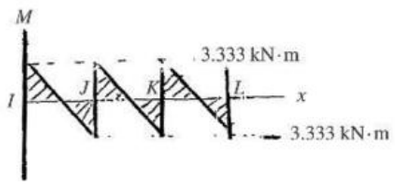

$M = \pm 3.33\ \text{kN·m}$ Ans

www.e-kitabi.com

© 2009 by R.C. Hibbeler. Published by Pearson Prentice Hall, Pearson Education, Inc., Upper Saddle River, NJ. All rights reserved. This material is protected under all copyright laws as they currently exist. No portion of this material may be reproduced, in any form or by any means, without permission in writing from the publisher.

***7–30.** Solve Prob. 7–29 using the cantilever method of analysis. Each column has the cross-sectional area indicated.

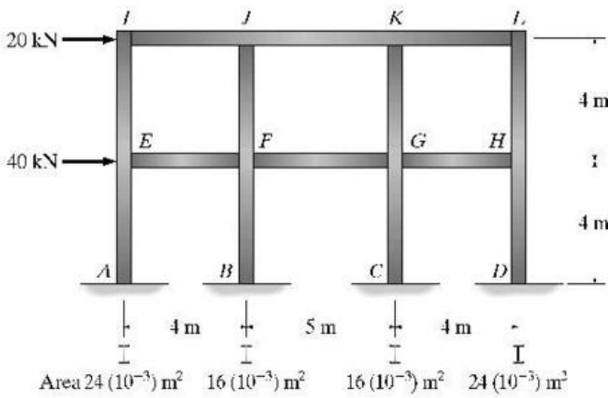

The centroid of column area is in center of framework. Since $\sigma = \frac{F}{A}$, then

$\sigma_1 = \left(\frac{6.5}{2.5}\right)\sigma_2$; $\quad \frac{F_1}{12} = \frac{6.5}{2.5}\left(\frac{F_2}{8}\right)$; $\quad F_1 = 3.90\,F_2$

$\sigma_4 = \sigma_1$: $\quad F_4 = F_1$

$\sigma_2 = \sigma_3$: $\quad F_2 = F_3$

$\left(+\Sigma M_M = 0\right)$: $\quad -2(10) - 4(F_1) + 9(F_2) + 13(3.90\,F_2) = 0$

$F_2 = 0.359$ k

$F_1 = 1.400$ k

The equilibrium of each segment is shown on the FBDs.

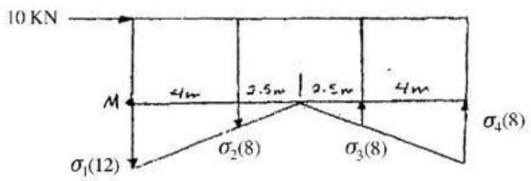

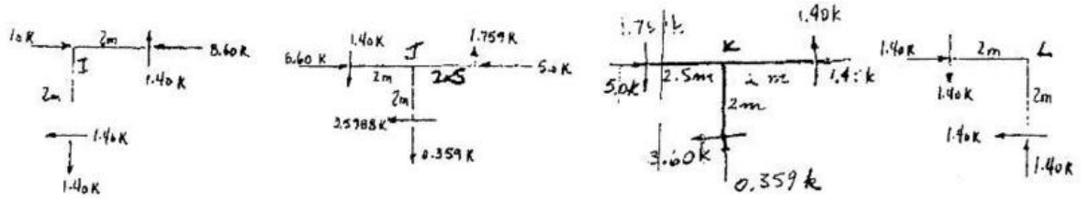

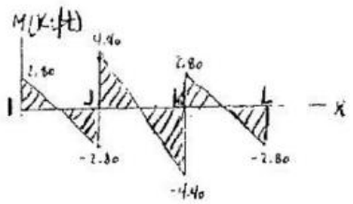

$M = \pm 4.40$ K.ft, ± 2.80 K.ft Ans

www.e-kitabi.com

c07.qxd 6/24/08 3:47 PM Page 203

© 2009 by R.C. Hibbeler. Published by Pearson Prentice Hall, Pearson Education, Inc., Upper Saddle River, NJ. All rights reserved. This material is protected under all copyright laws as they currently exist. No portion of this material may be reproduced, in any form or by any means, without permission in writing from the publisher.

7–31. Use the portal method and determine (approximately) the axial force, shear force, and moment at *A*.

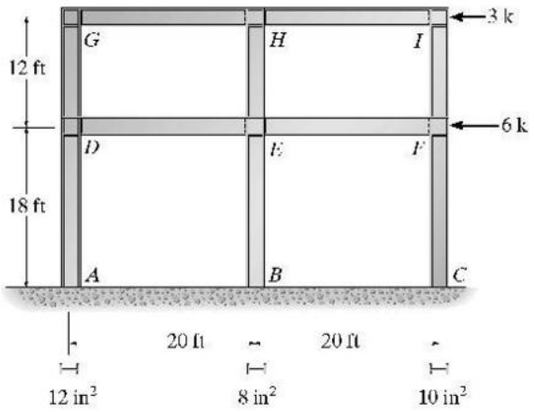

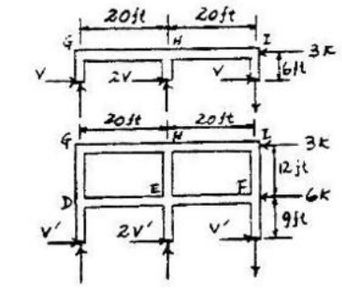

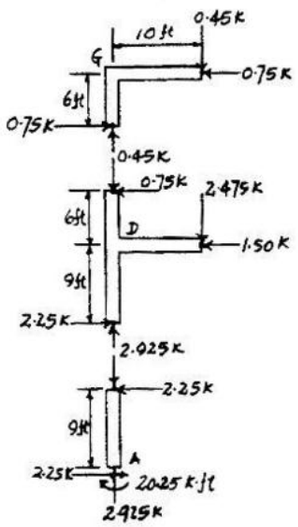

$\overset{+}{\rightarrow}\Sigma F_x = 0;$ $\quad 4V - 3 = 0$

$V = 0.75$ k

$\overset{+}{\rightarrow} F_x = 0;$ $\quad 4V' - 9 = 0$

$V' = 2.25$ k

$A_y = 2.925$ k Ans

$A_x = 2.25$ k Ans

$M_A = 20.25$ k·ft Ans

www.e-kitabi.com

c07.qxd 6/24/08 3:47 PM Page 204

© 2009 by R.C. Hibbeler. Published by Pearson Prentice Hall, Pearson Education, Inc., Upper Saddle River, NJ. All rights reserved. This material is protected under all copyright laws as they currently exist. No portion of this material may be reproduced, in any form or by any means, without permission in writing from the publisher.

***7–32.** Solve Prob. 7–31 using the cantilever method. Each column has the cross-sectional area indicated.

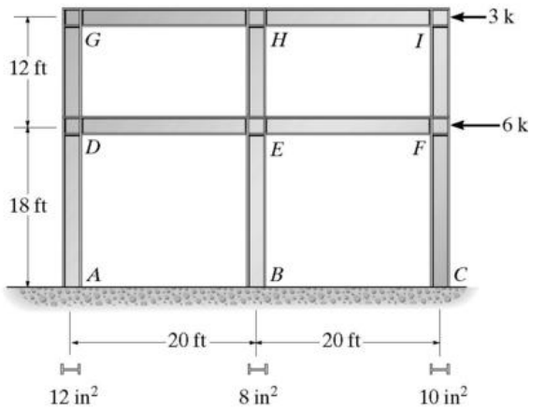

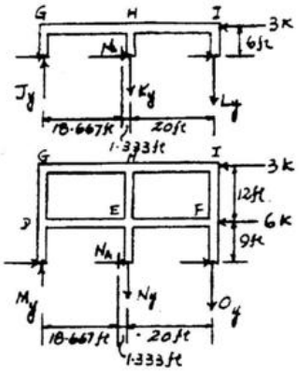

$$\bar{x} = \frac{8(20) + 10(40)}{30} = 18.667 \text{ ft}$$

$$\zeta + M_{NA} = 0; \quad -K_y(1.333) - L_y(21.333) - J_y(18.667) + 3(6) = 0$$

$$\sigma_K = \frac{1.333}{18.667}\sigma_J; \qquad \frac{K_y}{8} = \frac{1.333}{18.667}\left(\frac{J_y}{12}\right)$$

$$K_y = 0.04762\, J_y$$

$$\sigma_L = \frac{21.333}{18.667}\sigma_J; \qquad \frac{L_y}{10} = \frac{21.333}{18.667}\left(\frac{J_y}{12}\right)$$

$$L_y = 0.9524\, J_y$$

$$J_y = 0.461 \text{ k} \qquad K_y = 0.02195 \text{ k}$$

$$L_y = 0.439 \text{ k}$$

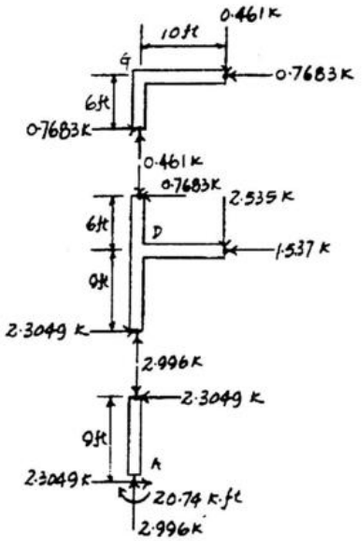

$$\zeta + \Sigma M_{NA} = 0; \qquad -M_y(18.667) - N_y(1.333) - O_y(21.333) + 6(9) + 3(21) = 0$$

$$N_y = 0.04762\, M_y \qquad O_y = 0.9524\, M_y$$

$$M_y = 2.9963 \text{ k} \qquad N_y = 0.1427 \text{ k}$$

$$O_y = 2.8537 \text{ k}$$

$$A_y = 3.00 \text{ k} \quad \textbf{Ans}$$
$$A_x = 2.30 \text{ k} \quad \textbf{Ans}$$
$$M_A = 20.7 \text{ k·ft} \quad \textbf{Ans}$$

www.e-kitabi.com

c07.qxd 6/24/08 3:47 PM Page 205

© 2009 by R.C. Hibbeler. Published by Pearson Prentice Hall, Pearson Education, Inc., Upper Saddle River, NJ. All rights reserved. This material is protected under all copyright laws as they currently exist. No portion of this material may be reproduced, in any form or by any means, without permission in writing from the publisher.

7–1P. The building bents shown in the photo are spaced 10 ft apart and can be assumed pin connected at all points of support. Use the idealized model shown and determine the anticipated wind loading on the bent. Note that the wind loading is transmitted from the wall to the four purlins, then to the columns on the right side. Do an approximate analysis and determine the maximum axial load and maximum moment in column AB. Assume the columns and knee braces are pinned at their ends. The building is located on flat terrain in New Orleans, Louisiana, where $V = 125$ mi/h. Take $I = 0.87$.

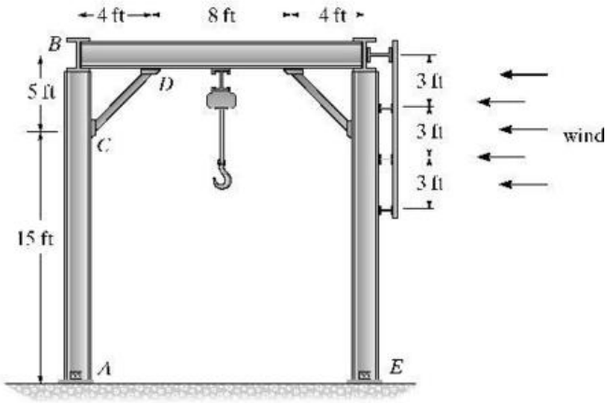

Wind loadings

$V = 125$ mph

$K_z = 1$

$q_z = 0.00256 K_z K_z V^2 I$

$= 0.00256 K_z (1)(125)^2(0.87) = 34.80 K_z$

$q_{z=15} = 34.80(0.85) = 29.58$ psf

$q_{z=20} = 34.80(0.90) = 31.32$ psf

$p = qGC_p - q_h(GC_{pi})$

$GC_{pi} = 0$

$G = 0.85$

$C_p = 0.8$

$p_{z=15'} = 29.58(0.85)(0.8) - 0 = 20.11$ psf

$p_{z=20'} = 31.32(0.85)(0.8) - 0 = 21.30$ psf

Distributed loading on bent is therefore

$w_{0-15'} = 20.11(10) = 201.0$ lb/ft

$w_{15'-20'} = 21.30(10) = 213.0$ lb/ft

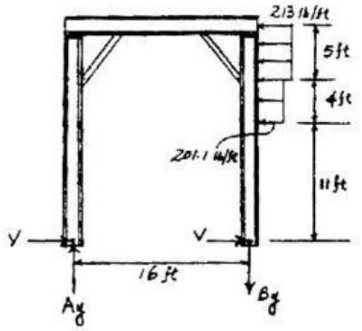

For the bent :

$$\frac{V}{2} + \frac{213.0(5) + 201.1(4)}{2} = 934.70 \text{ lb}$$

$$\zeta + \Sigma M_E = 0; \quad -A_y(16) + 201.1(4)(13) + 213.0(5)(17.5) = 0$$

$A_y = 1818.4$

For the column :

$$\zeta + \Sigma M_C = 0; \quad -B_x(5) + 934.7(15) = 0$$

$B_x = 2804$ lb

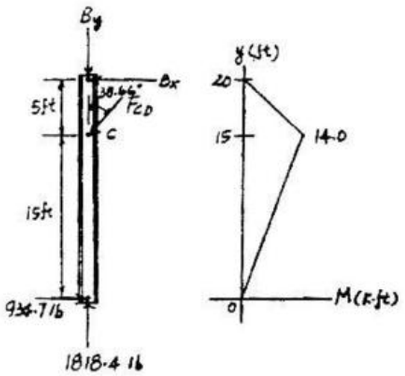

Maximum moment occurs at C :

$M_{max} = 934.70(15) = 14.0$ k · ft **Ans**

Maximum axial load occurs in region AC :

$N_{max} = 1.82$ k **Ans**

www.e-kitabi.com

c08.qxd 6/24/08 4:03 PM Page 207

© 2009 by R.C. Hibbeler. Published by Pearson Prentice Hall, Pearson Education, Inc., Upper Saddle River, NJ. All rights reserved. This material is protected under all copyright laws as they currently exist. No portion of this material may be reproduced, in any form or by any means, without permission in writing from the publisher.

8–1. Determine the equation of the elastic curve for the beam using the x coordinate that is valid for $0 \leq x < L/2$. Specify the slope at A and the beam's maximum deflection. EI is constant.

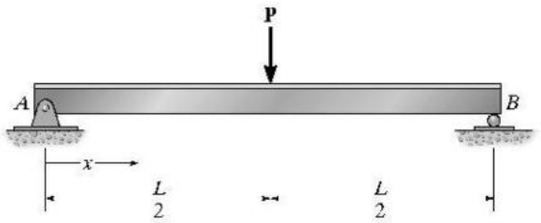

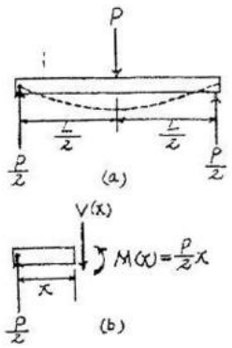

Support Reactions and Elastic Curve : As shown on FBD(a).

Moment Function : As shown on FBD(b).

Slope and Elastic Curve :

$$EI\frac{d^2v}{dx^2} = M(x)$$

$$EI\frac{d^2v}{dx^2} = \frac{P}{2}x$$

$$EI\frac{dv}{dx} = \frac{P}{4}x^2 + C_1 \qquad [1]$$

$$EI\,v = \frac{P}{12}x^3 + C_1x + C_2 \qquad [2]$$

Boundary Conditions : Due to symmetry, $\frac{dv}{dx} = 0$ at $x = \frac{L}{2}$.

Also, $v = 0$ at $x = 0$.

From Eq. [1] $\quad 0 = \frac{P}{4}\left(\frac{L}{2}\right)^2 + C_1 \qquad C_1 = -\frac{PL^2}{16}$

From Eq. [2] $\quad 0 = 0 + 0 + C_2 \qquad C_2 = 0$

The Slope : Substitute the value of C_1 into Eq. [1],

$$\frac{dv}{dx} = \frac{P}{16EI}\left(4x^2 - L^2\right)$$

$$\theta_A = \left.\frac{dv}{dx}\right|_{x=0} = -\frac{PL^2}{16EI} \qquad \textbf{Ans}$$

The negative sign indicates clockwise rotation.

The Elastic Curve : Substitute the values of C_1 and C_2 into Eq. [2],

$$v = \frac{Px}{48EI}\left(4x^2 - 3L^2\right) \qquad \textbf{Ans}$$

v_{max} occurs at $x = \frac{L}{2}$,

$$v_{max} = -\frac{PL^3}{48EI} \qquad \textbf{Ans}$$

The negative sign indicates downward displacement.

www.e-kitabi.com

© 2009 by R.C. Hibbeler. Published by Pearson Prentice Hall, Pearson Education, Inc., Upper Saddle River, NJ. All rights reserved. This material is protected under all copyright laws as they currently exist. No portion of this material may be reproduced, in any form or by any means, without permission in writing from the publisher.

8–2. Determine the equations of the elastic curve using the x_1 and x_2 coordinates. EI is constant.

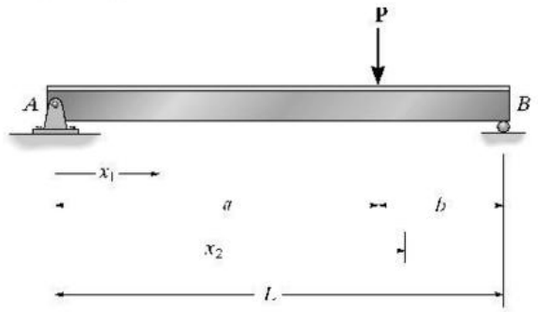

$$EI\frac{d^2v}{dx^2} = M(x)$$

For $M_1(x_1) = \frac{Pb}{L}x_1$; $EI\frac{d^2v_1}{dx_1^2} = \frac{Pb}{L}x_1$

$$EI\frac{dv_1}{dx_1} = \frac{Pb}{2L}x_1^2 + C_1 \qquad (1)$$

$$EIv_1 = \frac{Pb}{6L}x_1^3 + C_1x_1 + C_2 \qquad (2)$$

For $M_2(x_2) = \frac{Pb}{L}x_2 - P(x_2 - a)$

But $b = L - a$. Thus ; $M_2(x_2) = Pa(1 - \frac{x_2}{L})$

$$EI\frac{d^2v_2}{dx_2^2} = Pa(1 - \frac{x_2}{L})$$

$$EI\frac{dv_2}{dx_2} = Pa(x_2 - \frac{x_2^2}{2L}) + C_3 \qquad (3)$$

$$EIv_2 = Pa(\frac{x_2^2}{2} - \frac{x_2^3}{6L}) + C_3x_2 + C_4 \qquad (4)$$

Applying the boundary conditions :
$v_1 = 0$ at $x_1 = 0$
Therefore, $C_2 = 0$.
$v_2 = 0$ at $x_2 = L$

$$0 = \frac{PaL^2}{3} + C_3L + C_4 \qquad (5)$$

Applying the continuity conditions :
$v_1|_{x_1=a} = v_2|_{x_2=a}$

$$\frac{Pb}{6L}a^3 + C_1a = Pa(\frac{a^2}{2} - \frac{a^3}{6L}) + C_3a + C_4 \qquad (6)$$

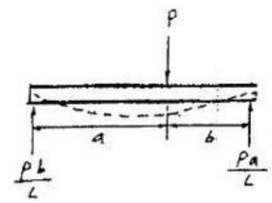

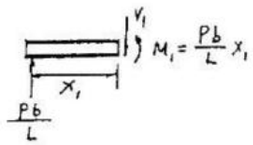

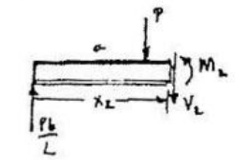

$$\left.\frac{dv_1}{dx_1}\right|_{x_1=a} = \left.\frac{dv_2}{dx_2}\right|_{x_2=a}$$

$$\frac{Pb}{2L}a^2 + C_1 = Pa(a - \frac{a^2}{2L}) + C_3 \qquad (7)$$

Solving Eqs. (5), (6) and (7) simultaneously yields :

$$C_1 = -\frac{Pb}{6L}(L^2 - b^2) \; ; \quad C_3 = -\frac{Pa}{6L}(2L^2 + a^2)$$

$$C_4 = \frac{Pa^3}{6}$$

Thus,

$$EIv_1 = \frac{Pb}{6L}x_1^3 - \frac{Pb}{6L}(L^2 - b^2)x_1$$

or

$$v_1 = \frac{Pb}{6EIL}(x_1^3 - (L^2 - b^2)x_1) \qquad \textbf{Ans}$$

and

$$EIv_2 = Pa(\frac{x_2^2}{2} - \frac{x_2^3}{6L}) - \frac{Pa}{6L}(2L^2 + a^2)x_2 + \frac{Pa^3}{6}$$

$$v_2 = \frac{Pa}{6EIL}[3x_2^2L - x_2^3 - (2L^2 + a^2)x_2 + a^2L] \qquad \textbf{Ans}$$

www.e-kitabi.com

© 2009 by R.C. Hibbeler. Published by Pearson Prentice Hall, Pearson Education, Inc., Upper Saddle River, NJ. All rights reserved. This material is protected under all copyright laws as they currently exist. No portion of this material may be reproduced, in any form or by any means, without permission in writing from the publisher.

8–3. Determine the equations of the elastic curve for the beam using the x_1 and x_2 coordinates. Specify the beam's maximum deflection. EI is constant.

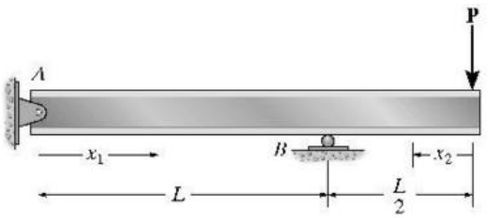

Support Reactions and Elastic Curve : As shown on FBD(a).

Moment Function : As shown on FBD(b) and (c).

Slope and Elastic Curve :

$$EI\frac{d^2v}{dx^2} = M(x)$$

For $M(x_1) = -\frac{P}{2}x_1$,

$$EI\frac{d^2v_1}{dx_1^2} = -\frac{P}{2}x_1$$

$$EI\frac{dv_1}{dx_1} = -\frac{P}{4}x_1^2 + C_1 \qquad [1]$$

$$EI\,v_1 = -\frac{P}{12}x_1^3 + C_1x_1 + C_2 \qquad [2]$$

For $M(x_2) = -Px_2$,

$$EI\frac{d^2v_2}{dx_2^2} = -Px_2$$

$$EI\frac{dv_2}{dx_2} = -\frac{P}{2}x_2^2 + C_3 \qquad [3]$$

$$EI\,v_2 = -\frac{P}{6}x_2^3 + C_3x_2 + C_4 \qquad [4]$$

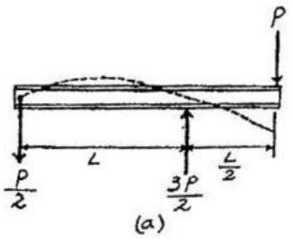

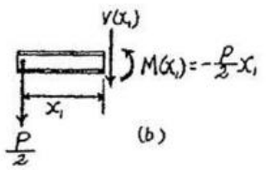

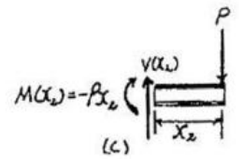

Boundary Conditions :

$v_1 = 0$ at $x_1 = 0$. From Eq. [2], $C_2 = 0$

$v_1 = 0$ at $x_1 = L$. From Eq. [2],

$$0 = -\frac{PL^3}{12} + C_1L \qquad C_1 = \frac{PL^2}{12}$$

$v_2 = 0$ at $x_2 = \frac{L}{2}$. From Eq. [4],

$$0 = -\frac{PL^3}{48} + \frac{L}{2}C_3 + C_4 \qquad [5]$$

Continuity Conditions :

At $x_1 = L$ and $x_2 = \frac{L}{2}$, $\frac{dv_1}{dx_1} = -\frac{dv_2}{dx_2}$. From Eqs. [1] and [3],

$$-\frac{PL^2}{4} + \frac{PL^2}{12} = -\left(-\frac{PL^2}{8} + C_3\right) \qquad C_3 = \frac{7PL^2}{24}$$

From Eq. [5], $C_4 = -\frac{PL^3}{8}$

The Slope : Substitute the value of C_1 into Eq. [1],

$$\frac{dv_1}{dx_1} = \frac{P}{12EI}\left(L^2 - 3x_1^2\right)$$

$$\frac{dv_1}{dx_1} = 0 = \frac{P}{12EI}\left(L^2 - 3x_1^2\right) \qquad x_1 = \frac{L}{\sqrt{3}}$$

The Elastic Curve : Substitute the values of C_1, C_2, C_3, and C_4 into Eqs. [2] and [4], respectively,

$$v_1 = \frac{Px_1}{12EI}\left(-x_1^2 + L^2\right) \qquad \text{Ans}$$

$$v_D = v_1\big|_{x_1 = \frac{L}{\sqrt{3}}} = \frac{P\left(\frac{L}{\sqrt{3}}\right)}{12EI}\left(-\frac{L^2}{3} + L^2\right) = \frac{0.0321PL^3}{EI}$$

$$v_2 = \frac{P}{24EI}\left(-4x_2^3 + 7L^2x_2 - 3L^3\right) \qquad \text{Ans}$$

$$v_C = v_2\big|_{x_2 = 0} = -\frac{PL^3}{8EI}$$

Hence, $v_{max} = v_C = \frac{PL^3}{8EI}$ Ans

www.e-kitabi.com

c08.qxd 6/24/08 4:03 PM Page 210

© 2009 by R.C. Hibbeler. Published by Pearson Prentice Hall, Pearson Education, Inc., Upper Saddle River, NJ. All rights reserved. This material is protected under all copyright laws as they currently exist. No portion of this material may be reproduced, in any form or by any means, without permission in writing from the publisher.

***8–4.** Determine the equations of the elastic curve for the beam using the x_1 and x_2 coordinates. Specify the slope at A and the maximum deflection. EI is constant.

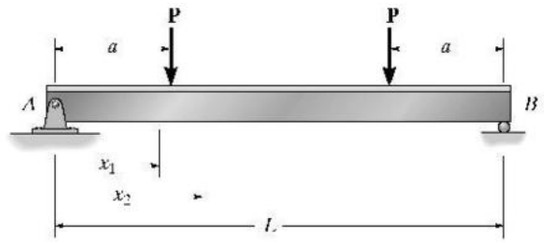

$$EI\frac{d^2v}{dx^2} = M(x)$$

For $M_1(x) = Px_1$

$$EI\frac{d^2v_1}{dx_1^2} = Px_1$$

$$EI\frac{dv_1}{dx_1} = \frac{Px_1^2}{2} + C_1 \qquad (1)$$

$$EIv_1 = \frac{Px_1^3}{6} + C_1x_1 + C_2 \qquad (2)$$

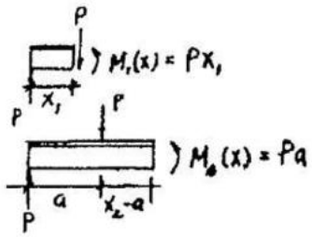

For $M_2(x) = Pa$

$$EI\frac{d^2v_2}{dx_2^2} = Pa$$

$$EI\frac{dv_2}{dx_2} = Pax_2 + C_3 \qquad (3)$$

$$EIv_2 = \frac{Pax_2^2}{2} + C_3x_2 + C_4 \qquad (4)$$

Boundary Conditions :

$$v_1 = 0 \quad \text{at} \quad x = 0$$

From Eq. (2)

$$C_2 = 0$$

Due to symmetry :

$$\frac{dv_2}{dx_2} = 0 \quad \text{at} \quad x_2 = \frac{L}{2}$$

From Eq. (3)

$$0 = Pa\frac{L}{2} + C_3$$

$$C_3 = -\frac{PaL}{2}$$

Continuity conditions :

$$v_1 = v_2 \quad \text{at} \quad x_1 = x_2 = a$$

$$\frac{Pa^3}{6} + C_1a = \frac{Pa^3}{2} - \frac{Pa^2L}{2} + C_4$$

$$C_1a - C_4 = \frac{Pa^3}{3} - \frac{Pa^2L}{2} \qquad (5)$$

$$\frac{dv_1}{dx_1} = \frac{dv_2}{dx_2} \quad \text{at} \quad x_1 = x_2 = a$$

$$\frac{Pa^2}{2} + C_1 = Pa^2 - \frac{PaL}{2}$$

$$C_1 = \frac{Pa^2}{2} - \frac{PaL}{2}$$

Substitute C_1 into Eq. (5)

$$C_4 = \frac{Pa^3}{6}$$

$$\frac{dv_1}{dx_1} = \frac{P}{2EI}(x_1^2 + a^2 - aL)$$

$$\theta_A = \left.\frac{dv_1}{dx_1}\right|_{x_1=0} = \frac{Pa(a-L)}{2EI} \qquad \text{Ans}$$

$$v_1 = \frac{Px_1}{6EI}[x_1^2 + 3a(a-L)] \qquad \text{Ans}$$

$$v_2 = \frac{Pa}{6EI}[3x(x-L) + a^2] \qquad \text{Ans}$$

$$v_{max} = v_2\Big|_{x=\frac{L}{2}} = \frac{Pa}{24EI}(4a^2 - 3L^2) \qquad \text{Ans}$$

www.e-kitabi.com

© 2009 by R.C. Hibbeler. Published by Pearson Prentice Hall, Pearson Education, Inc., Upper Saddle River, NJ. All rights reserved. This material is protected under all copyright laws as they currently exist. No portion of this material may be reproduced, in any form or by any means, without permission in writing from the publisher.

8–5. Determine the elastic curve for the cantilevered beam, which is subjected to the couple moment $\mathbf{M}_0$. Also compute the maximum slope and maximum deflection of the beam. EI is constant.

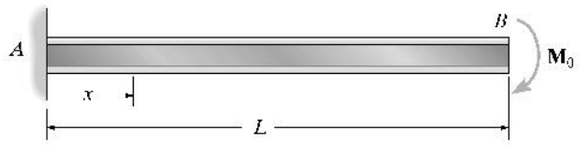

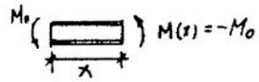

Elastic curve and slope :

$$EI\frac{d^2v}{dx^2} = M(x)$$

$$EI\frac{d^2v}{dx^2} = -M_0$$

$$EI\frac{dv}{dx} = -M_0x + C_1 \qquad (1)$$

$$EIv = \frac{-M_0x^2}{2} + C_1x + C_2 \qquad (2)$$

Boundary Conditions :

$$\frac{dv}{dx} = 0 \quad \text{at} \quad x = 0$$

From Eq. (1), $C_1 = 0$

$$v = 0 \quad \text{at} \quad x = 0$$

From Eq. (2), $C_2 = 0$

$$\frac{dv}{dx} = \frac{-M_0x}{EI}$$

$$\theta_{max} = \left.\frac{dv}{dx}\right|_{x=L} = \frac{-M_0L}{EI} \qquad \textbf{Ans}$$

The negative sign indicates clockwise rotation.

$$v = \frac{-M_0x^2}{2EI} \qquad \textbf{Ans}$$

$$v_{max} = v\Big|_{x=L} = -\frac{M_0L^2}{2EI} \qquad \textbf{Ans}$$

Negative sign indicates downward displacement.

8–6. Determine the maximum deflection of the beam and the slope at A. Use the method of double integration. EI is constant.

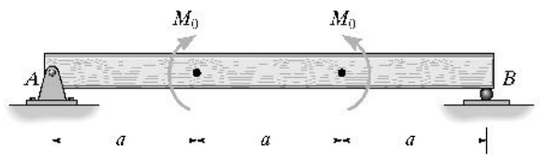

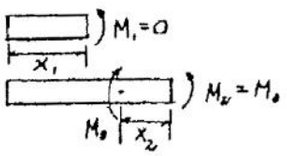

$M_1 = 0$

$$EI\frac{d^2v_1}{dx_1^2} = 0; \qquad EI\frac{dv_1}{dx_1} = C_1$$

$$EIv_1 = C_1x_1 + C_2$$

At $x_1 = 0$, $v_1 = 0$; $C_2 = 0$

$M_2 = M_0$; $\quad EI\dfrac{d^2v_2}{dx_2^2} = M_0$

$$EI\frac{dv_2}{dx_2} = M_0x_2 + C_3$$

$$EIv_2 = \frac{1}{2}M_0x_2^2 + C_3x_2 + C_4$$

At $x_2 = \dfrac{a}{2}$, $\dfrac{dv_2}{dx_2} = 0$; $\quad C_3 = \dfrac{-M_0a}{2}$

At $x_1 = a$, $x_2 = 0$, $\quad v_1 = v_2$, $\quad \dfrac{dv_1}{dx_1} = \dfrac{dv_2}{dx_2}$

$$C_1a = C_4$$

$$C_1 = \frac{-M_0a}{2}, \qquad C_4 = \frac{-M_0a^2}{2}$$

At $x_1 = 0$,

$$EI\frac{dv_1}{dx_1} = -\frac{M_0a}{2}$$

$$\theta_A = -\frac{M_0a}{2EI} \qquad \textbf{Ans}$$

At $x_2 = \dfrac{a}{2}$,

$$EIv_{max} = \frac{1}{2}M_0\left(\frac{a^2}{4}\right) - \frac{M_0a}{2}\left(\frac{a}{2}\right) - \frac{M_0a^2}{2}$$

$$v_{max} = -\frac{5M_0a^2}{8EI} \qquad \textbf{Ans}$$

www.e-kitabi.com

© 2009 by R.C. Hibbeler. Published by Pearson Prentice Hall, Pearson Education, Inc., Upper Saddle River, NJ. All rights reserved. This material is protected under all copyright laws as they currently exist. No portion of this material may be reproduced, in any form or by any means, without permission in writing from the publisher.

8–7. Determine the equation of the elastic curve using the coordinate x, and specify the slope at point A and the deflection at point C. EI is constant.

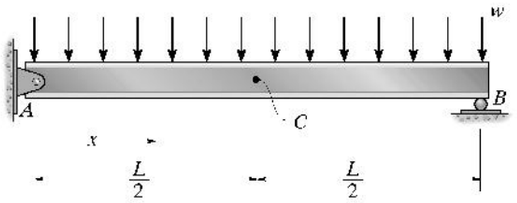

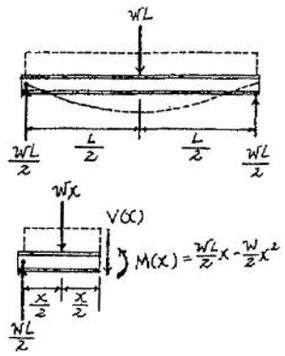

Support Reactions and Elastic Curve : As shown on FBD(a).

Moment Function : As shown on FBD(b).

Slope and Elastic Curve :

$$EI\frac{d^2v}{dx^2} = M(x)$$

$$EI\frac{d^2v}{dx^2} = \frac{wL}{2}x - \frac{w}{2}x^2$$

$$EI\frac{dv}{dx} = \frac{wL}{4}x^2 - \frac{w}{6}x^3 + C_1 \qquad [1]$$

$$EIv = \frac{wL}{12}x^3 - \frac{w}{24}x^4 + C_1x + C_2 \qquad [2]$$

Boundary Conditions : Due to symmetry, $\frac{dv}{dx} = 0$ at $x = \frac{L}{2}$.

Also, $v = 0$ at $x = 0$.

From Eq.[1], $0 = \frac{wL}{4}\left(\frac{L}{2}\right)^2 - \frac{w}{6}\left(\frac{L}{2}\right)^3 + C_1 \qquad C_1 = -\frac{wL^3}{24}$

From Eq.[2], $0 = 0 + 0 + C_2 \qquad C_2 = 0$

The Slope : Substituting the value of C_1 into Eq.[1],

$$\frac{dv}{dx} = \frac{w}{24EI}\left(-4x^3 + 6Lx^2 - L^3\right)$$

$$\theta_A = \left.\frac{dv}{dx}\right|_{x=0} = -\frac{wL^3}{24EI} \qquad \text{Ans}$$

The negative sign indicates clockwise rotation.

The Elastic Curve : Substituting the values of C_1 and C_2 into Eq.[2],

$$v = \frac{wx}{24EI}\left(-x^3 + 2Lx^2 - L^3\right) \qquad \text{Ans}$$

$$v_C = v|_{x=\frac{L}{2}} = -\frac{5wL^4}{384EI} \qquad \text{Ans}$$

The negative sign indicates downward displacement.

***8–8.** Determine the elastic curve for the simply supported beam, which is subjected to the couple moments $\mathbf{M}_0$. Also, compute the maximum slope and the maximum deflection of the beam. EI is constant.

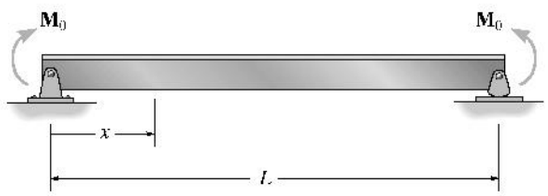

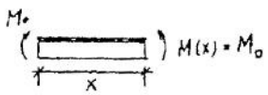

Elastic curve and slope :

$$EI\frac{d^2v}{dx^2} = M(x)$$

$$EI\frac{d^2v}{dx^2} = M_0$$

$$EI\frac{dv}{dx} = M_0x + C_1 \qquad (1)$$

$$EIv = \frac{M_0x^2}{2} + C_1x + C_2 \qquad (2)$$

Boundary Conditions :

$v = 0$ at $x = 0$

From Eq. (2), $C_2 = 0$

$v = 0$ at $x = L$

From Eq. (2),

$$0 = \frac{M_0L^2}{2} + C_1L$$

$$C_1 = \frac{-M_0L}{2}$$

$$\frac{dv}{dx} = \frac{M_0}{2EI}(2x - L)$$

$$|\theta_{max}| = |\theta_A| = |\theta_B| = \frac{M_0L}{2EI} \qquad \text{Ans}$$

$$v = \frac{M_0x}{2EI}(x - L) \qquad \text{Ans}$$

Due to symmetry, v_{max} occurs at $x = \frac{L}{2}$

$$v_{max} = -\frac{M_0L^2}{8EI} \qquad \text{Ans}$$

The negative sign indicates downward displacement.

www.e-kitabi.com

© 2009 by R.C. Hibbeler. Published by Pearson Prentice Hall, Pearson Education, Inc., Upper Saddle River, NJ. All rights reserved. This material is protected under all copyright laws as they currently exist. No portion of this material may be reproduced, in any form or by any means, without permission in writing from the publisher.

8–9. Determine the maximum slope and maximum deflection of the simply supported beam that is subjected to the couple moment $\mathbf{M}_0$. Use the method of double integration. EI is constant.

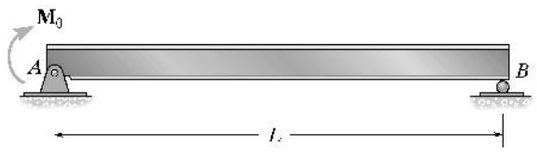

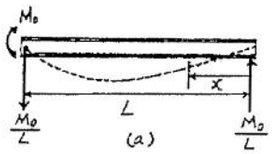

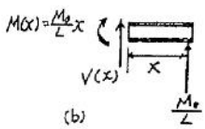

Support Reactions and Elastic Curve : As shown on FBD(a).
Moment Function : As shown on FBD(b).
Slope and Elastic Curve :

$$EI\frac{d^2v}{dx^2} = M(x)$$

$$EI\frac{d^2v}{dx^2} = \frac{M_0}{L}x$$

$$EI\frac{dv}{dx} = \frac{M_0}{2L}x^2 + C_1 \qquad [1]$$

$$EIv = \frac{M_0}{6L}x^3 + C_1x + C_2 \qquad [2]$$

Boundary Conditions :

$v = 0$ at $x = 0$. From Eq. [2],

$$0 = 0 + 0 + C_2 \qquad C_2 = 0$$

$v = 0$ at $x = L$. From Eq. [2],

$$0 = \frac{M_0}{6L}(L^3) + C_1(L) \qquad C_1 = -\frac{M_0L}{6}$$

The Slope : Substitute the value of C_1 into Eq. [1],

$$\frac{dv}{dx} = \frac{M_0}{6LEI}(3x^2 - L^2)$$

$$\frac{dv}{dx} = 0 = \frac{M_0}{6LEI}(3x^2 - L^2) \qquad x = \frac{\sqrt{3}}{3}L$$

$$\theta_B = \left.\frac{dv}{dx}\right|_{x=0} = -\frac{M_0L}{6EI}$$

$$\theta_{max} = \theta_A = \left.\frac{dv}{dx}\right|_{x=L} = \frac{M_0L}{3EI} \text{ clockwise} \qquad \textbf{Ans}$$

The Elastic Curve : Substituting the values of C_1 and C_2 into Eq. [2],

$$v = \frac{M_0}{6LEI}(x^3 - L^2x)$$

v_{max} occurs at $x = \frac{\sqrt{3}}{3}L$,

$$v_{max} = -\frac{\sqrt{3}M_0L^2}{27EI} \qquad \textbf{Ans}$$

The negative sign indicates downward displacement.

8–10. Use the moment-area theorems and determine the slope and deflection at B. EI is constant.

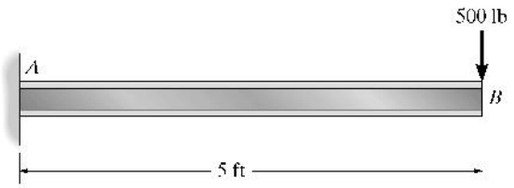

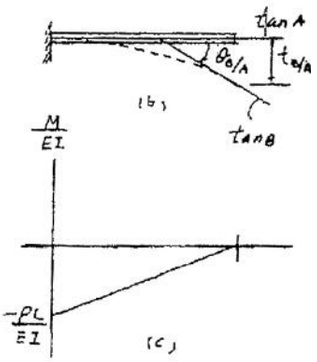

$$\theta_{B/A} = \frac{1}{2}\left(\frac{-PL}{EI}\right)(L) = \frac{-PL^2}{2EI} = \frac{PL^2}{2EI}$$

$$\theta_B = \theta_{B/A} + \theta_A$$

$$\theta_B = \frac{PL^2}{2EI} + 0 = \frac{-PL^2}{2EI} \qquad \textbf{Ans}$$

$$\Delta_B = |t_{B/A}| = \frac{1}{2}\left(\frac{-PL}{EI}\right)(L)\left(\frac{2L}{3}\right) = \frac{PL^3}{3EI} \qquad \textbf{Ans}$$

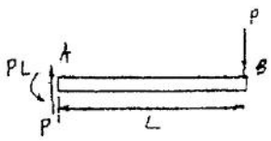

www.e-kitabi.com

c08.qxd 6/24/08 4:04 PM Page 214

© 2009 by R.C. Hibbeler. Published by Pearson Prentice Hall, Pearson Education, Inc., Upper Saddle River, NJ. All rights reserved. This material is protected under all copyright laws as they currently exist. No portion of this material may be reproduced, in any form or by any means, without permission in writing from the publisher.

8–11. Determine the slope at B and the maximum deflection of the beam. Assume A is a roller and B is a pin. Take $E = 29(10^3)$ ksi, $I = 500\ \text{in}^4$. Use the moment-area theorems.

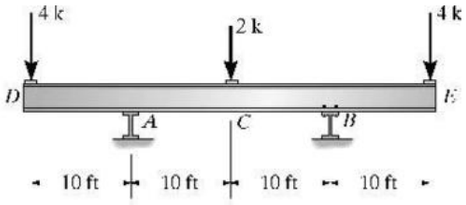

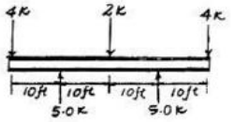

$$\theta_B = \theta_{C/B} = \left(\frac{1}{2}\right)\left(\frac{-30}{EI} + \frac{-40}{EI}\right)(10) = \frac{-350}{EI} = \frac{-350(144)}{29(10^3)(500)} = -0.00348 \text{ rad} \quad \textbf{Ans}$$

$$\Delta_C = \frac{t_{A/B}}{2} - t_{C/B}$$

$$t_{A/B} = 2\left(\frac{-40}{EI} + \frac{-30}{EI}\right)(10)\left(\frac{1}{2}\right)(10) = -\frac{7000}{EI}$$

$$t_{C/B} = \left(\frac{-30}{EI}\right)(10)(5) + \left(\frac{-10}{EI}\right)(10)\left(\frac{1}{2}\right)\left(\frac{2}{3}10\right) = \frac{-1833.33}{EI}$$

$$\Delta_C = -\frac{1666.67}{EI}$$

$$\Delta' = \frac{3}{2}t_{A/B}$$

$$\Delta_D = \Delta' - t_{D/B}$$

$$t_{D/B} = 2\left(\frac{-40}{EI} + \frac{-30}{EI}\right)(-10)\left(\frac{1}{2}\right)(20) + \left(\frac{-40}{EI}\right)(10)\left(\frac{1}{2}\right)\left(\frac{2}{3}10\right) = \frac{-15\,333.33}{EI}$$

$$\Delta_D = \frac{3}{2}\left(\frac{-7000}{EI}\right) - \left(\frac{-15\,333.33}{EI}\right)$$

$$\Delta_D = \frac{4833.33}{EI}$$

$$\Delta_D = \Delta_{\max} = \frac{4833.33(1728)}{29(10^3)(500)} = -0.576 \text{ in.} \quad \textbf{Ans}$$

Negative sign indicates that the direction of the slope is opposite to that shown on the diagram

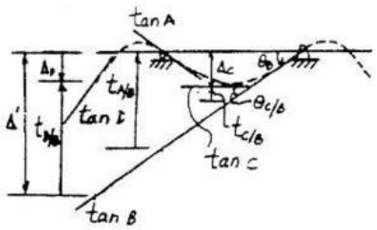

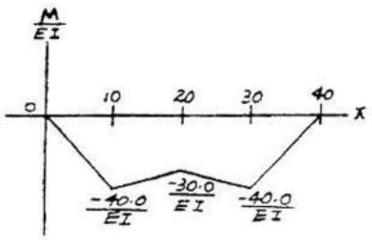

***8–12.** The beam is subjected to the two loads. Use the moment-area theorems and determine the slope and displacement at points A and B. EI is constant.

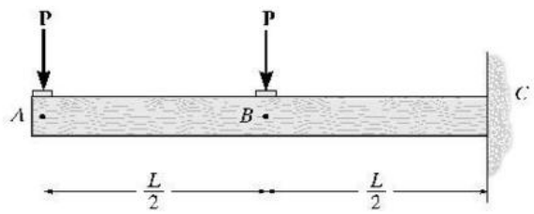

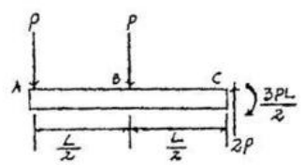

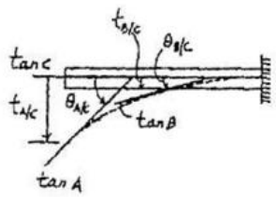

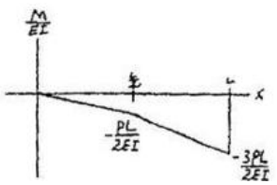

Moment-Area Theorems : The slope at support C is zero. The slopes at A and B are,

$$\theta_A = |\theta_{A/C}| = \frac{1}{2}\left(-\frac{PL}{2EI}\right)\left(\frac{L}{2}\right) + \left(-\frac{PL}{2EI}\right)\left(\frac{L}{2}\right) + \frac{1}{2}\left(-\frac{PL}{EI}\right)\left(\frac{L}{2}\right)$$
$$= \frac{5PL^2}{8EI} \quad \textbf{Ans}$$

$$\theta_B = |\theta_{B/C}| = \left(-\frac{PL}{2EI}\right)\left(\frac{L}{2}\right) + \frac{1}{2}\left(-\frac{PL}{EI}\right)\left(\frac{L}{2}\right) = \frac{PL^2}{2EI} \quad \textbf{Ans}$$

The displacements at A and B are,

$$\Delta_A = |t_{A/C}| = \frac{1}{2}\left(-\frac{PL}{2EI}\right)\left(\frac{L}{2}\right)\left(\frac{L}{3}\right) + \left(-\frac{PL}{2EI}\right)\left(\frac{L}{2}\right)\left(\frac{L}{2} + \frac{L}{4}\right)$$
$$+ \frac{1}{2}\left(-\frac{PL}{EI}\right)\left(\frac{L}{2}\right)\left(\frac{L}{2} + \frac{L}{3}\right)$$
$$= \frac{7PL^3}{16EI} \downarrow \quad \textbf{Ans}$$

$$\Delta_B = |t_{B/C}| = \left(-\frac{PL}{2EI}\right)\left(\frac{L}{2}\right)\left(\frac{L}{4}\right) + \frac{1}{2}\left(-\frac{PL}{EI}\right)\left(\frac{L}{2}\right)\left(\frac{L}{3}\right)$$
$$= \frac{7PL^3}{48EI} \downarrow \quad \textbf{Ans}$$

www.e-kitabi.com

c08.qxd 6/24/08 4:04 PM Page 215

© 2009 by R.C. Hibbeler. Published by Pearson Prentice Hall, Pearson Education, Inc., Upper Saddle River, NJ. All rights reserved. This material is protected under all copyright laws as they currently exist. No portion of this material may be reproduced, in any form or by any means, without permission in writing from the publisher.

8–13. The beam is subjected to the loading shown. Use the moment-area theorems and determine the slope at A and the displacement at C. Assume the support at A is a pin and B is a roller. EI is constant.

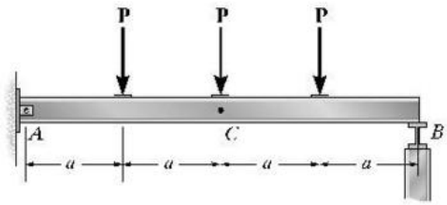

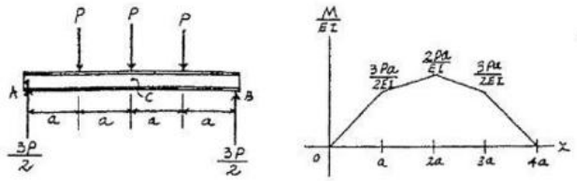

Support Reactions and Elastic Curve : As shown.

M/EI Diagram : As shown.

Moment-Area Theorems : Due to symmetry, the slope at midspan (point C) is zero. Hence the slope at A is

$$\theta_A = \theta_{A/C} = \frac{1}{2}\left(\frac{3Pa}{2EI}\right)(a) + \left(\frac{3Pa}{2EI}\right)(a) + \frac{1}{2}\left(\frac{Pa}{2EI}\right)(a)$$
$$= \frac{5Pa^2}{2EI} \qquad \text{Ans}$$

The displacement at C is

$$\Delta_C = t_{A/C} = \frac{1}{2}\left(\frac{3Pa}{2EI}\right)(a)\left(\frac{2a}{3}\right) + \left(\frac{3Pa}{2EI}\right)\left(a + \frac{a}{2}\right)$$
$$+ \frac{1}{2}\left(\frac{Pa}{2EI}\right)(a)\left(a + \frac{2a}{3}\right)$$
$$= \frac{19Pa^3}{6EI} \downarrow \qquad \text{Ans}$$

8–14. The beam is subjected to the load **P** as shown. Use the moment-area theorems and determine the magnitude of force **F** that must be applied at the end of the overhang C so that the displacement at C is zero. EI is constant.

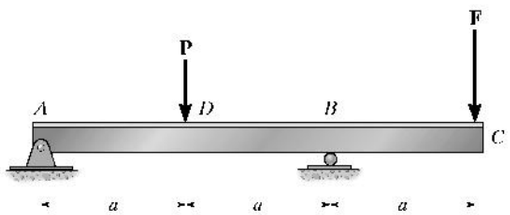

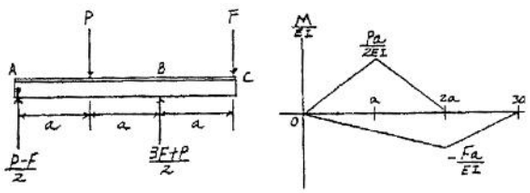

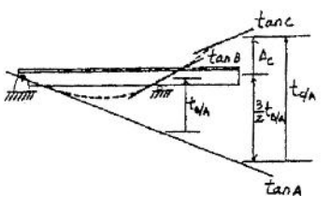

Support Reactions and Elastic Curve : As shown.

M/EI Diagram : As shown.

Moment-Area Theorems :

$$t_{B/A} = \frac{1}{2}\left(\frac{Pa}{2EI}\right)(2a)(a) + \frac{1}{2}\left(-\frac{Fa}{EI}\right)(2a)\left(\frac{2}{3}a\right) = \frac{a^3}{6EI}(3P - 4F)$$

$$t_{C/A} = \frac{1}{2}\left(\frac{Pa}{2EI}\right)(2a)(a+a) + \frac{1}{2}\left(-\frac{Fa}{EI}\right)(2a)\left(a + \frac{2}{3}a\right)$$
$$+ \frac{1}{2}\left(-\frac{Fa}{EI}\right)(a)\left(\frac{2}{3}a\right)$$
$$= \frac{a^3}{EI}(P - 2F)$$

Require $\Delta_C = 0$, then

$$\Delta_C = 0 = |t_{C/A}| - \left|\frac{3}{2}t_{B/A}\right|$$
$$0 = \frac{a^3}{EI}(P - 2F) - \frac{3}{2}\left[\frac{a^3}{6EI}(3P - 4F)\right]$$
$$F = \frac{P}{4} \qquad \text{Ans}$$

www.e-kitabi.com

c08.qxd 6/24/08 4:04 PM Page 216

© 2009 by R.C. Hibbeler. Published by Pearson Prentice Hall, Pearson Education, Inc., Upper Saddle River, NJ. All rights reserved. This material is protected under all copyright laws as they currently exist. No portion of this material may be reproduced, in any form or by any means, without permission in writing from the publisher.

8–15. The beam is subjected to the load **P** as shown. If **F** = **P**, determine the displacement at *D*. Use the moment-area theorems. *EI* is constant.

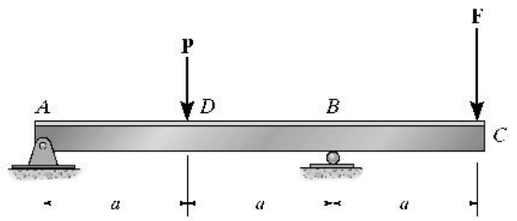

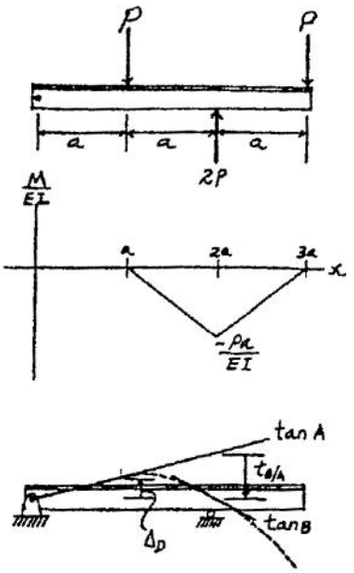

Support Reactions and Elastic Curve : As shown.

M/EI Diagram : As shown.

Moment-Area Theorems :

$$t_{B/A} = \frac{1}{2}\left(-\frac{Pa}{EI}\right)(a)\left(\frac{a}{3}\right) = -\frac{Pa^3}{6EI}$$

$$t_{D/A} = 0$$

The displacement at *D* is

$$\Delta_D = \frac{1}{2}|t_{B/A}| - |t_{D/A}|$$

$$= \frac{1}{2}\left(\frac{Pa^3}{6EI}\right) - 0$$

$$= \frac{Pa^3}{12EI} \uparrow \qquad \textbf{Ans}$$

***8–16.** Determine the slope at *B* and the maximum deflection of the beam. Take $E = 29(10^3)$ ksi, $I = 500\ \text{in}^4$. Use the moment-area theorems.

$$\theta_B = \frac{1}{2}\left(\frac{90}{EI}\right)(6\ \text{ft}) = \frac{270}{EI} = \frac{270(12)^2}{(29)(10^3)(500)} = 2.68(10^{-3})\ \text{rad} \qquad \textbf{Ans}$$

$$\Delta_C = \frac{1}{2}\left(\frac{90}{EI}\right)(6\ \text{ft})(10\ \text{ft}) = \frac{2700}{EI} = \frac{2700(12)^3}{29(10^3)(500)} = 0.322\ \text{in.} \qquad \textbf{Ans}$$

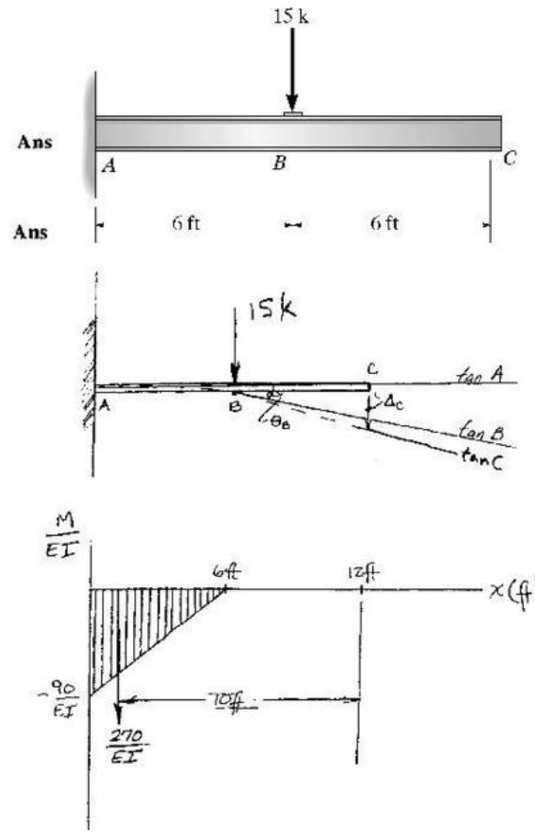

$$\theta_B = \theta_{B/A} = \frac{1}{2}\left(\frac{-Pa}{EI}\right)(a) + \frac{1}{2}\left[-\frac{3Pa}{EI} - \frac{2Pa}{EI}\right](a)$$

$$= \frac{3Pa^2}{EI} \qquad \textbf{Ans}$$

$$\Delta_C = \frac{1}{2}(a)\left(\frac{-2Pa}{EI}\right)(a) + \frac{2}{3}(a)\left[\left(\frac{1}{2}\right)\frac{-Pa}{EI}\right](a)$$

$$= \frac{4Pa^3}{3EI} \qquad \textbf{Ans}$$

www.e-kitabi.com

c08.qxd 6/24/08 4:04 PM Page 217

© 2009 by R.C. Hibbeler. Published by Pearson Prentice Hall, Pearson Education, Inc., Upper Saddle River, NJ. All rights reserved. This material is protected under all copyright laws as they currently exist. No portion of this material may be reproduced, in any form or by any means, without permission in writing from the publisher.

8–17. At what distance a should the bearing supports at A and B be placed so that the deflection at the center of the shaft is equal to the deflection at its ends? Use the moment-area theorems. The bearings exert only vertical reactions on the shaft. EI is constant.

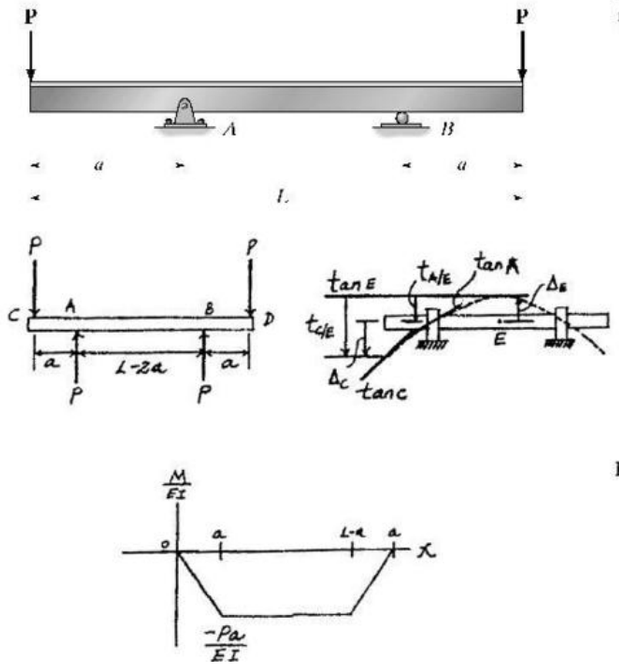

Support Reactions and Elastic Curve : As shown.

M/EI Diagram : As shown.

Moment - Area Theorems : Due to symmetry, the slope at midspan (point E) is zero.

$$\Delta_E = |t_{A/E}| = \left(-\frac{Pa}{EI}\right)\left(\frac{L-2a}{2}\right)\left(\frac{L-2a}{4}\right) = \frac{Pa}{8EI}(L-2a)^2$$

$$t_{C/E} = \left(-\frac{Pa}{EI}\right)\left(\frac{L-2a}{2}\right)\left(a+\frac{L-2a}{4}\right)+\frac{1}{2}\left(-\frac{Pa}{EI}\right)(a)\left(\frac{2}{3}a\right)$$
$$= -\frac{Pa}{24EI}\left(3L^2-4a^2\right)$$

$$\Delta_C = |t_{C/E}| - |t_{A/E}|$$
$$= \frac{Pa}{24EI}\left(3L^2-4a^2\right) - \frac{Pa}{8EI}(L-2a)^2$$
$$= \frac{Pa^2}{6EI}(3L-4a)$$

Require, $\Delta_E = \Delta_C$, then,

$$\frac{Pa}{8EI}(L-2a)^2 = \frac{Pa^2}{6EI}(3L-4a)$$
$$28a^2 - 24aL + 3L^2 = 0$$

$$a = 0.152L \qquad \textbf{Ans}$$

8–18. The beam is subjected to the loading shown. Use the moment-area theorems and determine the slope at B and deflection at C. EI is constant.

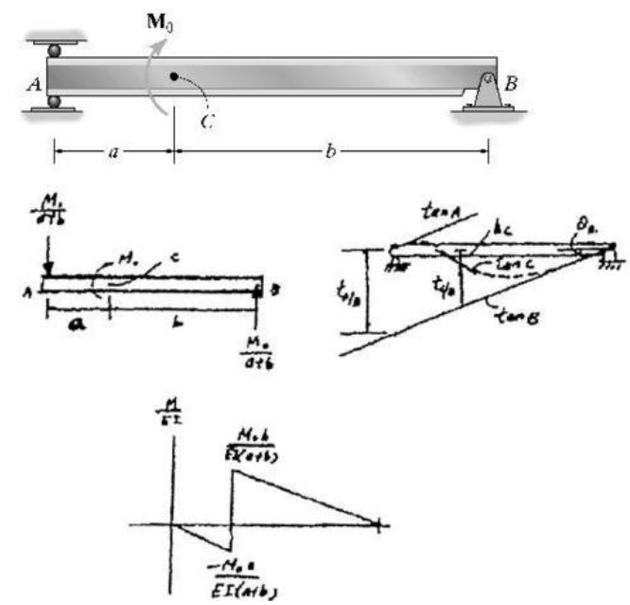

The slope :

$$t_{A/B} = \frac{1}{2}\left(\frac{-M_0 a}{EI(a+b)}\right)(a)\left(\frac{2}{3}a\right) + \frac{1}{2}\left(\frac{M_0 b}{EI(a+b)}\right)(b)\left(a+\frac{b}{3}\right)$$
$$= \frac{M_0(b^3+3ab^2-2a^3)}{6EI(a+b)}$$

$$\theta_B = \frac{t_{A/B}}{a+b} = \frac{M_0(b^3+3ab^2-2a^3)}{6EI(a+b)^2} \qquad \textbf{Ans}$$

The deflection :

$$t_{C/B} = \frac{1}{2}\left(\frac{M_0 b}{EI(a+b)}\right)(b)\left(\frac{b}{3}\right) = \frac{M_0 b^3}{6EI(a+b)}$$

$$\Delta_C = \left(\frac{b}{a+b}\right) t_{A/B} - t_{C/B}$$
$$= \frac{M_0 b\,(b^3+3ab^2-2a^3)}{6EI(a+b)^2} - \frac{M_0 b^3}{6EI(a+b)}$$
$$= \frac{M_0 a\,b(b-a)}{3EI(a+b)} \qquad \textbf{Ans}$$

www.e-kitabi.com

© 2009 by R.C. Hibbeler. Published by Pearson Prentice Hall, Pearson Education, Inc., Upper Saddle River, NJ. All rights reserved. This material is protected under all copyright laws as they currently exist. No portion of this material may be reproduced, in any form or by any means, without permission in writing from the publisher.

8–19. The shaft is subjected to the loading shown. If the bearings at A and B only exert vertical reactions on the shaft, determine the slope at A and the displacement at C. Use the moment-area theorems. EI is constant.

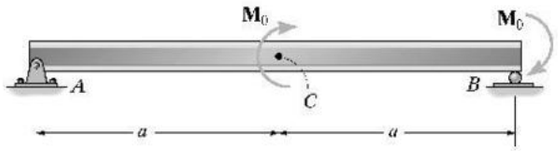

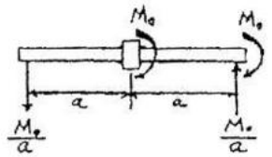

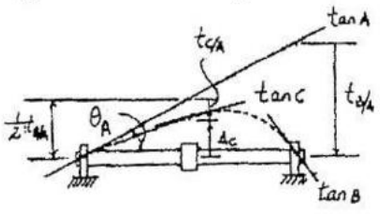

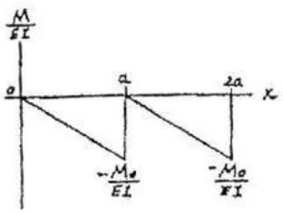

M/EI Diagram : As shown.

Moment-Area Theorems :

$$t_{B/A} = \frac{1}{2}\left(-\frac{M_0}{EI}\right)(a)\left(\frac{a}{3}\right) + \frac{1}{2}\left(-\frac{M_0}{EI}\right)(a)\left(a + \frac{a}{3}\right) = -\frac{5M_0a^2}{6EI}$$

$$t_{C/A} = \frac{1}{2}\left(-\frac{M_0}{EI}\right)(a)\left(\frac{a}{3}\right) = -\frac{M_0a^2}{6EI}$$

The slope at A is

$$\theta_A = \frac{|t_{B/A}|}{L} = \frac{\frac{5M_0a^2}{6EI}}{2a} = \frac{5M_0a}{12EI} \qquad \textbf{Ans}$$

The displacement at C is

$$\Delta_C = \left|\frac{1}{2}t_{B/A}\right| - |t_{C/A}| = \frac{1}{2}\left(\frac{5M_0a^2}{6EI}\right) - \frac{M_0a^2}{6EI} = \frac{M_0a^2}{4EI}\ \downarrow \qquad \textbf{Ans}$$

***8–20.** Use the moment-area theorems and determine the slope at B and the deflection at C. EI is constant.

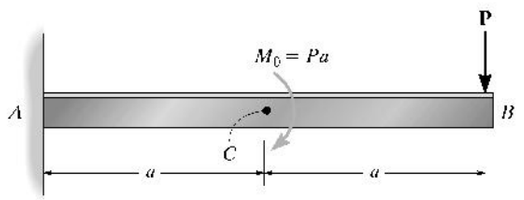

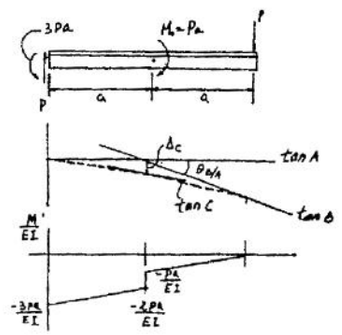

$$\theta_B = \theta_{B/A} = \frac{1}{2}\left(\frac{-Pa}{EI}\right)(a) + \frac{1}{2}\left[-\frac{3Pa}{EI} - \frac{2Pa}{EI}\right](a)$$

$$= \frac{3Pa^2}{EI} \qquad \textbf{Ans}$$

$$\Delta_C = \frac{1}{2}(a)\left(\frac{-2Pa}{EI}\right)(a) + \frac{2}{3}(a)\left[\left(\frac{1}{2}\right)\frac{-Pa}{EI}\right](a)$$

$$= \frac{4Pa^3}{3EI} \qquad \textbf{Ans}$$

www.e-kitabi.com

c08.qxd 6/24/08 4:04 PM Page 219

© 2009 by R.C. Hibbeler. Published by Pearson Prentice Hall, Pearson Education, Inc., Upper Saddle River, NJ. All rights reserved. This material is protected under all copyright laws as they currently exist. No portion of this material may be reproduced, in any form or by any means, without permission in writing from the publisher.

8–21. Use the moment-area theorems and determine the deflection at C and the slope of the beam at A, B, and C. EI is constant.

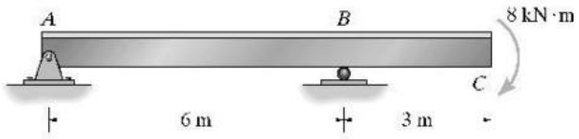

$$t_{B/A} = \frac{1}{2}\left(\frac{-8}{EI}\right)(6)(2) = \frac{-48}{EI}$$

$$t_{C/A} = \frac{1}{2}\left(\frac{-8}{EI}\right)(6)(3+2) + \left(\frac{-8}{EI}\right)(3)(1.5) = \frac{-156}{EI}$$

$$\Delta_C = |t_{C/A}| - \frac{9}{6}(|t_{B/A}|) = \frac{156}{EI} - \frac{9(48)}{6(EI)} = \frac{84}{EI} \downarrow \quad \text{Ans}$$

$$\theta_A = \frac{|t_{B/A}|}{6} = \frac{8}{EI} \quad \text{Ans}$$

$$\theta_{B/A} = \frac{1}{2}\left(\frac{-8}{EI}\right)(6) = \frac{-24}{EI} = \frac{24}{EI}$$

$$\theta_B = \theta_{B/A} + \theta_A$$

$$\theta_B = \frac{24}{EI} - \frac{8}{EI} = \frac{16}{EI} \quad \text{Ans}$$

$$\theta_{C/A} = \frac{1}{2}\left(\frac{-8}{EI}\right)(6) + \left(\frac{-8}{EI}\right)(3) = \frac{-48}{EI} = \frac{48}{EI}$$

$$\theta_C = \theta_{C/A} + \theta_A$$

$$\theta_C = \frac{48}{EI} - \frac{8}{EI} = \frac{40}{EI} \quad \text{Ans}$$

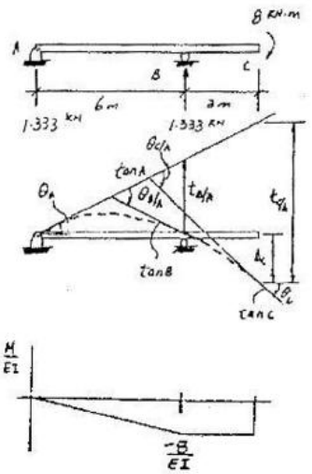

8–22. Use the moment-area theorems and determine the slope at C and the deflection at B. EI is constant.

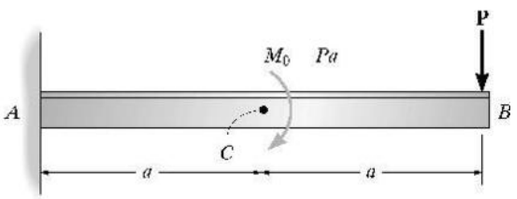

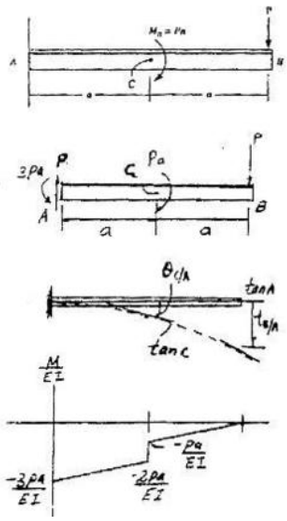

$$\theta_{C/A} = \left(-\frac{2Pa}{EI}\right)a + \frac{1}{2}\left(-\frac{Pa}{EI}\right)a = \left(-\frac{5Pa^2}{2EI}\right) = \left(\frac{5Pa^2}{2EI}\right)$$

$$\theta_C = \theta_{C/A}$$

$$\theta_C = \frac{5Pa^2}{2EI} \quad \text{Ans}$$

$$\Delta_B = |t_{B/A}| = \frac{1}{2}\left(\frac{Pa}{EI}\right)(a)\left(\frac{2a}{3}\right) + \frac{1}{2}\left(\frac{Pa}{EI}\right)a\left(a + \frac{2a}{3}\right) + \left(\frac{2Pa}{EI}\right)(a)\left(a + \frac{a}{2}\right)$$

$$= \frac{25Pa^3}{6EI} \downarrow \quad \text{Ans}$$

www.e-kitabi.com

© 2009 by R.C. Hibbeler. Published by Pearson Prentice Hall, Pearson Education, Inc., Upper Saddle River, NJ. All rights reserved. This material is protected under all copyright laws as they currently exist. No portion of this material may be reproduced, in any form or by any means, without permission in writing from the publisher.

8–23. Use the moment-area theorems and determine the value of a so that the slope at A is equal to zero. EI is constant.

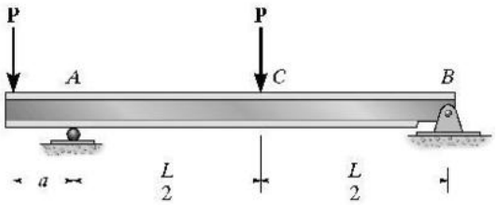

Moment-Area Theorems :

$$(\theta_A)_1 = (\theta_{A/C})_1 = \frac{1}{2}\left(\frac{PL}{4EI}\right)\left(\frac{L}{2}\right) = \frac{PL^2}{16EI}$$

$$(t_{B/A})_2 = \frac{1}{2}\left(-\frac{Pa}{EI}\right)(L)\left(\frac{2}{3}L\right) = -\frac{PaL^2}{3EI}$$

$$(\theta_A)_2 = \frac{|(t_{B/A})_2|}{L} = \frac{\frac{PaL^2}{3EI}}{L} = \frac{PaL}{3EI}$$

Require, $\theta_A = 0 = (\theta_A)_1 - (\theta_A)_2$

$$0 = \frac{PL^2}{16EI} - \frac{PaL}{3EI}$$

$$a = \frac{3}{16}L \qquad \text{Ans}$$

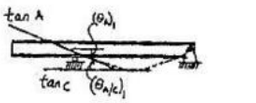

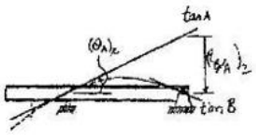

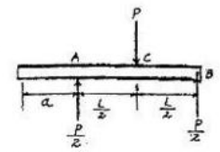

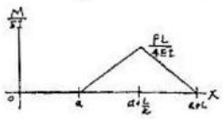

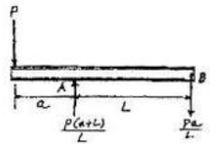

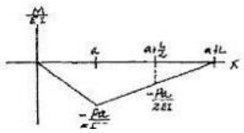

***8–24.** Use the moment-area theorems and determine the slope at C and displacement at B. EI is constant.

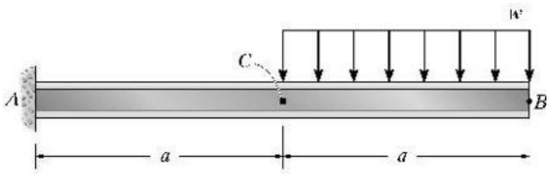

Support Reactions and Elastic Curve : As shown.

M/EI Diagram : As shown.

Moment-Area Theorems : The slope at support A is zero. The slope at C is

$$\theta_C = |\theta_{C/A}| = \frac{1}{2}\left(-\frac{wa^2}{EI}\right)(a) + \left(-\frac{wa^2}{2EI}\right)(a)$$

$$= \frac{wa^3}{EI} \qquad \text{Ans}$$

The displacement at B is

$$\Delta_B = |t_{B/A}| = \frac{1}{2}\left(-\frac{wa^2}{EI}\right)(a)\left(a+\frac{2}{3}a\right) + \left(-\frac{wa^2}{2EI}\right)(a)\left(a+\frac{a}{2}\right)$$

$$+\frac{1}{3}\left(-\frac{wa^2}{2EI}\right)(a)\left(\frac{3}{4}a\right)$$

$$= \frac{41wa^4}{24EI} \downarrow \qquad \text{Ans}$$

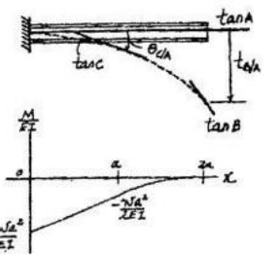

www.e-kitabi.com

© 2009 by R.C. Hibbeler. Published by Pearson Prentice Hall, Pearson Education, Inc., Upper Saddle River, NJ. All rights reserved. This material is protected under all copyright laws as they currently exist. No portion of this material may be reproduced, in any form or by any means, without permission in writing from the publisher.

8–25. Use the moment-area theorems and determine the slope at B and the displacement at C. The member is an A-36 steel structural tee for which $I = 76.8\ \text{in}^4$.

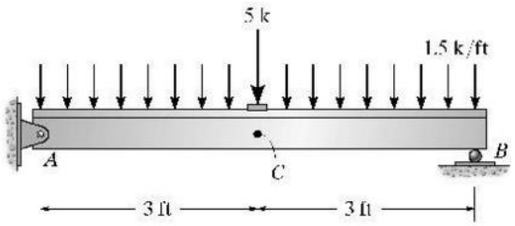

Support Reactions and Elastic Curve : As shown.

M/EI Diagrams : The *M/EI* diagrams for the uniform distributed load and concentrated load are drawn separately as shown.

Moment-Area Theorems : Due to symmetry, the slope at midspan C is zero. Hence the slope at B is

$$\theta_B = |\theta_{B/C}| = \frac{1}{2}\left(\frac{7.50}{EI}\right)(3) + \frac{2}{3}\left(\frac{6.75}{EI}\right)(3)$$
$$= \frac{24.75\ \text{kip}\cdot\text{ft}^2}{EI}$$
$$= \frac{24.75(144)}{29.0(10^3)(76.8)}$$
$$= 0.00160\ \text{rad} \qquad \textbf{Ans}$$

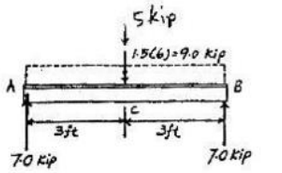

The displacement at C is

$$\Delta_C = |t_{A/C}| = \frac{1}{2}\left(\frac{7.50}{EI}\right)(3)\left(\frac{2}{3}\right)(3) + \frac{2}{3}\left(\frac{6.75}{EI}\right)(3)\left(\frac{5}{8}\right)(3)$$
$$= \frac{47.8125\ \text{kip}\cdot\text{ft}^3}{EI}$$
$$= \frac{47.8125(1728)}{29.0(10^3)(76.8)}$$
$$= 0.0371\ \text{in.} \downarrow \qquad \textbf{Ans}$$

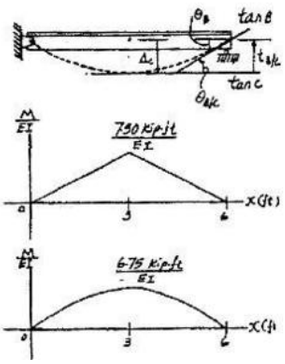

8–26. Use the moment-area theorems and determine the displacement at B and the slope at A. EI is constant.

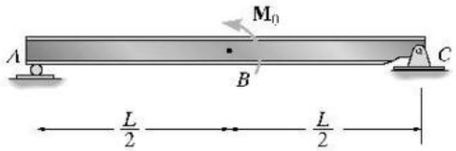

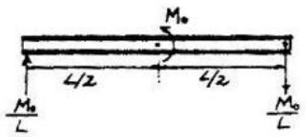

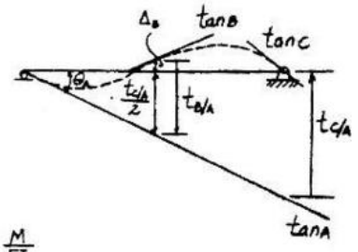

$$\Delta_C + \frac{t_{C/A}}{2} = t_{B/A}$$

$$\Delta_B = t_{B/A} - \frac{t_{C/A}}{2}$$

$$\Delta_B = \frac{1}{2}\left(\frac{M_0}{2EI}\right)\left(\frac{L}{2}\right)\left(\frac{L}{6}\right) - \frac{1}{2}\left[\frac{1}{2}\left(\frac{M_0}{2EI}\right)\left(\frac{L}{2}\right)\left(\frac{1}{2}+\frac{L}{6}\right)\right] - \frac{1}{2}\left(-\frac{M_0}{2EI}\right)\left(\frac{L}{2}\right)\left(\frac{L}{3}\right) = 0 \qquad \textbf{Ans}$$

$$\theta_A = \frac{t_{C/A}}{L}$$

$$\theta_A = \frac{\frac{1}{2}\left(\frac{L}{2}\right)\left(\frac{M}{2EI}\right)\left(\frac{L}{2}+\frac{L}{6}\right) + \frac{1}{2}\left(\frac{L}{2}\right)\left(-\frac{M_0}{2EI}\right)\left(\frac{L}{3}\right)}{L}$$

$$= \frac{M_0 L}{24EI} \qquad \textbf{Ans}$$

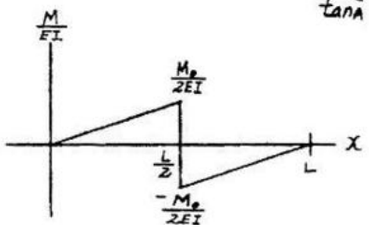

www.e-kitabi.com

© 2009 by R.C. Hibbeler. Published by Pearson Prentice Hall, Pearson Education, Inc., Upper Saddle River, NJ. All rights reserved. This material is protected under all copyright laws as they currently exist. No portion of this material may be reproduced, in any form or by any means, without permission in writing from the publisher.

8–27. Use the moment-area theorems and determine the displacement at C. Take $E = 29(10^3)$ ksi, $I = 1200\ \text{in}^4$.

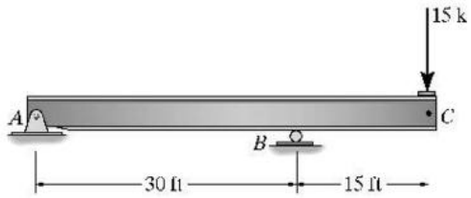

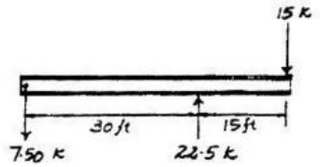

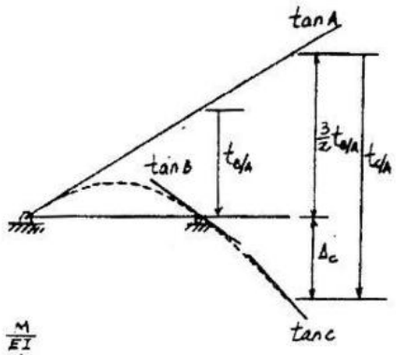

$$t_{B/A} = \frac{-1}{2}\left(\frac{225}{EI}\right)(30)\left[\frac{1}{3}(30)\right] = \frac{-33\,750}{EI}$$

$$t_{C/A} = \frac{1}{2}\left(\frac{-225}{EI}\right)(30)\left[\frac{1}{3}(30) + 15\right] + \frac{1}{2}\left(\frac{-225}{EI}\right)(15)\left(\frac{2}{3}\right)(15) = \frac{-101\,250}{EI}$$

$$\Delta_C = t_{C/A} - \frac{3}{2}(t_{B/A}) = \frac{101\,250}{EI} + \frac{3}{2}\left(\frac{33\,750}{EI}\right) - \frac{50\,625}{EI}$$

$$= \frac{50\,625(1\,728)}{29(10^3)(1200)} = 2.51\ \text{in.} \qquad \textbf{Ans}$$

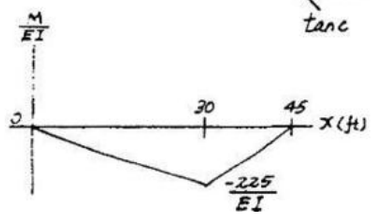

***8–28.** Use the conjugate-beam method and determine the slope and displacement at A. EI is constant.

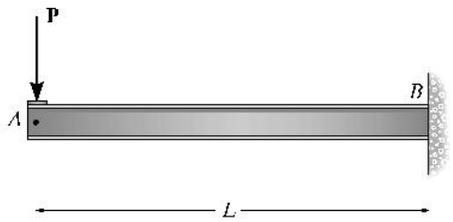

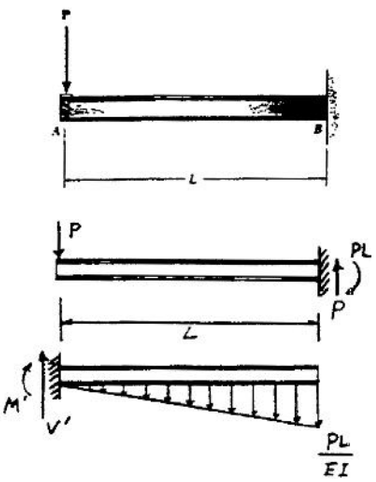

$$+\uparrow \Sigma F_y = 0;\ V' - \left(\frac{1}{2}\right)\frac{PL}{EI}(L) = 0$$

$$\theta_A = V' = \frac{PL^2}{2EI} \qquad \textbf{Ans}$$

$$\zeta + \Sigma M_A' = 0;\ M' + \frac{PL^2}{2EI}\left(\frac{2L}{3}\right) = 0$$

$$\Delta_A = M' = -\frac{PL^3}{3EI} \qquad \textbf{Ans}$$

www.e-kitabi.com

© 2009 by R.C. Hibbeler. Published by Pearson Prentice Hall, Pearson Education, Inc., Upper Saddle River, NJ. All rights reserved. This material is protected under all copyright laws as they currently exist. No portion of this material may be reproduced, in any form or by any means, without permission in writing from the publisher.

8–29. Use the conjugate-beam method and determine the displacement at C and the slope at A, B, and C. EI is constant.

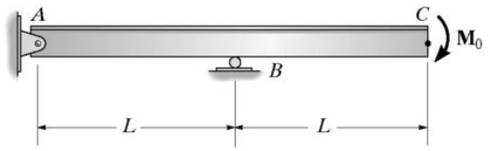

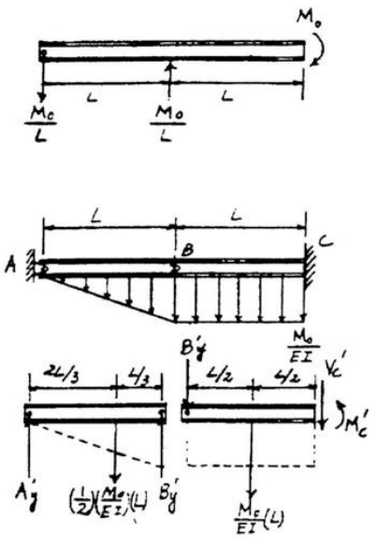

Segment AB

$$+\Sigma M_A = 0; \quad B'_y = (L) - \frac{1}{2}\left(\frac{M_0}{EI}\right)L\left(\frac{2}{3}L\right) = 0$$

$$B'_y = \frac{M_0 L}{3EI}$$

Segment BC

$$+\uparrow \Sigma F_y = 0; \quad C_y - \frac{M_0 L}{EI} - \frac{M_0 L}{3EI} = 0$$

$$\theta_C = C_y = -\frac{4M_0 L}{3EI} \qquad \textbf{Ans}$$

$$\left(+\Sigma M_{C'} = 0; \quad \frac{M_0 L}{EI}\left(\frac{L}{2}\right) + \frac{M_0 L}{3EI}(L) + M_C' = 0\right.$$

$$\Delta_C = M_C' = -\frac{5M_0 L^2}{6EI} \qquad \textbf{Ans}$$

8–30. Use the conjugate-beam method and determine the slope at B and displacement at C. EI is constant.

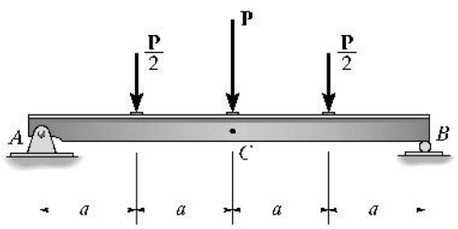

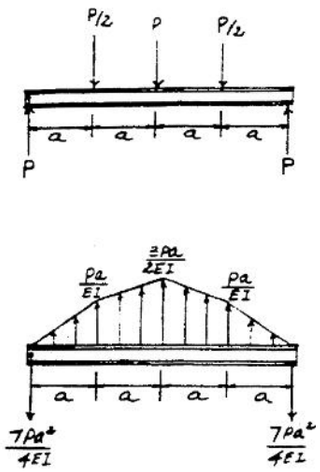

Reaction at B' is the same as the slope at B

$$\theta_B = V_B' = \frac{7Pa^2}{4EI} \qquad \textbf{Ans}$$

$$\left(+\Sigma M_{C'} = 0; \quad -\frac{Pa^2}{4EI}\left(\frac{a}{3}\right) - \frac{Pa^2}{EI}\left(\frac{a}{2}\right) - \frac{Pa^2}{2EI}\left(\frac{4a}{3}\right) + \frac{7Pa^2}{4EI}\left(2a\right) + M_{C'} = 0\right.$$

$$\Delta_C = M_{C'} = -\frac{9Pa^3}{4EI} \qquad \textbf{Ans}$$

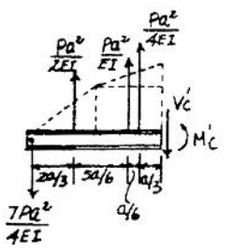

www.e-kitabi.com

c08.qxd 6/24/08 4:04 PM Page 224

© 2009 by R.C. Hibbeler. Published by Pearson Prentice Hall, Pearson Education, Inc., Upper Saddle River, NJ. All rights reserved. This material is protected under all copyright laws as they currently exist. No portion of this material may be reproduced, in any form or by any means, without permission in writing from the publisher.

8–31. Use the conjugate-beam method and determine the slope and the displacement at the end C of the beam. $E = 200$ GPa, $I = 70(10^6)$ mm^4.

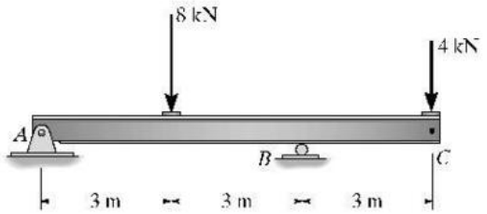

$$\zeta + \Sigma M_A' = 0;\ \frac{36.0}{EI}(1) - B_y'(6) = 0$$

$$B_y' = \frac{6.0}{EI}$$

$$+\uparrow \Sigma F_y = 0;\ -\frac{6.0}{EI} + \frac{18.0}{EI} - V_C' = 0$$

$$V_C' = -\frac{24.0}{EI}$$

$$\theta_C = V_C' = \frac{24.0(10^3)}{200(10^9)(70)(10^{-6})} = -0.00171 \text{ rad}$$ **Ans**

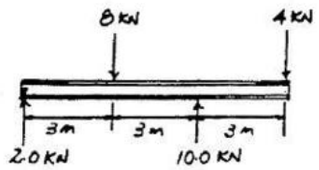

$$\zeta + \Sigma M_C' = 0;\ M_C' + \frac{18.0(2)}{EI} + \frac{6.0}{EI}(3) = 0$$

$$M_C' = -\frac{54.0}{EI}$$

$$\Delta_C = M_C' = \frac{54.0(10^3)}{200(10^9)(70)(10^{-6})} = -0.003857 \text{ m} = -3.86 \text{ mm}$$ **Ans**

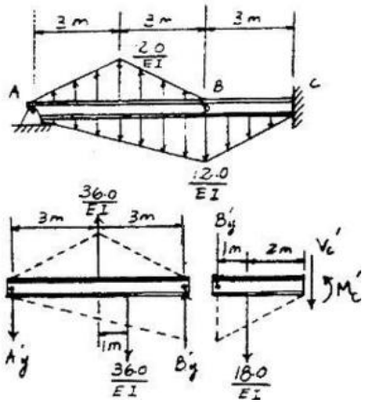

***8–32.** Use the conjugate-beam method and determine the slope and deflection at C. Assume A is a pin and B is a roller. EI is constant.

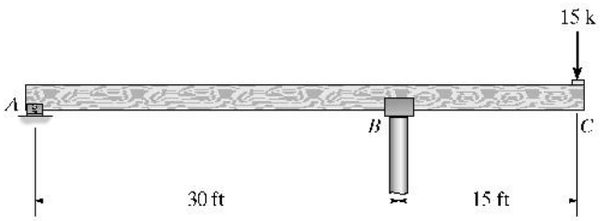

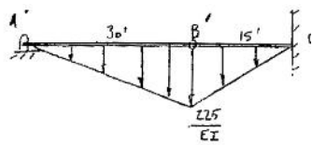

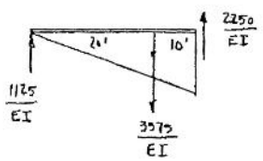

$$+\uparrow \Sigma F_y = 0;\quad -\frac{2250}{EI} - \frac{1687.5}{EI} - V_C' = 0$$

$$\theta_C = V_C' = \frac{-3938 \text{ k}\cdot\text{ft}^2}{EI} = \frac{3938 \text{ k}\cdot\text{ft}^2}{EI}$$ **Ans**

$$\zeta + \Sigma M_C' = 0;\quad \frac{2250}{EI}(15) + \frac{1687.5}{EI}(10) + M_C' = 0$$

$$\Delta_C = M_C' = \frac{-50{,}625 \text{ k}\cdot\text{ft}^3}{EI} = \frac{50{,}625 \text{ k}\cdot\text{ft}^3}{EI} \downarrow$$ **Ans**

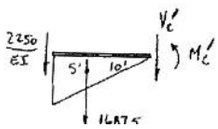

www.e-kitabi.com

© 2009 by R.C. Hibbeler. Published by Pearson Prentice Hall, Pearson Education, Inc., Upper Saddle River, NJ. All rights reserved. This material is protected under all copyright laws as they currently exist. No portion of this material may be reproduced, in any form or by any means, without permission in writing from the publisher.

8–33. Use the conjugate-beam method and determine the slope and deflection at C. $E = 29(10^3)$ ksi, $I = 800\ \text{in}^4$.

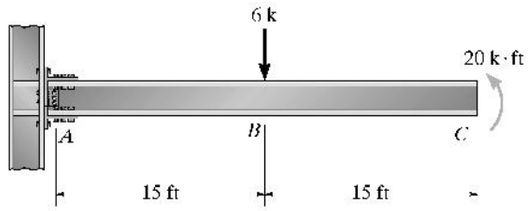

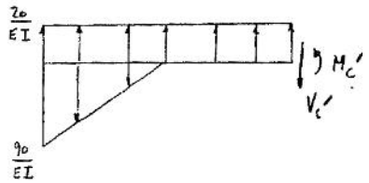

$$\theta_C = V_{C'} = \left(\frac{20}{EI}\right)(30) + \frac{1}{2}\left(\frac{-90}{EI}\right)(15) = \frac{-75}{EI} = \frac{-75(144)}{29(10^3)(800)}$$

$$= -0.000466\ \text{rad} = -0.466(10^{-3})\ \text{rad} \qquad \textbf{Ans}$$

$$\Delta_C = M_{C'} = \left(\frac{20}{EI}\right)(30)\,(15) + \frac{1}{2}\left(\frac{-90}{EI}\right)(15)\,(25)$$

$$= \frac{-7875}{EI} = \frac{-7875(12^3)}{29(10^3)(800)} = -0.587\ \text{in.} = 0.587\ \text{in.}\downarrow \qquad \textbf{Ans}$$

8–34. Use the conjugate-beam method and determine the displacement at A. Assume B is a roller. $E = 200\ \text{GPa}$, $I = 80(10^6)\ \text{mm}^4$.

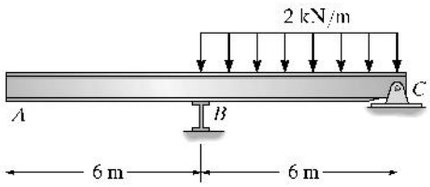

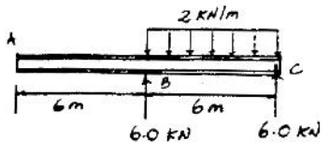

$$\zeta + \Sigma M_{A'} = 0;\quad -M_{A'} + \frac{18}{EI}(6) = 0$$

$$\Delta_A = M_{A'} = \frac{108}{EI}$$

$$\Delta_A = \frac{108(10^3)}{200(10^9)(80)(10^{-6})} = 0.00675\ \text{m} = 6.75\ \text{mm} \qquad \textbf{Ans}$$

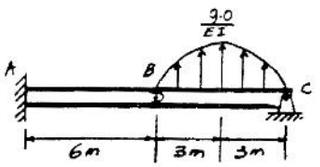

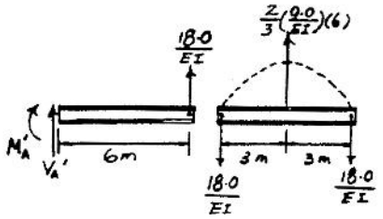

www.e-kitabi.com

© 2009 by R.C. Hibbeler. Published by Pearson Prentice Hall, Pearson Education, Inc., Upper Saddle River, NJ. All rights reserved. This material is protected under all copyright laws as they currently exist. No portion of this material may be reproduced, in any form or by any means, without permission in writing from the publisher.

8–35. Use the conjugate-beam method and determine the slope at C and the displacement at B. EI is constant.

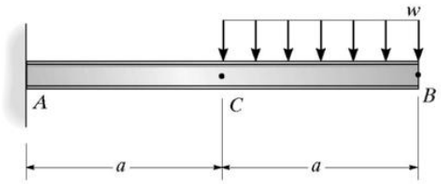

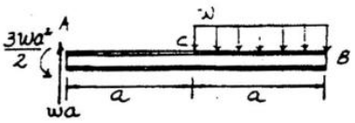

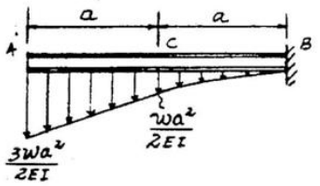

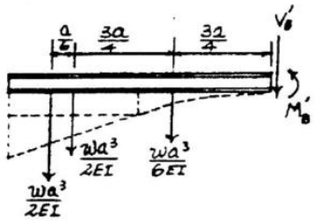

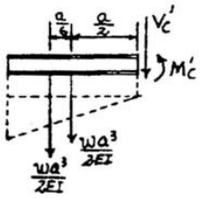

$$+\uparrow \Sigma F_y = 0;\quad -V_C' - \frac{1}{2}\frac{wa^3}{EI} - \frac{wa^3}{2EI} = 0$$

$$V_C' = -\frac{wa^3}{EI}$$

$$\zeta + \Sigma M_B = 0;\quad M_B' + \frac{wa^3}{6EI}\left(\frac{3}{4}a\right) + \frac{wa^3}{2EI}\left(\frac{3}{2}a\right) + \left(\frac{wa^3}{2EI}\right)\left(\frac{5}{3}a\right) = 0$$

$$M_B' = \frac{-41wa^4}{24EI}$$

Thus,

$$\theta_C = V_C' = -\frac{wa^3}{EI} \qquad \textbf{Ans}$$

$$\Delta_B = M_B' = -\frac{41\,a^4}{24EI} \qquad \textbf{Ans}$$

***8–36.** Use the conjugate-beam method and determine the displacement at B and the slope at A. Assume the support at A is a pin and C is a roller. EI is constant.

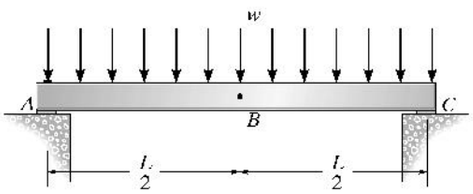

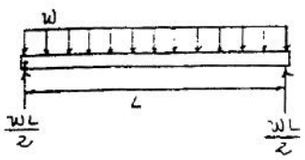

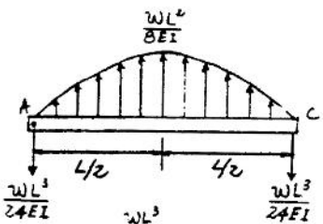

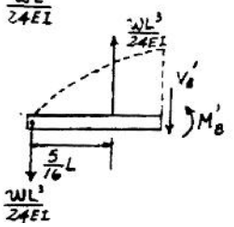

$$\theta_A = V_A' = -\frac{wL^3}{24EI} \qquad \textbf{Ans}$$

$$\zeta + \Sigma M_B' = 0;\quad M_B' - \left(\frac{wL^3}{24EI}\right)\frac{5L}{16} = 0$$

$$\Delta_B = M_B' = -\frac{5wL^4}{384EI} \qquad \textbf{Ans}$$

www.e-kitabi.com

c08.qxd 6/24/08 4:04 PM Page 227

© 2009 by R.C. Hibbeler. Published by Pearson Prentice Hall, Pearson Education, Inc., Upper Saddle River, NJ. All rights reserved. This material is protected under all copyright laws as they currently exist. No portion of this material may be reproduced, in any form or by any means, without permission in writing from the publisher.

8–37. Use the conjugate-beam method and determine the displacement at D and the slope at C. Assume A is a fixed support and C is a roller. EI is constant.

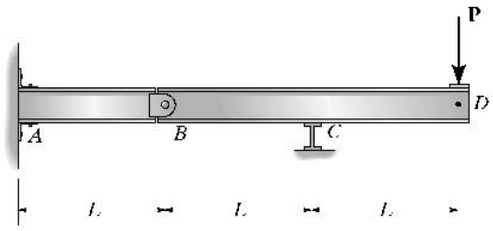

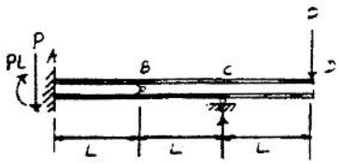

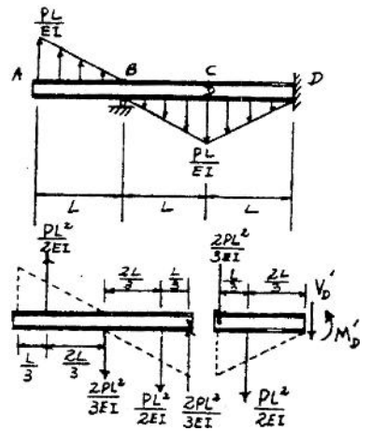

$$\theta_C = V_C' = -\frac{2PL^2}{3EI} \quad \textbf{Ans}$$

$$\zeta + \Sigma M_D' = 0; \quad M_D' + \frac{2PL^2}{3EI}(L) + \frac{PL^2}{2EI}\left(\frac{2L}{3}\right) = 0$$

$$\Delta_D = M_D' = -\frac{PL^3}{EI} \quad \textbf{Ans}$$

8–38. Use the conjugate-beam method and determine the slope just to the left and just to the right of the pin at B. Also, determine the deflection at D. Assume the beam is fixed supported at A, and that C is a roller. EI is constant.

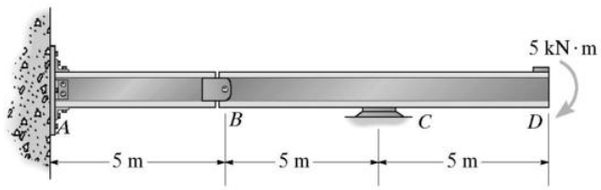

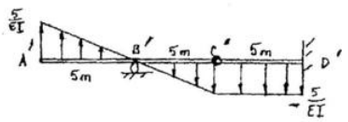

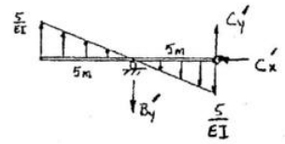

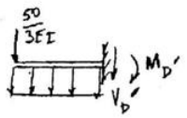

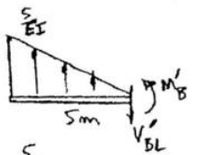

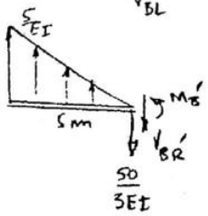

$$\zeta + \Sigma M_C = 0; \quad \frac{12.5}{EI}\left(5 + \frac{10}{3}\right) - \frac{12.5}{EI}\left(\frac{5}{3}\right) - 5B_y' = 0$$

$$B_y' = \frac{50}{3EI}$$

$$+\uparrow \Sigma F_y = 0; \quad \frac{12.5}{EI} - \frac{50}{3EI} - \frac{12.5}{EI} + C_y' = 0$$

$$C_y' = \frac{50}{3EI}$$

$$\zeta + \Sigma M_{D'} = 0; \quad M_{D'} - \frac{25}{EI}(2.5) - \frac{50}{3EI}(5) = 0$$

$$\Delta_D = M_{D'} = \frac{437.5}{3EI} = \frac{146\ \text{kN}\cdot\text{m}^3}{EI} \downarrow \quad \textbf{Ans}$$

$$+\uparrow \Sigma F_y = 0; \quad \frac{12.5}{EI} - V_{B_L} = 0$$

$$\theta_{B_L} = V_{B_L} = \frac{12.5\ \text{kN}\cdot\text{m}^2}{EI} \quad \textbf{Ans}$$

$$+\uparrow \Sigma F_y = 0; \quad \frac{12.5}{EI} - \frac{50}{3EI} - V_{B_R} = 0$$

$$\theta_{B_R} = V_{B_R} = \frac{4.17\ \text{kN}\cdot\text{m}^2}{EI} \quad \textbf{Ans}$$

www.e-kitabi.com

c09.qxd 6/25/08 11:02 AM Page 229

© 2009 by R.C. Hibbeler. Published by Pearson Prentice Hall, Pearson Education, Inc., Upper Saddle River, NJ. All rights reserved. This material is protected under all copyright laws as they currently exist. No portion of this material may be reproduced, in any form or by any means, without permission in writing from the publisher.

9–1. Use the method of virtual work and determine the vertical displacement of joint B of the truss. Each steel member has a cross-sectional area of 300 mm^2. $E = 200$ GPa.

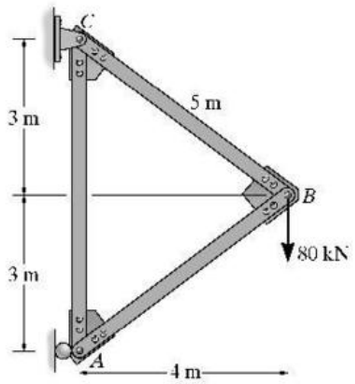

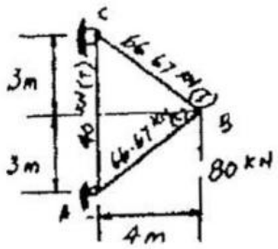

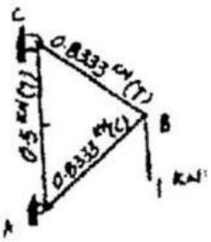

Member	n	N	L	nNL
AB	−0.8333	−66.67	5	277.78
BC	0.8333	66.67	5	277.78
AC	0.5	40	6	120.00
			Σ =	675.56

$$1 \cdot \Delta_{B_v} = \Sigma \frac{nNL}{AE}$$

$$\Delta_{B_v} = \frac{675.56(10^3)}{300(10^{-6})(200)(10^9)} = 0.01126 \text{ m} = 11.3 \text{ mm} \quad \text{Ans}$$

9–2. Solve Prob. 9–1 using Castigliano's theorem.

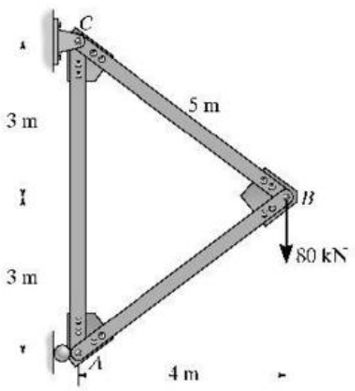

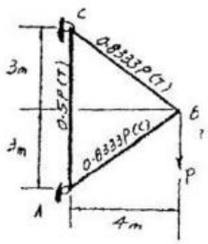

Member	N	$\partial N/\partial P$	$N(P = 80\text{ KN})$	L	$N(\partial N/\partial P)L$
AB	$-0.8333P$	−0.8333	−66.67	5	277.78
AC	$0.5P$	0.5	40	6	120.00
BC	$0.8333P$	0.8333	66.67	5	277.78
					$\Sigma = 675.56$

$$\Delta_{B_v} = \Sigma N\left(\frac{\partial N}{\partial P}\right)\frac{L}{AE} = \frac{675.56}{AE} = \frac{675.56(10^3)}{300(10^{-6})(200)(10^9)} = 0.0113 \text{ m} = 11.3 \text{ mm} \quad \text{Ans}$$

www.e-kitabi.com

c09.qxd 6/25/08 11:02 AM Page 230

© 2009 by R.C. Hibbeler. Published by Pearson Prentice Hall, Pearson Education, Inc., Upper Saddle River, NJ. All rights reserved. This material is protected under all copyright laws as they currently exist. No portion of this material may be reproduced, in any form or by any means, without permission in writing from the publisher.

9–3. Use the method of virtual work and determine the horizontal displacement of joint B of the truss. Each steel member has a cross-sectional area of 300 mm^2. $E = 200$ GPa.

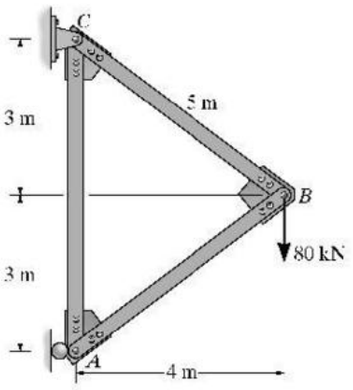

Member	n	N	L	nNL
AB	0.625	−66.67	5	−208.33
BC	0.625	66.67	5	208.33
AC	−0.375	40	6	−90.00
				$\Sigma = -90.00$

$$1 \cdot \Delta_{B_h} = \Sigma \frac{nNL}{AE}$$

$$\Delta_{B_h} = \frac{-90(10^3)}{300(10^{-6})(200)(10^9)} = -1.50(10^{-3})\ \text{m} = -1.50\ \text{mm} = 1.50\ \text{mm} \leftarrow \quad \textbf{Ans}$$

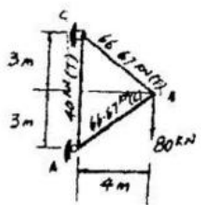

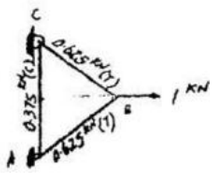

***9–4.** Solve Prob. 9–3 using Castigliano's theorem.

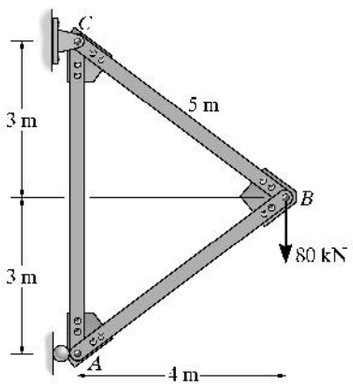

Member	N	$\partial N/\partial P$	$N(P=0)$	L	$N(\partial N/\partial P)L$
AB	$-(66.67 - 0.625P)$	0.625	−66.67	5	−208.33
AC	$40 - 0.375P$	−0.375	40	6	−90.00
BC	$66.67 + 0.625P$	0.625	66.67	5	208.33
					$\Sigma = -90.00$

$$\Delta_{B_h} = \Sigma N\left(\frac{\partial N}{\partial P}\right)\frac{L}{AE} = \frac{-90}{AE} = \frac{-90(10^3)}{300(10^{-6})(200)(10^9)} = -1.50(10^{-3})\ \text{m}$$

$$= -1.50\ \text{mm} = 1.50\ \text{mm} \leftarrow \quad \textbf{Ans}$$

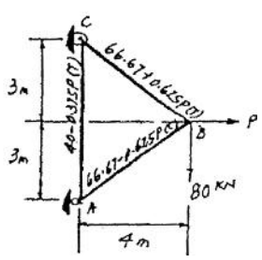

www.e-kitabi.com

© 2009 by R.C. Hibbeler. Published by Pearson Prentice Hall, Pearson Education, Inc., Upper Saddle River, NJ. All rights reserved. This material is protected under all copyright laws as they currently exist. No portion of this material may be reproduced, in any form or by any means, without permission in writing from the publisher.

9–5. Determine the horizontal displacement of joint B of the truss. Each member has a cross-sectional area of 400 mm^2. $E = 200$ GPa. Use the method of virtual work.

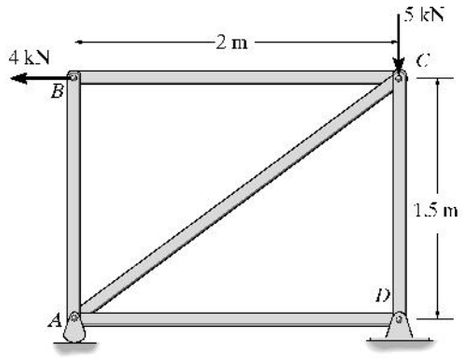

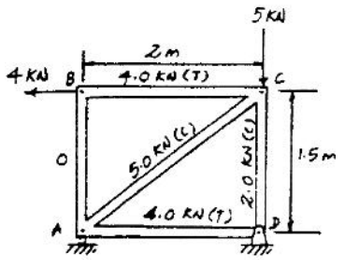

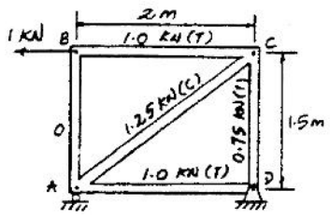

MEMBER	n	N	L	nNL
AB	0	0	1.5	0
AC	−1.25	−5.00	2.5	15.625
AD	1.00	4.00	2.0	8.000
BC	1.00	4.00	2.0	8.000
CD	0.75	−2.00	1.5	−2.25
				$\Sigma = 29.375$

$$1 \cdot \Delta_{B_h} = \Sigma \frac{nNL}{AE}$$

$$\Delta_{B_h} = \frac{29.375(10^3)}{400(10^{-6})(200)(10^9)} = 0.3672(10^{-3})\ \text{m} = 0.367\ \text{mm} \quad \textbf{Ans}$$

9–6. Solve Prob. 9–5 using Castigliano's theorem.

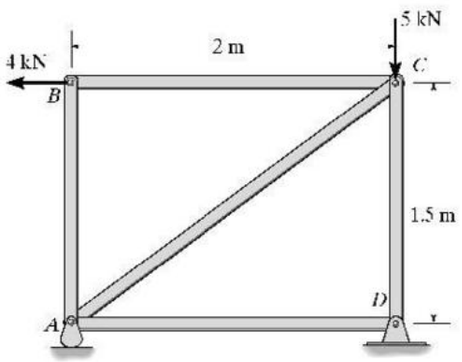

MEMBER	N	$\partial N/\partial P$	$N(P=4)$	L	$N(\partial N/\partial P)L$
AB	0	0	0	1.5	0
AC	$-1.25P$	−1.25	−5	2.5	15.625
AD	P	1	4	2.0	8.00
BC	P	1	4	2.0	8.00
CD	$-(5-0.75P)$	0.75	−2	1.5	−2.25
					$\Sigma = 29.375$

$$\Delta_{B_h} = \Sigma N\left(\frac{\partial N}{\partial P}\right)\left(\frac{L}{AE}\right) = \frac{29.375(10^3)}{400(10^{-6})(200)(10^9)} = 0.367(10^{-3})\ \text{m}$$
$$= 0.367\ \text{mm} \quad \textbf{Ans}$$

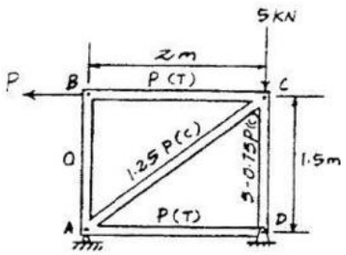

www.e-kitabi.com

c09.qxd 6/25/08 11:02 AM Page 232

© 2009 by R.C. Hibbeler. Published by Pearson Prentice Hall, Pearson Education, Inc., Upper Saddle River, NJ. All rights reserved. This material is protected under all copyright laws as they currently exist. No portion of this material may be reproduced, in any form or by any means, without permission in writing from the publisher.

9–7. Determine the vertical displacement of joint C of the truss. Each member has a cross-sectional area of $400\,\text{mm}^2$. $E = 200\,\text{GPa}$. Use the method of virtual work.

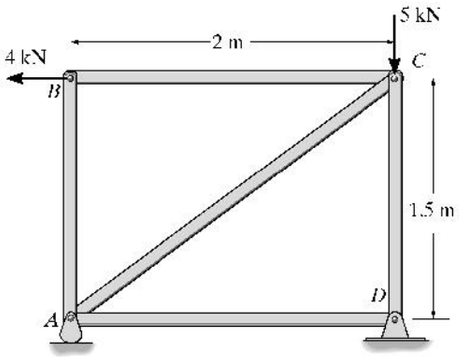

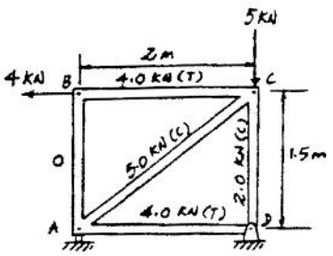

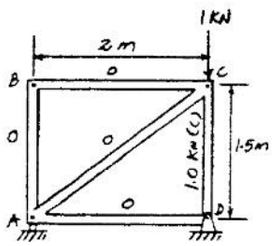

MEMBER	n	N	L	nNL
AB	0	0	1.5	0
AC	0	−5.00	2.5	0
AD	0	4.00	2.0	0
BC	0	4.00	2.0	0
CD	−1.00	−2.00	1.5	3.00
				$\Sigma = 3.00$

$$1 \cdot \Delta_{C_v} = \Sigma \frac{nNL}{AE}$$

$$\Delta_{C_v} = \frac{3.00\,(10^3)}{400(10^{-6})(200)(10^9)} = 37.5(10^{-6})\,\text{m} = 0.0375\,\text{mm} \quad \textbf{Ans}$$

***9–8.** Solve Prob. 9–7 using Castigliano's theorem.

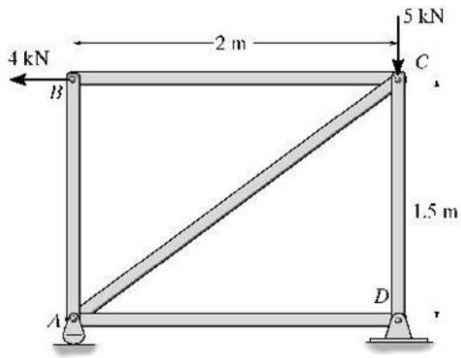

MEMBER	N	$\partial N/\partial P$	$N(P=5)$	L	$N(\partial N/\partial P)L$
AB	0	0	0	1.5	0
AC	−5	0	−5	2.5	0
AD	4	0	4	2.0	0
BC	4	0	4	2.0	0
CD	$-(P-3)$	−1	−2	1.5	3
					$\Sigma = 3$

$$\Delta_{C_v} = \Sigma N \left(\frac{\partial N}{\partial P}\right) \frac{L}{AE}$$

$$= \frac{3}{AE} = \frac{3(10^3)}{400(10^{-6})(200)(10^9)} = 37.5(10^{-6})\,\text{m} = 0.0375\,\text{mm} \quad \textbf{Ans}$$

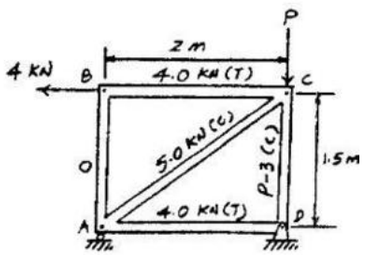

www.e-kitabi.com

c09.qxd 6/25/08 11:02 AM Page 233

© 2009 by R.C. Hibbeler. Published by Pearson Prentice Hall, Pearson Education, Inc., Upper Saddle River, NJ. All rights reserved. This material is protected under all copyright laws as they currently exist. No portion of this material may be reproduced, in any form or by any means, without permission in writing from the publisher.

9–9. Determine the vertical displacement of the truss at joint F. Assume all members are pin connected at their end points. Take $A = 0.5\ \text{in}^2$ and $E = 29(10^3)$ ksi for each member. Use the method of virtual work.

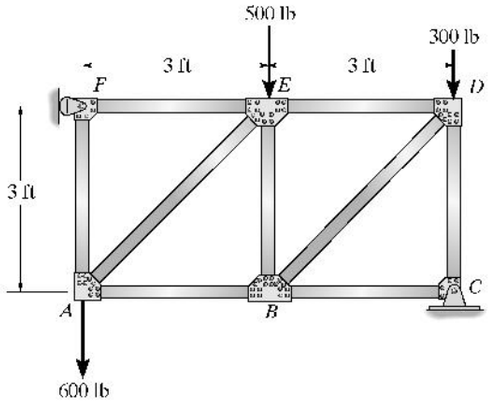

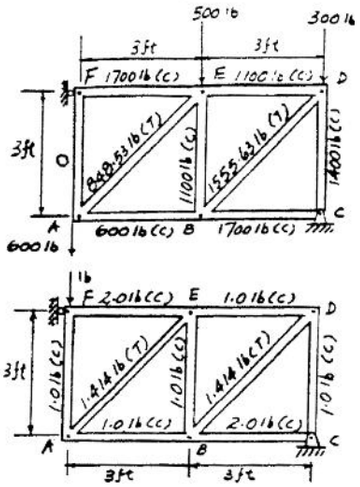

$$\Delta_{F_v} = \Sigma\frac{nNL}{AE} = \frac{1}{AE}[(-1.00)(-600)(3) + (1.414)(848.5)(4.243) + (-1.00)(0)(3)$$
$$+(-1.00)(-1100)(3) + (1.414)(1555.6)(4.243) + (-2.00)(-1700)(3)$$
$$+ (-1.00)(-1400)(3) + (-1.00)(-1100)(3) + (-2.00)(-1700)(3)](12)$$
$$= \frac{47\,425.0(12)}{0.5(29)(10^6)} = 0.0392\ \text{in.} \qquad \textbf{Ans}$$

9–10. Solve Prob. 9–9 using Castigliano's theorem.

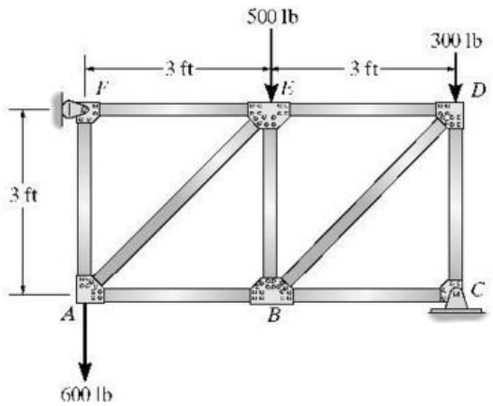

$$\Delta_{F_v} = \Sigma N\left(\frac{\partial N}{\partial P}\right)\frac{L}{AE} = \frac{1}{AE}[[-(P + 600](-1)(3) + (1.414P + 848.5)(1.414)(4.243)$$
$$+ (-P)(-1)(3) + (-(P + 1100))(-1)(3)$$
$$+ (1.414P + 1555.6)(1.414)(4.243) + (-(2P + 1700))(-2)(3)$$
$$+ (-(P + 1400)(-1)(3) + (-(P + 1100))(-1)(3)$$
$$+ (-(2P + 1700))(-2)(3)](12) = \frac{(55.97P + 47.425.0)(12)}{(0.5(29(10)^6)}$$

Set $P = 0$ and evaluate

$$\Delta_{F_v} = 0.0392\ \text{in.} \qquad \textbf{Ans}$$

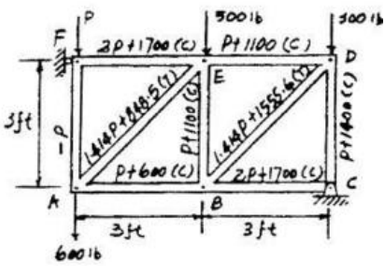

www.e-kitabi.com

© 2009 by R.C. Hibbeler. Published by Pearson Prentice Hall, Pearson Education, Inc., Upper Saddle River, NJ. All rights reserved. This material is protected under all copyright laws as they currently exist. No portion of this material may be reproduced, in any form or by any means, without permission in writing from the publisher.

9–11. Determine the vertical displacement of the truss at joint B. Assume all members are pin connected at their end points. Take $A = 0.5\ \text{in}^2$ and $E = 29(10^3)\ \text{ksi}$ for each member. Use the method of virtual work.

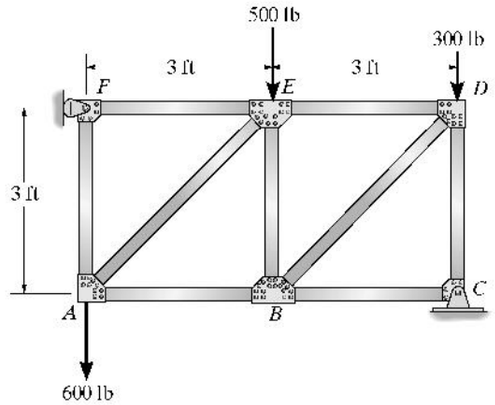

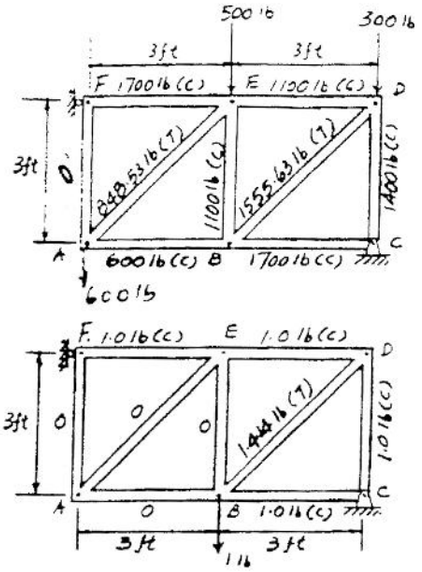

$$\Delta_{B_v} = \Sigma\frac{nNL}{AE} = \frac{1}{AE}[1.414(1555.6)(4.243) + (-1.00)(-1700)(3) + (-1.00)(-1400)(3) + (-1.00)(-1100)(3) + (-1.00)(-1700)(3)](12) = \frac{27\,034(12)}{0.5(29)(10^6)}$$

$$= 0.0224\ \text{in.} \qquad \textbf{Ans}$$

***9–12.** Solve Prob. 9–11 using Castigliano's theorem.

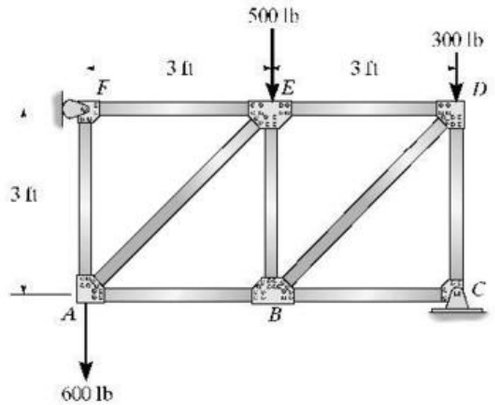

$$\Delta_{B_v} = \Sigma N\left(\frac{\partial N}{\partial P}\right)\frac{L}{AE} = \frac{1}{AE}[(-600)(0)(3) + (848.5)(0)(4.243) + (-1100)(0)(3) + (1.414P + 1555.6)(1.414)(4.243) + (-(P + 1700))(-1)(3) + (-(P + 1400))(-1)(3) + (-(P + 1100))(-1)(3) + (-(P + 1700))(-1)(3)$$

Set $P = 0$ and evaluate

$$\Delta_{B_v} = \frac{27034(12)}{0.5(29)(10^6)} = 0.0224\ \text{in.} \quad \textbf{Ans}$$

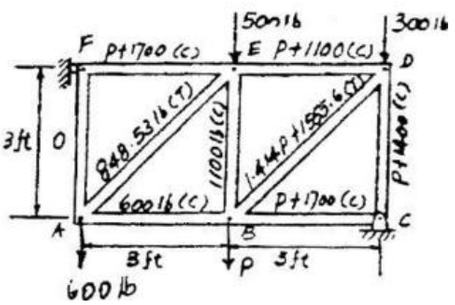

www.e-kitabi.com

c09.qxd 6/25/08 11:02 AM Page 235

© 2009 by R.C. Hibbeler. Published by Pearson Prentice Hall, Pearson Education, Inc., Upper Saddle River, NJ. All rights reserved. This material is protected under all copyright laws as they currently exist. No portion of this material may be reproduced, in any form or by any means, without permission in writing from the publisher.

9–13. Determine the vertical displacement of point A. Assume the members are pin connected at their ends. Take $A = 100\ \text{mm}^2$ and $E = 200\ \text{GPa}$ for each member. Use the method of virtual work.

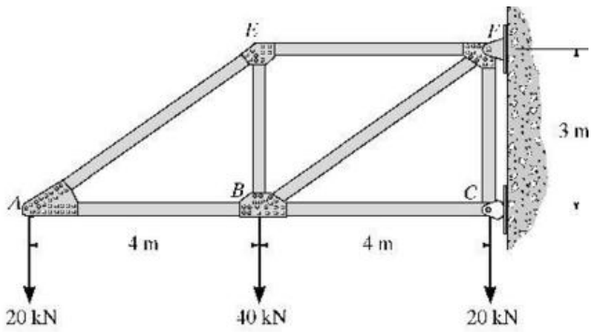

$$(\Delta_A)_v = \frac{\Sigma N n L}{AE} = \frac{(33.33)(1.667)(5)}{AE} + \frac{(26.67)(1.333)(4)}{AE} + \frac{(-20)(-1)(3)}{AE}$$

$$+ \frac{(100)(1.667)(5)}{AE} + \frac{(-26.67)(-1.333)(4)}{AE} + \frac{(-2.667)(-106.67)(4)}{AE} + \frac{(20)(0)(3)}{AE}$$

$$= \frac{2593.33}{AE} = \frac{2593.33(10^3)\text{N}\cdot\text{m}}{100(10^{-6})\text{m}^2(200(10^6)\text{N/m}^2} = 0.130\ \text{m} = 130\ \text{mm} \quad \textbf{Ans.}$$

REAL FORCES

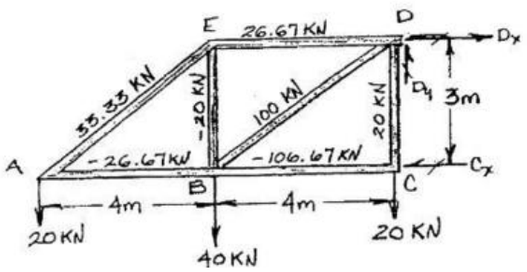

VIRTUAL FORCES

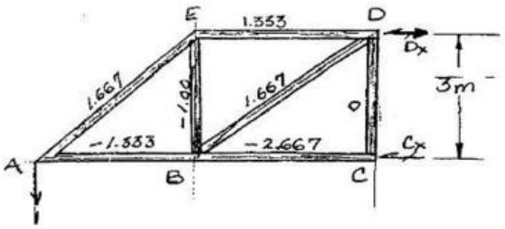

9–14. Solve Prob. 9–13 using Castigliano's theorem.

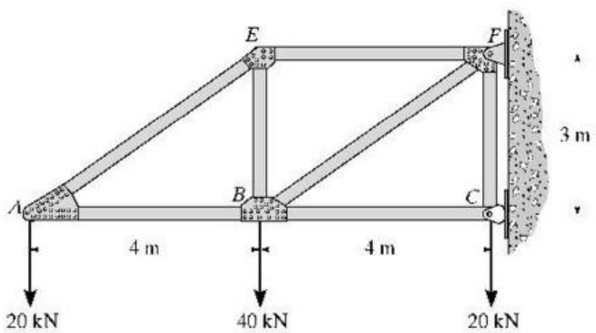

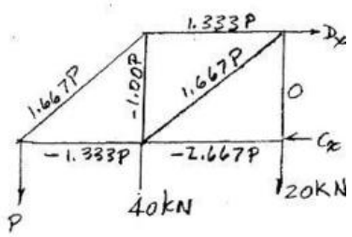

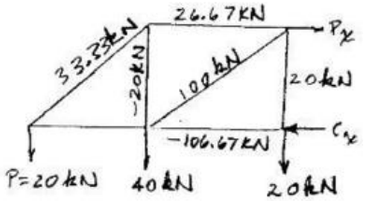

$$(\Delta_A)_v = \frac{\Sigma N(\partial N/\partial P)L}{AE} = \frac{(33.33)(1.667)(5)}{AE} + \frac{(26.67)(1.333)(4)}{AE} + \frac{(-20)(-1)(3)}{AE}$$

$$+ \frac{(100)(1.667)(5)}{AE} + \frac{(-26.67)(-1.333)(4)}{AE} + \frac{(-2.667)(-106.67)(4)}{AE} + \frac{(20)(0)(3)}{AE}$$

$$= \frac{2593.33}{AE} = \frac{2593.33(10^3)\text{N}\cdot\text{m}}{100(10^{-6})\text{m}^2(200(10^6)\text{N/m}^2} = 0.130\ \text{m} = 130\ \text{mm} \quad \textbf{Ans.}$$

www.e-kitabi.com

c09.qxd 6/25/08 11:02 AM Page 236

© 2009 by R.C. Hibbeler. Published by Pearson Prentice Hall, Pearson Education, Inc., Upper Saddle River, NJ. All rights reserved. This material is protected under all copyright laws as they currently exist. No portion of this material may be reproduced, in any form or by any means, without permission in writing from the publisher.

9–15. Use the method of virtual work and determine the horizontal displacement of point C. Each steel member has a cross-sectional area of 400 mm^2. $E = 200$ GPa.

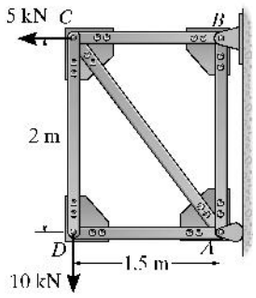

Member Real Forces N : As shown on figure(a).

Member Virtual Forces n : As shown on figure(b).

Virtual-Work Equation : Applying Eq. 9–15, we have

Member	*n*	*N*	*L*	*nNL*
AB	0	$10.0(10^3)$	2	0
BC	1.00	$12.5(10^3)$	1.5	$18.75(10^3)$
CD	0	$10.0(10^3)$	2	0
AD	0	0	1.5	0
AC	0	$-12.5(10^3)$	2.5	0

$$\sum 18.75(10^3)\ \text{N}^2\cdot\text{m}$$

$$1\cdot\Delta = \sum \frac{nNL}{AE}$$

$$1\ \text{N}\cdot(\Delta_C)_h = \frac{18.75(10^3)\ \text{N}^2\cdot\text{m}}{AE}$$

$$(\Delta_C)_h = \frac{18.75(10^3)}{0.400(10^{-3})[200(10^9)]}$$

$$= 0.2344(10^{-3})\ \text{m} = 0.234\ \text{mm} \leftarrow \quad \text{Ans}$$

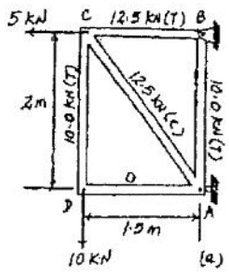

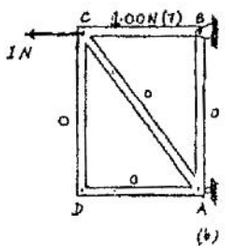

***9–16.** Solve Prob. 9–15 using Castigliano's theorem.

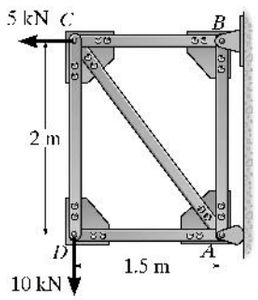

Member Forces N : Member forces due to external force **P** and external applied forces are shown on the figure.

Castigliano's Second Theorem : Applying Eq. 9–27, we have

Member	*N*	$\frac{\partial N}{\partial P}$	$N(P=5\ \text{kN})$	*L*	$N\left(\frac{\partial N}{\partial P}\right)L$
AB	10.0	0	10.0	2	0
BC	$1.00P+7.50$	1.00	12.5	1.5	18.75
CD	10.0	0	10.0	2	0
AD	0	0	0	1.5	0
AC	−12.5	0	−12.5	2.5	0

$$\sum 18.75\ \text{kN}\cdot\text{m}$$

$$\Delta = \sum N\left(\frac{\partial N}{\partial P}\right)\frac{L}{AE}$$

$$(\Delta_C)_h = \frac{18.75\ \text{kN}\cdot\text{m}}{AE}$$

$$= \frac{18.75(10^3)}{0.400(10^{-3})[200(10^9)]}$$

$$= 0.2344(10^{-3})\ \text{m} = 0.234\ \text{mm} \leftarrow \quad \text{Ans}$$

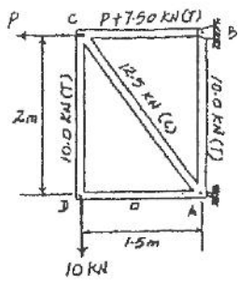

www.e-kitabi.com

c09.qxd 6/25/08 11:02 AM Page 237

© 2009 by R.C. Hibbeler. Published by Pearson Prentice Hall, Pearson Education, Inc., Upper Saddle River, NJ. All rights reserved. This material is protected under all copyright laws as they currently exist. No portion of this material may be reproduced, in any form or by any means, without permission in writing from the publisher.

9–17. Use the method of virtual work and determine the vertical displacement of point D. Each A-36 steel member has a cross-sectional area of 400 mm^2. $E = 200$ GPa.

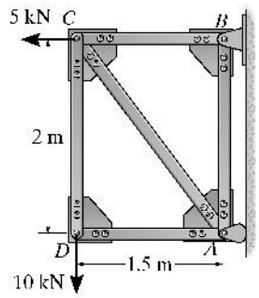

Member Real Forces N : As shown on figure(a).

Member Virtual Forces n : As shown on figure(b).

Virtual-Work Equation : Applying Eq. 9–15, we have

Member	n	N	L	nNL
AB	1.00	$10.0(10^3)$	2	$20.0(10^3)$
BC	0.750	$12.5(10^3)$	1.5	$14.0625(10^3)$
CD	1.00	$10.0(10^3)$	2	$20.0(10^3)$
AD	0	0	1.5	0
AC	−1.25	$-12.5(10^3)$	2.5	$39.0625(10^3)$

$$\sum 93.125(10^3)\ \text{N}^2\cdot\text{m}$$

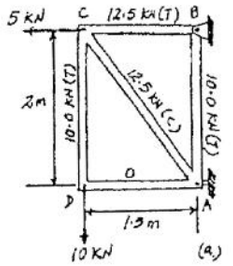

$$1\cdot\Delta = \sum \frac{nNL}{AE}$$

$$1\ \text{N}\cdot(\Delta_D)_v = \frac{93.125(10^3)\ \text{N}^2\cdot\text{m}}{AE}$$

$$(\Delta_D)_v = \frac{93.125(10^3)}{0.400(10^{-3})[200(10^9)]}$$

$$= 1.164(10^{-3})\ \text{m} = 1.16\ \text{mm}\downarrow \quad \textbf{Ans}$$

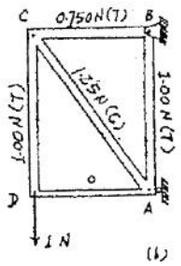

9–18. Determine the vertical displacement of point B. The cross-sectional area of each member is indicated in the figure. Assume the members are pin-connected at their end points. $E = 29(10^3)$ ksi. Use the method of virtual work.

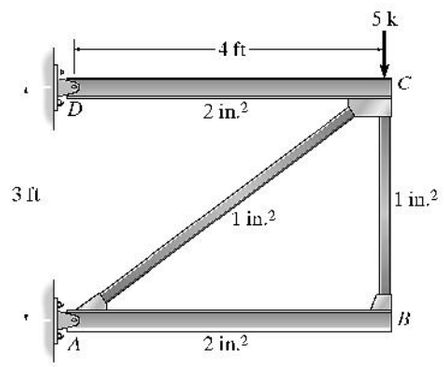

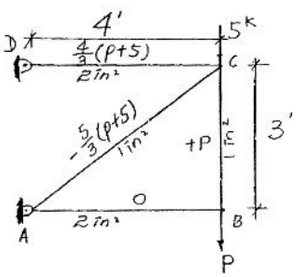

$$\Delta_{Bv} = \Sigma N\frac{\partial N}{\partial P}\frac{L}{AE} = \frac{4}{3}(5)\frac{4}{3}\left(\frac{4(12)}{2(29)(10^3)}\right) + \left(-\frac{5}{3}\right)(5)\left(-\frac{5}{3}\right)\left(\frac{5(12)}{1(29)(10^3)}\right) + 0 + 0 = 0.0361\ \text{in.} \quad \textbf{Ans}$$

www.e-kitabi.com

c09.qxd 6/25/08 11:02 AM Page 238

© 2009 by R.C. Hibbeler. Published by Pearson Prentice Hall, Pearson Education, Inc., Upper Saddle River, NJ. All rights reserved. This material is protected under all copyright laws as they currently exist. No portion of this material may be reproduced, in any form or by any means, without permission in writing from the publisher.

9–19. Solve Prob. 9–18 using Castigliano's theorem.

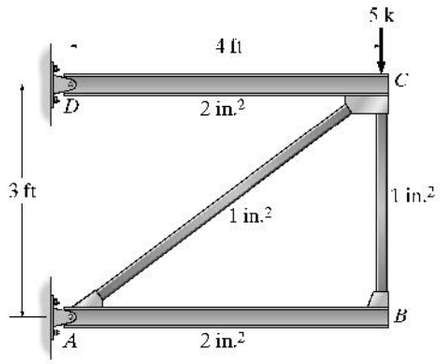

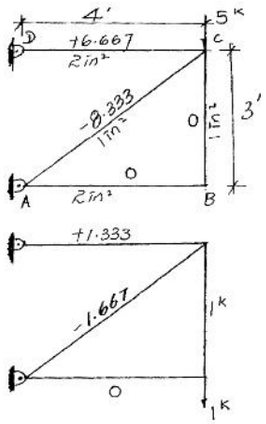

$$1\cdot\Delta_{Bv}=\Sigma\frac{nNL}{AE}=\frac{1.333(6.667)4(12)}{2(29)(10^3)}+\frac{(-1.667)(-8.333)5(12)}{1(29)(10^3)}+0+0=0.0361\text{ in.}\quad\textbf{Ans}$$

9–20. Determine the vertical displacement of point E. Each member has a cross-sectional area of 4.5 in^2. $E = 29(10^3)$ ksi. Use the method of virtual work.

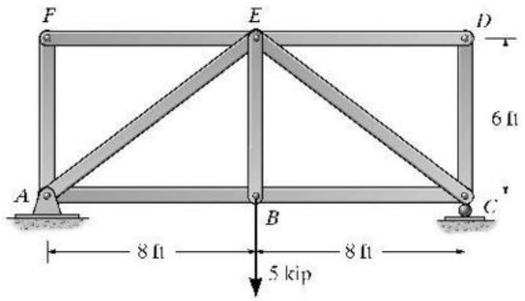

Virtual-Work Equation: Applying Eq. 9-15, we have

Member	*n*	*N*	*L*	*nNL*
AB	0.6667	3.333	96	213.33
BC	0.6667	3.333	96	213.33
CD	0	0	72	0
DE	0	0	96	0
EF	0	0	96	0
AF	0	0	72	0
AE	−0.8333	−4.167	120	416.67
CE	−0.8333	−4.167	120	416.67
BE	0	5.00	72	0

$$\sum 1260\text{ kip}^2\cdot\text{in.}$$

$$1\cdot\Delta=\sum\frac{nNL}{AE}$$

$$1\text{ kip}\cdot(\Delta_E)_v=\frac{1260\text{ kip}^2\cdot\text{in.}}{AE}$$

$$(\Delta_E)_v=\frac{1260}{4.5[29.0(10^3)]}=0.00966\text{ in.}\downarrow\quad\textbf{Ans}$$

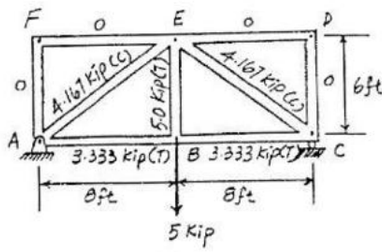

(a)

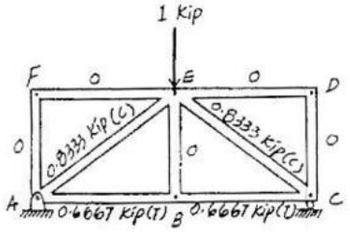

(c)

www.e-kitabi.com

c09.qxd 6/25/08 11:03 AM Page 239

© 2009 by R.C. Hibbeler. Published by Pearson Prentice Hall, Pearson Education, Inc., Upper Saddle River, NJ. All rights reserved. This material is protected under all copyright laws as they currently exist. No portion of this material may be reproduced, in any form or by any means, without permission in writing from the publisher.

9–21. Solve Prob. 9–20 using Castigliano's theorem.

Member Forces N: Member forces due to external force **P** and external applied forces are shown on the figure.

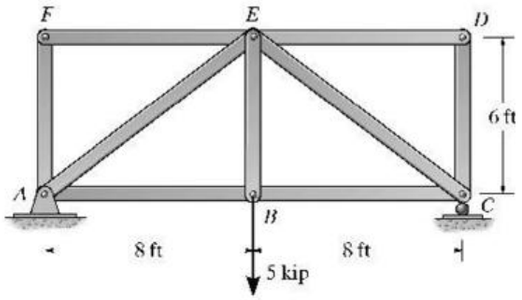

Castigliano's Second Theorem: Applying Eq. 9-27, we have

Member	N	$\frac{\partial N}{\partial P}$	$N(P=0)$	L	$N\left(\frac{\partial N}{\partial P}\right)L$
AB	$0.6667P+3.333$	0.6667	3.333	96	213.33
BC	$0.6667P+3.333$	0.6667	3.333	96	213.33
CD	0	0	0	72	0
DE	0	0	0	96	0
EF	0	0	0	96	0
AF	0	0	0	72	0
AE	$-(0.8333P+4.167)$	−0.8333	−4.167	120	416.67
CE	$-(0.8333P+4.167)$	−0.8333	−4.167	120	416.67
BE	5.0	0	5.00	72	0

$\sum 1260$ kip · in.

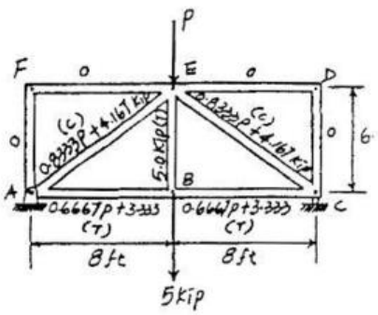

$$\Delta = \sum N\left(\frac{\partial N}{\partial P}\right)\frac{L}{AE}$$

$$(\Delta_E)_v = \frac{1260 \text{ kip} \cdot \text{in.}}{AE}$$

$$= \frac{1260}{4.5[29.0(10^3)]} = 0.00966 \text{ in.} \downarrow \quad \textbf{Ans}$$

9–22. Use the method of virtual work and determine the vertical displacement of point A. Each steel member has a cross-sectional area of 3 in^2. $E = 29(10^3)$ ksi.

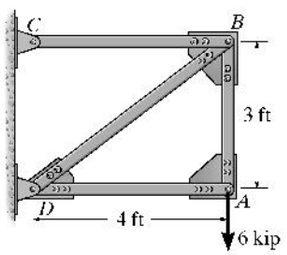

Member Real Forces N : As shown on figure (a).

Member Virtual Forces n : As shown on figure (b).

Virtual - Work Equation : Applying Eq. 9–15, we have

Member	n	N	L	nNL
AB	1.00	6.00	36	216
BC	1.333	8.00	48	512
AD	0	0	48	0
BD	−1.667	−10.0	60	1000

$\sum 1728$ k^2 · in.

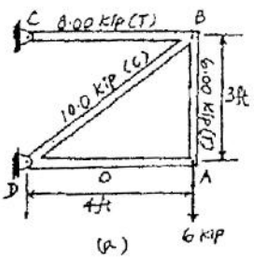

$$1 \cdot \Delta = \sum \frac{nNL}{AE}$$

$$1\text{k} \cdot (\Delta_A)_v = \frac{1728 \text{ k}^2 \cdot \text{in.}}{AE}$$

$$(\Delta_A)_v = \frac{1728}{3[29.0(10^3)]} = 0.0199 \text{ in.} \downarrow \quad \textbf{Ans}$$

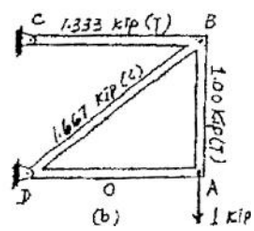

www.e-kitabi.com

c09.qxd 6/25/08 11:03 AM Page 240

© 2009 by R.C. Hibbeler. Published by Pearson Prentice Hall, Pearson Education, Inc., Upper Saddle River, NJ. All rights reserved. This material is protected under all copyright laws as they currently exist. No portion of this material may be reproduced, in any form or by any means, without permission in writing from the publisher.

9–23. Solve Prob. 9–22 using Castigliano's theorem.

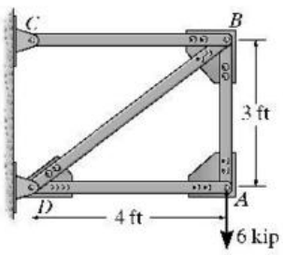

Member Forces N : Member forces due to external force **P** and external applied forces are shown on the figure.

Castigliano's Second Theorem : Applying Eq. 9–27, we have

Member	N	$\frac{\partial N}{\partial P}$	$N(P=6\text{ k})$	L	$N\left(\frac{\partial N}{\partial P}\right)L$
AB	$1.00P$	1.00	6.00	36	216
BC	$1.333P$	1.333	8.00	48	512
AD	0	0	0	48	0
BD	$-1.667P$	-1.667	-10.0	60	1000
					$\sum 1728$ k · in.

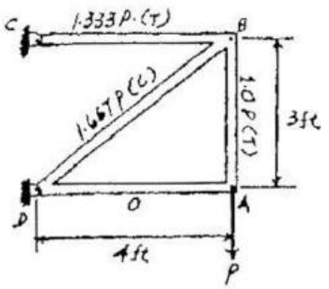

$$\Delta = \sum N\left(\frac{\partial N}{\partial P}\right)\frac{L}{AE}$$

$$(\Delta_A)_v = \frac{1728\text{ k}\cdot\text{in.}}{AE}$$

$$= \frac{1728}{3[29.0(10^3)]} = 0.0199\text{ in.} \downarrow \quad \textbf{Ans}$$

***9–24.** Use the method of virtual work and determine the vertical displacement of point B. Each steel member has a cross-sectional area of 3 in^2. $E = 29(10^3)$ ksi.

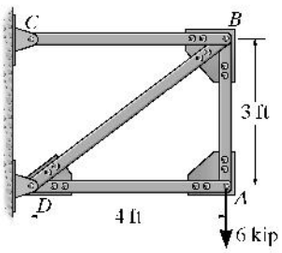

Member Real Forces N : As shown on figure (a).

Member Virtual Forces n : As shown on figure (b).

Virtual-Work Equation : Applying Eq. 9–15, we have

Member	n	N	L	nNL
AB	0	6.00	36	0
BC	1.333	8.00	48	512
AD	0	0	48	0
BD	-1.667	-10.0	60	1000
				$\sum 1512$ k² · in.

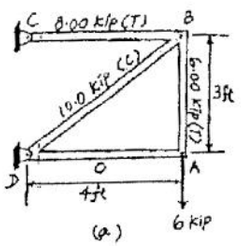

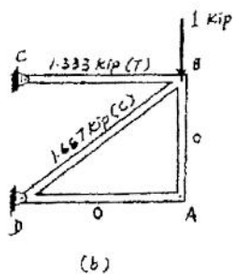

$$1\cdot\Delta = \sum\frac{nNL}{AE}$$

$$1\text{ k}\cdot(\Delta_B)_v = \frac{1512\text{ k}^2\cdot\text{in.}}{AE}$$

$$(\Delta_B)_v = \frac{1512}{3[29.0(10^3)]} = 0.0174\text{ in.} \downarrow \quad \textbf{Ans}$$

www.e-kitabi.com

c09.qxd 6/25/08 11:03 AM Page 241

© 2009 by R.C. Hibbeler. Published by Pearson Prentice Hall, Pearson Education, Inc., Upper Saddle River, NJ. All rights reserved. This material is protected under all copyright laws as they currently exist. No portion of this material may be reproduced, in any form or by any means, without permission in writing from the publisher.

9–25. Solve Prob. 9–24 using Castigliano's theorem.

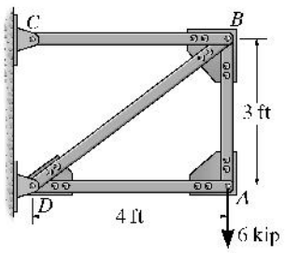

Member Forces N : Member forces due to external force **P** and external applied forces are shown on the figure.

Castigliano's Second Theorem : Applying Eq. 9–27, we have

Member	N	$\frac{\partial N}{\partial P}$	$N(P=0)$	L	$N\left(\frac{\partial N}{\partial P}\right)L$
AB	6.00	0	6.00	36	0
BC	$1.333P + 8.00$	1.333	8.00	48	512
AD	0	0	0	48	0
BD	$-(1.667P + 10.0)$	−1.667	−10.0	60	1000
					$\sum 1512$ k · in.

$$\Delta = \sum N\left(\frac{\partial N}{\partial P}\right)\frac{L}{AE}$$

$$(\Delta_A)_v = \frac{1512 \text{ k} \cdot \text{in.}}{AE}$$

$$= \frac{1512}{3[29.0(10^3)]} = 0.0174 \text{ in.} \downarrow \quad \textbf{Ans}$$

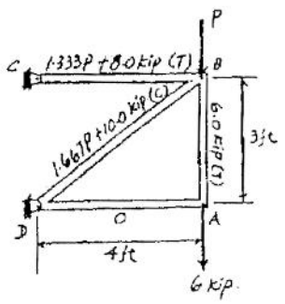

9–26. Determine the vertical displacement of joint A. Assume the members are pin connected at their end points. Take $A = 2$ in^2 and $E = 29(10^3)$ ksi for each member. Use the method of virtual work.

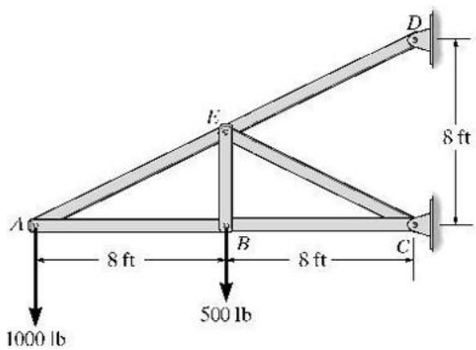

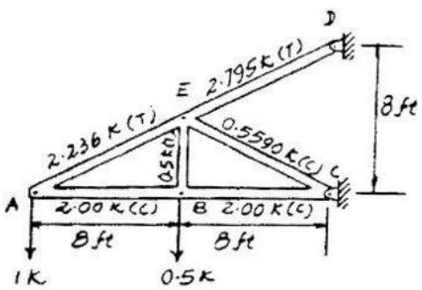

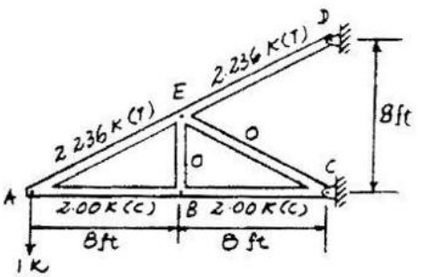

$$\Delta_{A_v} = \Sigma\frac{nNL}{AE} = \frac{1}{AE}[2(-2.00)(-2.00)(8) + (2.236)(2.236)(8.944) + (2.236)(2.795)(8.944)]$$

$$= \frac{164.62(12)}{(2)(29)(10^3)} = 0.0341 \text{ in.} \quad \textbf{Ans}$$

www.e-kitabi.com

c09.qxd 6/25/08 11:03 AM Page 242

© 2009 by R.C. Hibbeler. Published by Pearson Prentice Hall, Pearson Education, Inc., Upper Saddle River, NJ. All rights reserved. This material is protected under all copyright laws as they currently exist. No portion of this material may be reproduced, in any form or by any means, without permission in writing from the publisher.

9–27. Solve Prob. 9–26 using Castigliano's theorem.

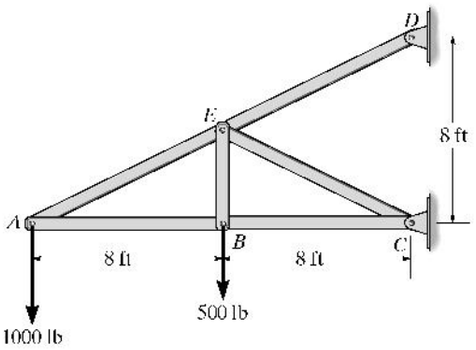

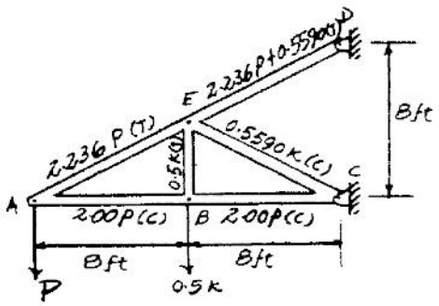

$$\Delta_{A_v} = \Sigma N\left(\frac{\partial N}{\partial P}\right)\frac{L}{AE} = \frac{1}{AE}[-2P(-2)(8) + (2.236P)(2.236)(8.944) + (-2P)(-2)(8) + (2.236P + 0.5590)(2.236)(8.944)](12)$$

Set $P = 1$ and evaluate

$$\Delta_{A_v} = \frac{164.62(12)}{(2)(29)(10^3)} = 0.0341 \text{ in.}$$

***9–28.** Remove the loads on the truss in Prob. 9-26 and determine the vertical displacement of joint A if members AB and BC experience a temperature increase of $\Delta T = 200°\text{F}$. Take $A = 2\text{ in}^2$ and $E = 29(10^3)$ ksi. Also, $\alpha = 6.60(10^{-6})/°\text{F}$.

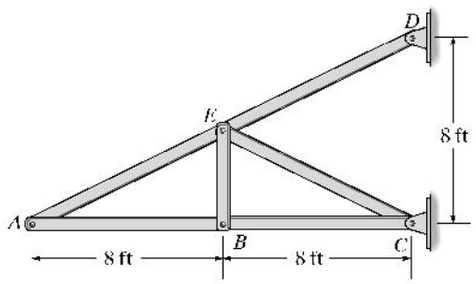

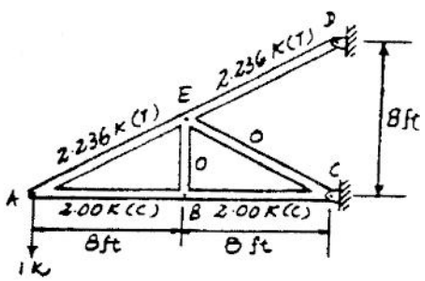

From Prob. 9.26

$$\Delta_{A_v} = \Sigma n\alpha\Delta TL = (-2)(6.60)(10^{-6})(200)(8)(12) + (-2)(6.60)(10^{-6})(200)(8)(12)$$
$$= -0.507 \text{ in.} = 0.507 \text{ in.} \uparrow \quad \textbf{Ans}$$

www.e-kitabi.com

c09.qxd 6/25/08 11:03 AM Page 243

© 2009 by R.C. Hibbeler. Published by Pearson Prentice Hall, Pearson Education, Inc., Upper Saddle River, NJ. All rights reserved. This material is protected under all copyright laws as they currently exist. No portion of this material may be reproduced, in any form or by any means, without permission in writing from the publisher.

9–29. Remove the loads on the truss in Prob. 9–26 and determine the vertical displacement of joint A if member AE is fabricated 0.5 in. too short.

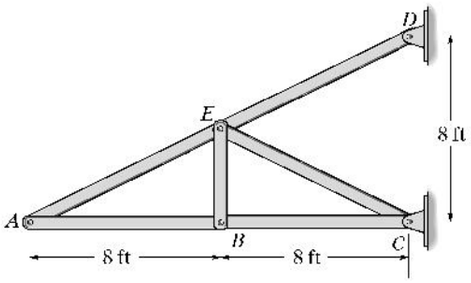

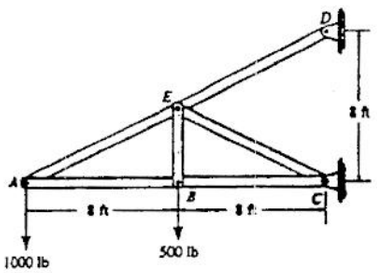

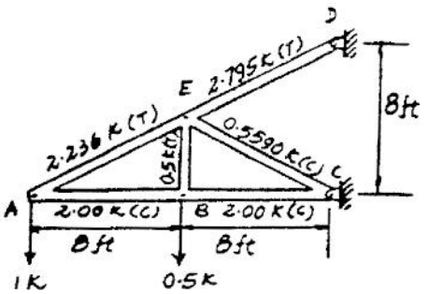

From Prob. 9-26

$$\Delta_{A_v} = \Sigma n \Delta L = (2.236)(-0.5)$$
$$= -1.12 \text{ in.} = 1.12 \text{ in.} \uparrow \quad \textbf{Ans}$$

9–30. Use the method of virtual work and determine the vertical displacement of joint C. Take $E = 29(10^3)$ ksi. Each steel member has a cross-sectional area of 4.5 in^2.

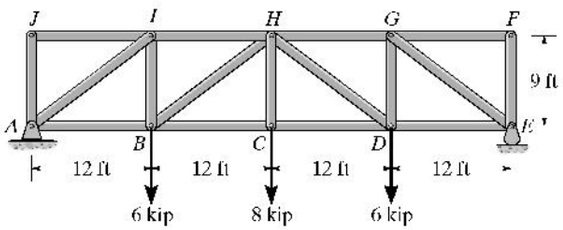

Member	N	n	L	nNL
AJ	0	0	108	0
AI	-16.67	-0.8333	180	2500
AB	13.33	0.6667	144	1280
BI	10	0.500	108	540
BH	-6.667	-0.3333	180	1000
BC	16.67	1.333	144	3584
CH	8.00	1.00	108	864
CD	16.67	1.333	144	3584
DH	-6.667	-0.3333	180	1000
DG	11.00	1.50	108	540
DE	13.33	0.6667	144	1280
EG	-16.67	-0.8333	180	2500
EF	0	0	108	0
FG	0	0	144	0
GH	-13.33	-0.6667	144	1280
HI	-13.33	-0.6667	144	1280
IJ	0	0	144	0
				Σ 21 232

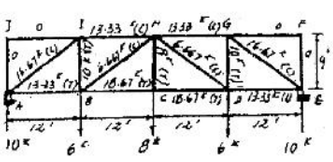

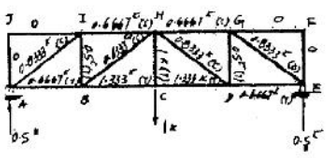

$$1 \cdot \Delta_{C_v} = \Sigma \frac{nNL}{AE}$$

$$\Delta_{C_v} = \frac{21\,232}{4.5\,(29\,(10^3))} = 0.163 \text{ in.} \quad \textbf{Ans}$$

www.e-kitabi.com

© 2009 by R.C. Hibbeler. Published by Pearson Prentice Hall, Pearson Education, Inc., Upper Saddle River, NJ. All rights reserved. This material is protected under all copyright laws as they currently exist. No portion of this material may be reproduced, in any form or by any means, without permission in writing from the publisher.

9–31. Solve Prob. 9–30 using Castigliano's theorem.

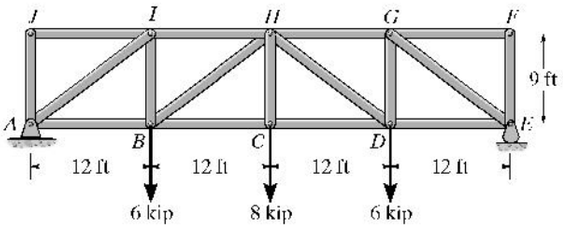

Member Forces N : Member forces due to external force **P** and external applied forces are shown on the figure.

Castigliano's Second Theorem : Applying Eq. 9–27, we have

Member	N	$\frac{\partial N}{\partial P}$	$N(P = 8\ \text{kip})$	L	$N\left(\frac{\partial N}{\partial P}\right)L$
AB	$0.6667P + 8.00$	0.6667	13.33	144	1280.00
DE	$0.6667P + 8.00$	0.6667	13.33	144	1280.00
BC	$1.333P + 8.00$	1.333	18.67	144	3584.00
CD	$1.333P + 8.00$	1.333	18.67	144	3584.00
AJ	0	0	0	108	0
EF	0	0	0	108	0
IJ	0	0	0	144	0
FG	0	0	0	144	0
HI	$-(0.6667P + 8.00)$	−0.6667	−13.33	144	1280.00
GH	$-(0.6667P + 8.00)$	−0.6667	−13.33	144	1280.00
AI	$-(0.8333P + 10.0)$	−0.8333	−16.67	180	2500.00
EG	$-(0.8333P + 10.0)$	−0.8333	−16.67	180	2500.00
BI	$0.500P + 6.00$	0.500	10.0	108	540.00
DG	$0.500P + 6.00$	0.500	10.0	108	540.00
BH	$-0.8333P$	−0.8333	−6.667	180	1000.00
DH	$-0.8333P$	−0.8333	−6.667	180	1000.00
CH	$1.00P$	1.00	8.00	108	864.00

$\sum 21232\ \text{k}\cdot\text{in.}$

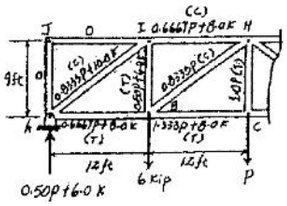

$$\Delta = \sum N\left(\frac{\partial N}{\partial P}\right)\frac{L}{AE}$$

$$(\Delta_C)_v = \frac{21232\ \text{k}\cdot\text{in.}}{AE} = \frac{21232}{4.5[29.0(10^3)]} = 0.163\ \text{in.}\ \downarrow \quad \textbf{Ans}$$

***9–32.** Determine the vertical displacement of joint B. For each member $A = 1.5\ \text{in}^2$, $E = 29(10^3)$ ksi. Use the method of virtual work.

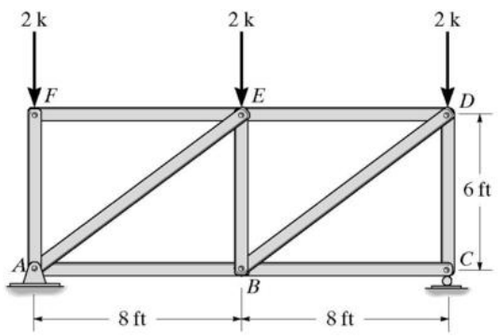

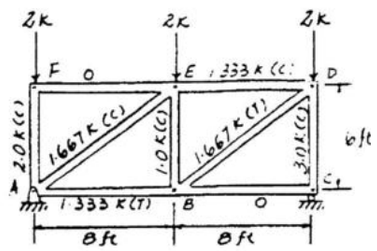

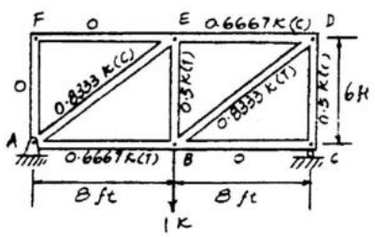

$$1 \cdot \Delta_{B_v} = \sum \frac{nNL}{AE}$$

$$\Delta_{B_v} = \frac{1}{AE}\{(-1.667)(-0.8333)(10) + (1.667)(0.8333)(10) + (0.6667)(1.333)(8) + (-0.6667)(-1.333)($$

$$+ (-1)(0.5)(6) + (-0.5)(-3)(6)\}(12)$$

$$= \frac{576}{1.5\,(29)(10^3)} = 0.0132\ \text{in.} \quad \textbf{Ans}$$

www.e-kitabi.com

c09.qxd 6/25/08 11:03 AM Page 245

© 2009 by R.C. Hibbeler. Published by Pearson Prentice Hall, Pearson Education, Inc., Upper Saddle River, NJ. All rights reserved. This material is protected under all copyright laws as they currently exist. No portion of this material may be reproduced, in any form or by any means, without permission in writing from the publisher.

9–33. Solve Prob. 9–32 using Castigliano's theorem.

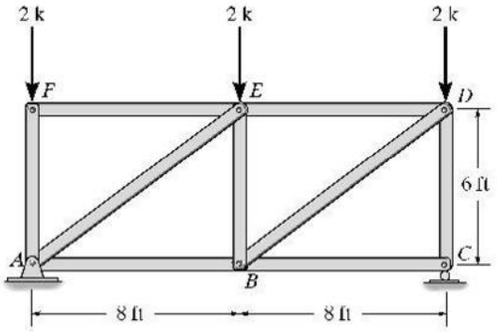

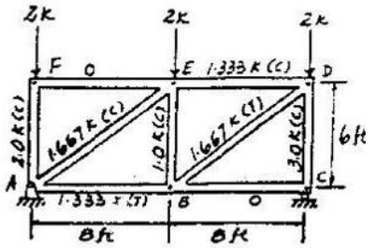

$$\Delta_{B_y} = \Sigma N\left(\frac{\partial N}{\partial P}\right)\frac{L}{AE} = [(-1.333)(-0.6667)(8) + (1.333)(0.6667)(8) + (-1)(0.5)(6) + (-1.667)(-0.8333)(10) + (1.667)(0.8333)(10) + (-3)(-0.5)(6)]\frac{12}{AE}$$

$$= \frac{576}{1.5\,(29)(10^3)} = 0.0132 \text{ in.} \qquad \textbf{Ans}$$

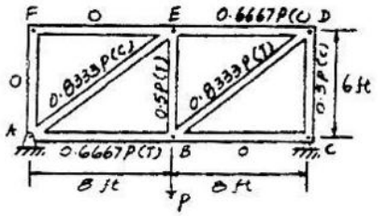

9–34. Determine the vertical displacement of joint E. For each member $A = 1.5\text{ in}^2$, $E = 29(10^3)$ ksi. Use the method of virtual work.

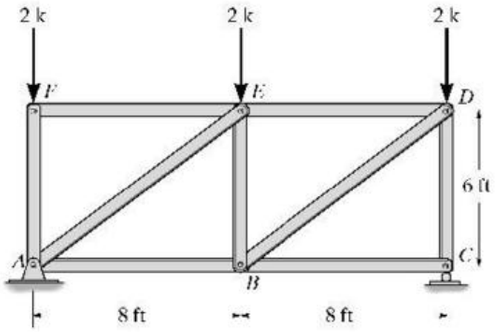

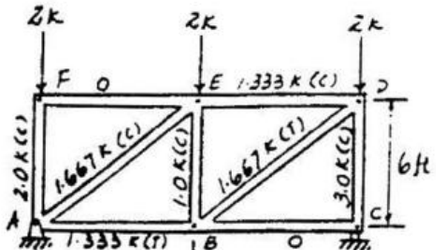

$$\Delta_E = \Sigma\frac{nNL}{AE} = \frac{1}{AE}\{(-0.8333)(-1.667)(10) + (0.8333)(1.6667)(10) + (0.6667)(1.333)(8) + (-0.6667)(-1.333)(8) + (-1)(-0.5)(6) + (-0.5)(-3)(6)\}(12)$$

$$= \frac{648}{1.5\,(29)(10^3)} = 0.0149 \text{ in.} \qquad \textbf{Ans}$$

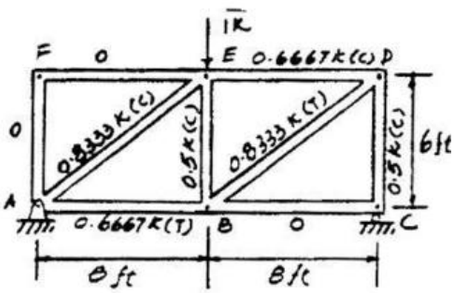

www.e-kitabi.com

c09.qxd 6/25/08 11:03 AM Page 246

© 2009 by R.C. Hibbeler. Published by Pearson Prentice Hall, Pearson Education, Inc., Upper Saddle River, NJ. All rights reserved. This material is protected under all copyright laws as they currently exist. No portion of this material may be reproduced, in any form or by any means, without permission in writing from the publisher.

9–35. Solve Prob. 9–34 using Castigliano's theorem.

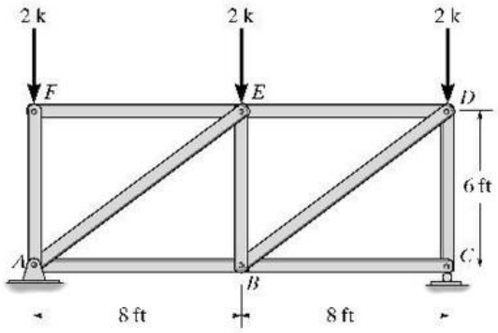

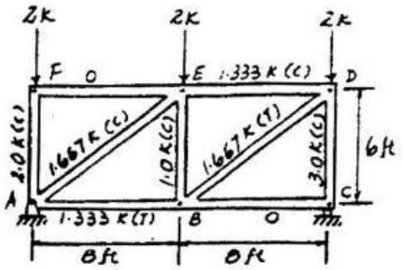

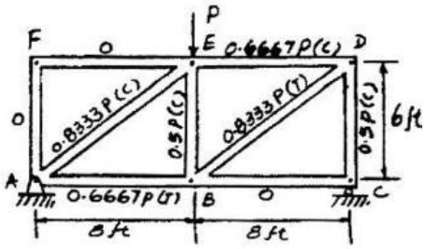

$$\Delta_{E_v} = \Sigma N\left(\frac{\partial N}{\partial P}\right)\frac{L}{AE} = \{(-1.667)(-0.8333)(10) + (1.667)(0.8333)(10) + (-1)(-0.5)(6) + (-0.5)(-3)(6) + (0.6667)(1.333)(8) + (-0.6667)(-1.333)(8)\}\frac{12}{AE}$$

$$= \frac{648}{1.5\,(29)(10^3)} = 0.0149\text{ in.} \qquad \textbf{Ans}$$

***9–36.** Determine the vertical displacement of joint D of the truss. Each member has a cross-sectional area of $A = 300\text{ mm}^2$. $E = 200\text{ GPa}$. Use the method of virtual work.

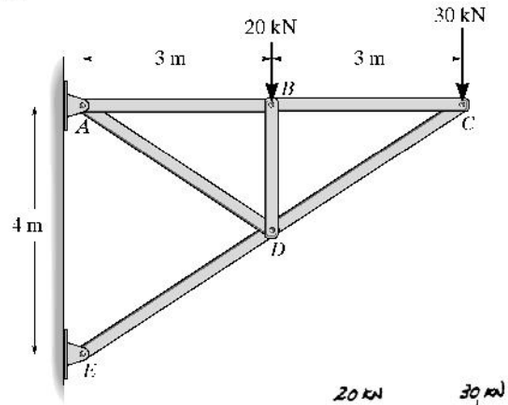

MEMBER	n	N	L	nNL
AB	0	45.0	3	0
AD	0.9014	18.03	$\sqrt{13}$	58.59
BC	0	45.0	3	0
BD	0	−20.0	2	0
CD	0	−54.08	$\sqrt{13}$	0
DE	−0.9014	−72.11	$\sqrt{13}$	234.36
				$\Sigma = 292.95$

$$1\cdot\Delta_{D_v} = \Sigma\frac{nNL}{AE}$$

$$\Delta_{D_v} = \frac{292.95(10^3)}{300(10^{-6})(200)(10^9)} = 4.88(10^{-3})\text{ m} = 4.88\text{ mm}$$

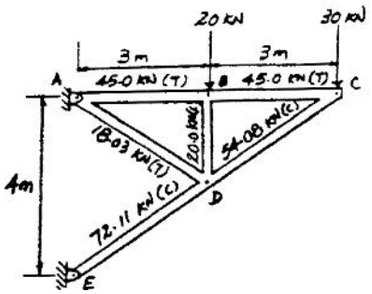

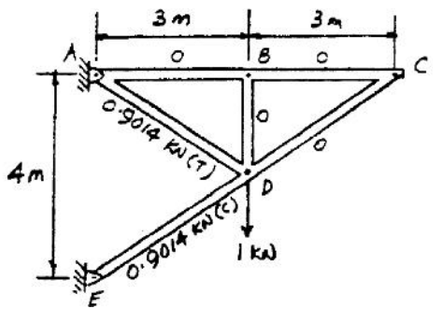

www.e-kitabi.com

© 2009 by R.C. Hibbeler. Published by Pearson Prentice Hall, Pearson Education, Inc., Upper Saddle River, NJ. All rights reserved. This material is protected under all copyright laws as they currently exist. No portion of this material may be reproduced, in any form or by any means, without permission in writing from the publisher.

9–37. Solve Prob. 9–36 using Castigliano's theorem.

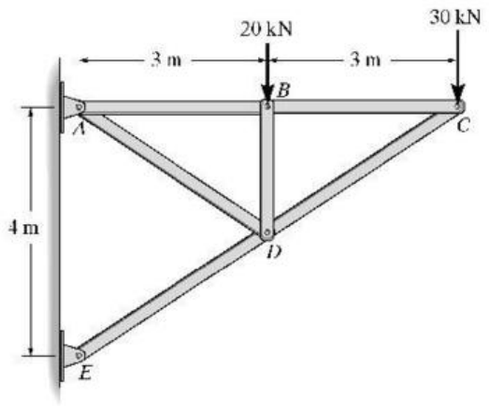

MEMBER	N	$\partial N/\partial P$	$N(P=0)$	L	$N(\partial N/\partial P)L$
AB	45	0	45	3	0
AD	$0.25\sqrt{13}P+5\sqrt{13}$	$0.25\sqrt{13}$	$5\sqrt{13}$	$\sqrt{13}$	58.59
BC	45	0	45	3	0
BD	-20	0	-20	2	0
CD	$-15\sqrt{13}$	0	$-15\sqrt{13}$	$\sqrt{13}$	0
DE	$-(0.25\sqrt{13}P+20\sqrt{13})$	$-0.25\sqrt{13}$	$-20\sqrt{13}$	$\sqrt{13}$	234.36
					$\Sigma = 292.95$

$$\Delta_{D_v} = \Sigma N\left(\frac{\partial N}{\partial P}\right)\frac{L}{AE} = \frac{292.95}{AE} = \frac{292.95(10^3)}{300(10^{-6})(200)(10^9)}$$

$$= 4.88(10^{-3})\text{ m} = 4.88\text{ mm} \quad \textbf{Ans}$$

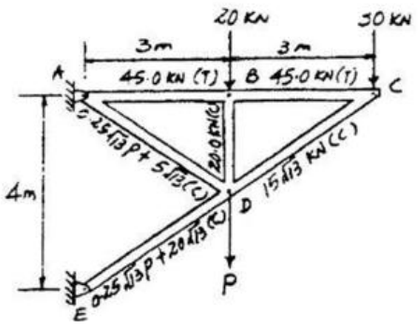

9–38. Determine the horizontal displacement of joint C of the truss. Each member has a cross-sectional area of 3 in^2. $E = 29(10^3)\text{ ksi}$. Use the method of virtual work.

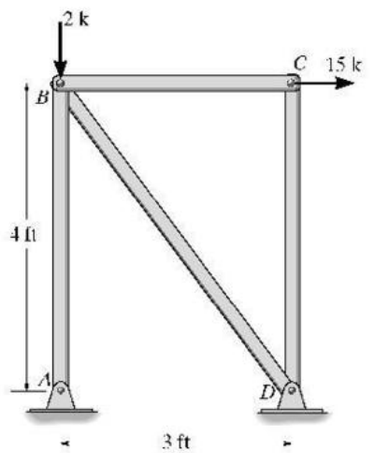

MEMBER	n	N	L(in.)	nNL
AB	1.333	18.00	48	1152
BC	1.000	15.00	36	540
BD	-1.667	-25.00	60	2500
CD	0	0	48	0
			$\Sigma =$	4192

$$1\cdot\Delta_{C_h} = \Sigma\frac{nNL}{AE}$$

$$\Delta_{C_h} = \frac{4192}{(3)(29)(10^3)} = 0.0482\text{ in.} \quad \textbf{Ans}$$

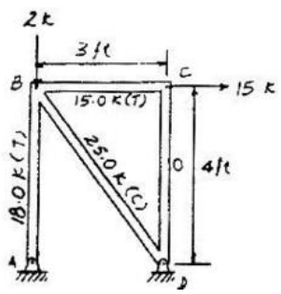

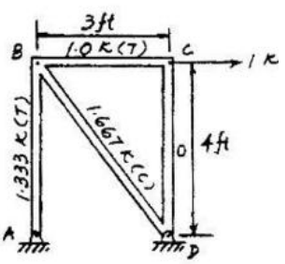

www.e-kitabi.com

c09.qxd 6/25/08 11:03 AM Page 248

© 2009 by R.C. Hibbeler. Published by Pearson Prentice Hall, Pearson Education, Inc., Upper Saddle River, NJ. All rights reserved. This material is protected under all copyright laws as they currently exist. No portion of this material may be reproduced, in any form or by any means, without permission in writing from the publisher.

9–39. Solve Prob. 9–38 using Castigliano's theorem.

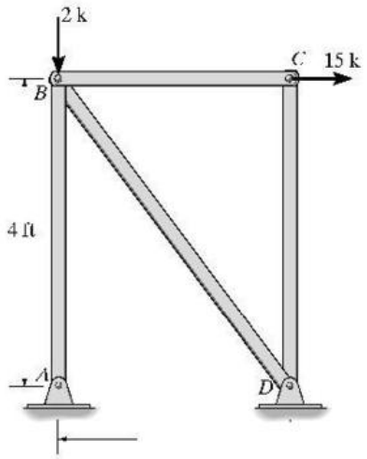

MEMBER	N	$\partial N/\partial P$	$N(P=15)$	L	$N(\partial N/\partial P)L$
AB	$-(2-1.333P)$	1.333	18	48	1152
BC	P	1.0	15	36	540
BD	$-1.6667P$	-1.6667	25	60	2500
CD	0	0	0	0	0
					$\Sigma = 4192$

$$\Delta_{C_h} = \Sigma N\left(\frac{\partial N}{\partial P}\right)\frac{L}{AE} = \frac{4192}{3(29)(10^3)} = 0.0482 \text{ in.} \quad \textbf{Ans}$$

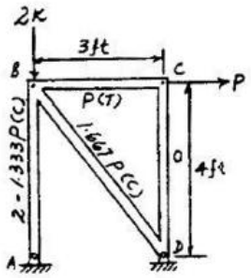

***9–40.** Determine the horizontal displacement of joint B of the truss. Each member has a cross-sectional area of 3 in^2. $E = 29(10^3)$ ksi. Use the method of virtual work.

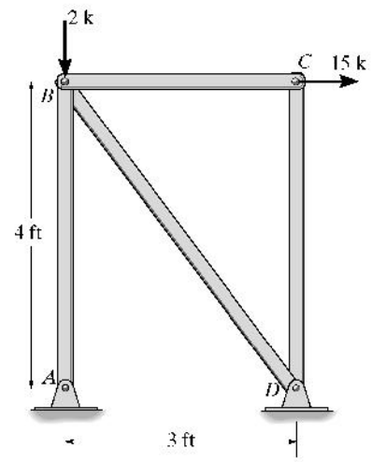

MEMBER	n	N	L(in.)	nNL
AB	1.333	18.0	48	1152
BC	0	15.0	36	0
BD	-1.667	-25.0	60	2500
CD	0	0	48	0
				$\Sigma = 3652$

$$1 \cdot \Delta_{B_h} = \Sigma\frac{nNL}{AE}$$

$$\Delta_{B_h} = \frac{3652}{(3)(29)(10^3)} = 0.0420 \text{ in.} \quad \textbf{Ans}$$

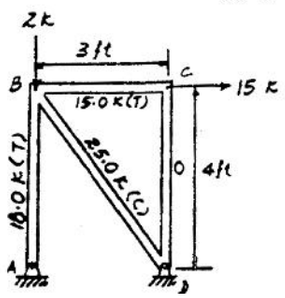

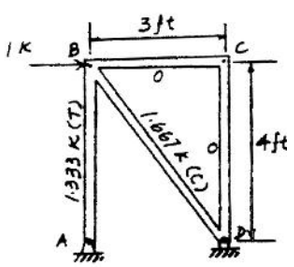

www.e-kitabi.com

c09.qxd 6/25/08 11:03 AM Page 249

© 2009 by R.C. Hibbeler. Published by Pearson Prentice Hall, Pearson Education, Inc., Upper Saddle River, NJ. All rights reserved. This material is protected under all copyright laws as they currently exist. No portion of this material may be reproduced, in any form or by any means, without permission in writing from the publisher.

9–41. Solve Prob. 9–40 using Castigliano's theorem.

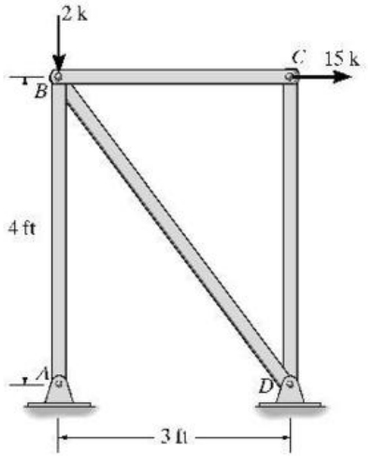

MEMBER	N	$\partial N/\partial P$	$N(P=0)$	L	$N(\partial N/\partial P)L$
AB	$1.333P + 18$	1.333	18	48	1152
BC	15	0	15	36	0
BD	$-(1.667P + 25)$	−1.667	−25	60	2500
CD	0	0	0	48	0
					$\Sigma = 3652$

$$\Delta_{B_x} = \Sigma N\left(\frac{\partial N}{\partial P}\right)\frac{L}{AE} = \frac{3652}{AE} = \frac{3652}{(3)(29)(10^3)} = 0.0420 \text{ in.} \quad \textbf{Ans}$$

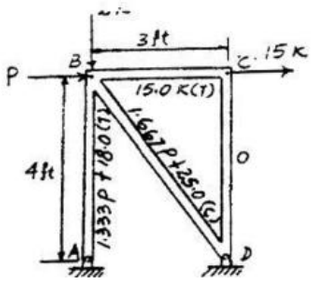

9–42. Determine the horizontal deflection at C. Use the method of virtual work. Assume the members are pin connected at their end points. AE is constant.

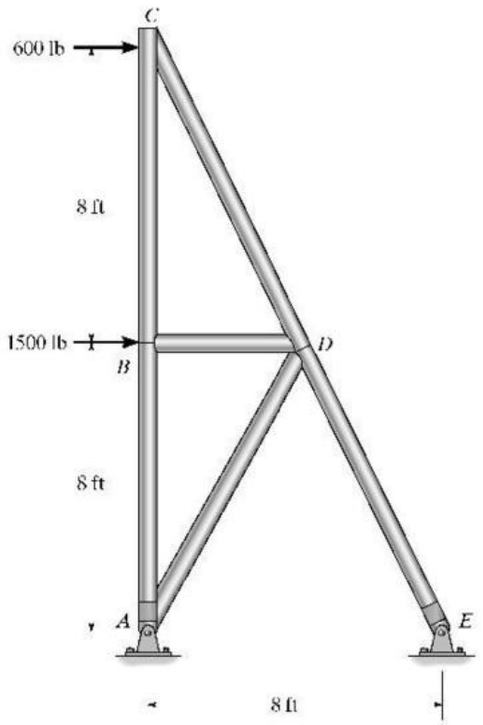

$$(\Delta_C)_h = \sum \frac{nNL}{AE} = 2\left[\frac{(2)(1200)(8)(12)}{AE}\right] + \frac{(-2.236)(-1341.64)(\sqrt{80})(12)}{AE} + \frac{(-2.236)(-3018.69)(\sqrt{80})(12)}{AE}$$

$$= \frac{1.51(10^6)\text{ lb}\cdot\text{in.}}{AE} \rightarrow \quad \textbf{Ans}$$

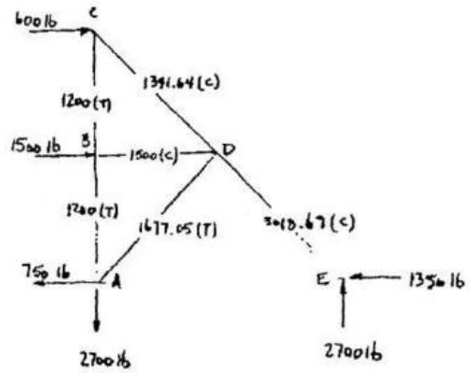

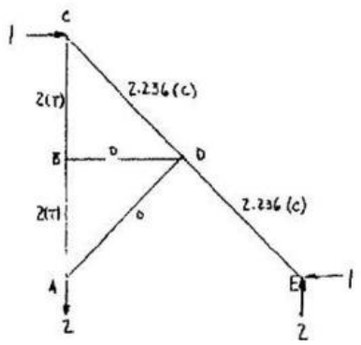

www.e-kitabi.com

c09.qxd 6/25/08 11:03 AM Page 250

© 2009 by R.C. Hibbeler. Published by Pearson Prentice Hall, Pearson Education, Inc., Upper Saddle River, NJ. All rights reserved. This material is protected under all copyright laws as they currently exist. No portion of this material may be reproduced, in any form or by any means, without permission in writing from the publisher.

9–43. Remove the loads on the truss in Prob. 9–42 and determine the horizontal displacement of point C if members AB and BC experience a temperature increase of $\Delta T = 200°F$. Take $A = 2\,in^2$ and $E = 29(10^3)$ ksi. Also, $\alpha = 10^{-6}/°F$.

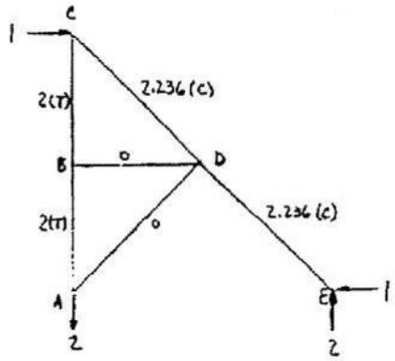

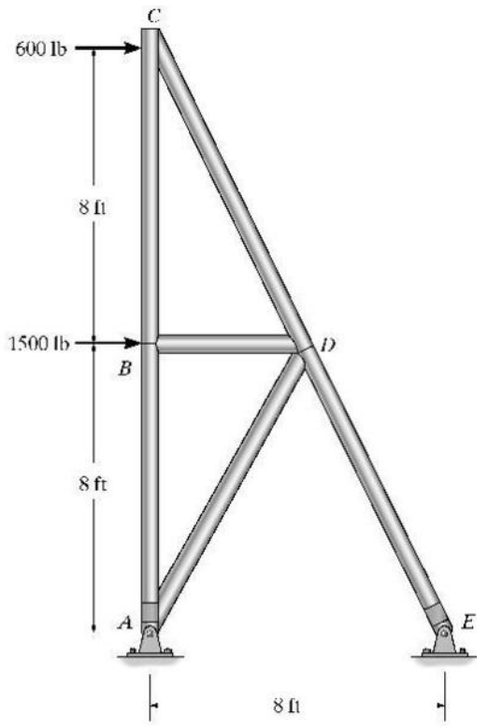

$(\Delta_C)_h = \Sigma n \alpha \Delta T L = (2)(10^{-6})(200)(8)(12) + (2)(10^{-6})(200)(8)(12) = 0.0768$ in. → Ans

***9–44.** Remove the loads on the truss in Prob. 9–42 and determine the horizontal displacement of point C if member CD is fabricated 0.5 in. too short.

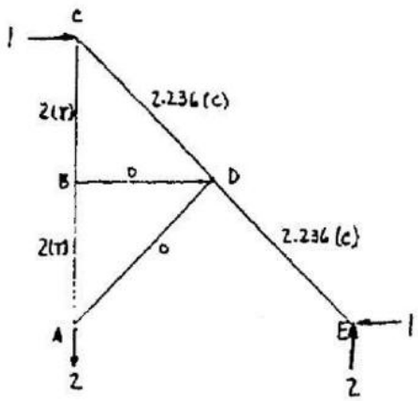

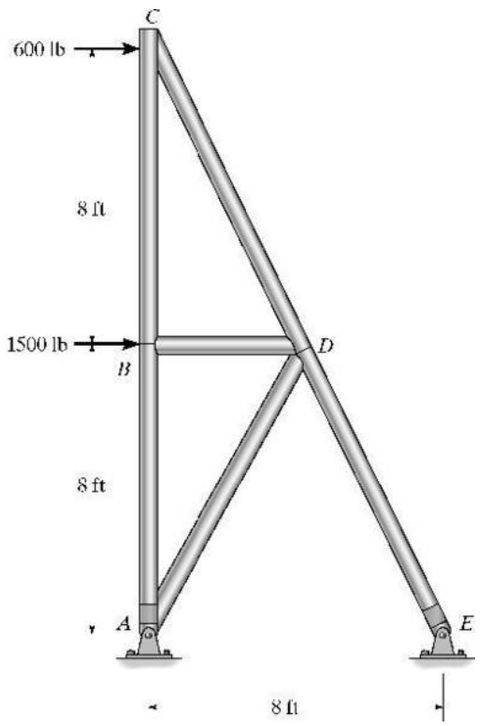

$(\Delta_C)_h = \Sigma n \Delta L = (-2.236)(-0.5) = 1.12$ in. → **Ans**

www.e-kitabi.com

c09.qxd 6/25/08 11:03 AM Page 251

© 2009 by R.C. Hibbeler. Published by Pearson Prentice Hall, Pearson Education, Inc., Upper Saddle River, NJ. All rights reserved. This material is protected under all copyright laws as they currently exist. No portion of this material may be reproduced, in any form or by any means, without permission in writing from the publisher.

9–45. Use the method of virtual work and determine the vertical displacement of joint A. Each member has a cross-sectional area of 400 mm^2. $E = 200$ GPa.

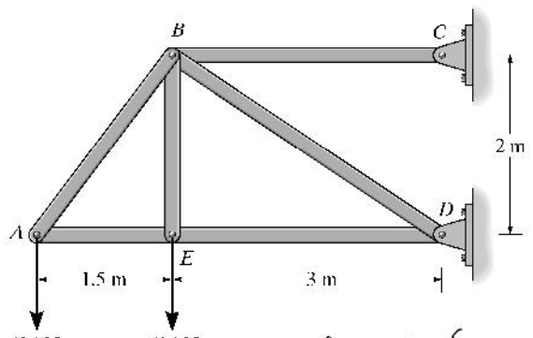

Member	n	N	L	nNL
AB	1.25	50	2.5	156.25
AE	−0.75	−30	1.5	33.75
BC	2.25	180	3.0	1215.00
BD	$-0.5\sqrt{13}$	$-50\sqrt{13}$	$\sqrt{13}$	1171.80
BE	0	60	2.0	0
DE	−0.75	−30	3.0	67.5

$\Sigma = 2644.30$

$$1 \cdot \Delta_{A_y} = \Sigma \frac{nNL}{AE}$$

$$\Delta_{A_y} = \frac{2644.30(10^3)}{400(10^{-6})(200)(10^9)} = 0.0331\text{m} = 33.1\text{ mm} \quad \textbf{Ans}$$

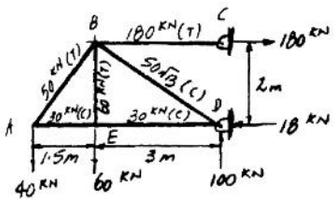

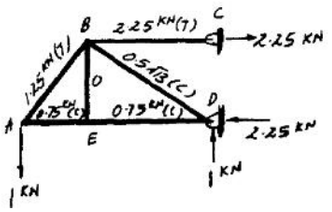

9–46. Solve Prob. 9–45 using Castigliano's theorem.

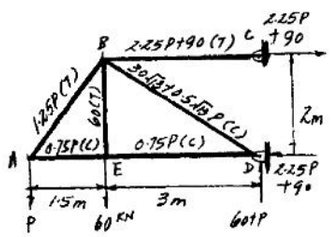

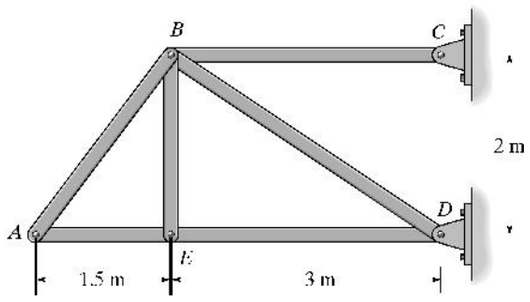

Member	N	$\partial N/\partial P$	$N(P=40)$	L	$N(\partial N/\partial P)L$
AB	$1.25P$	1.25	50	2.5	156.25
AE	$-0.75P$	−0.75	−30	1.5	33.75
BC	$2.25P + 90$	2.25	180	3.0	1215.00
BD	$-(30\sqrt{13} + 0.5\sqrt{13}P)$	$-0.5\sqrt{13}$	$-50\sqrt{13}$	$\sqrt{13}$	1171.80
BE	60	0	60	2.0	0
DE	$-0.75P$	−0.75	−30	3.0	67.5

$\Sigma = 2644.30$

$$\Delta_{A_y} = \Sigma N\left(\frac{\partial N}{\partial P}\right)\frac{L}{AE} = \frac{2644.30(10^3)}{400(10^{-6})(200)(10^9)} = 0.0331\text{ m} = 33.1\text{ mm} \quad \textbf{Ans}$$

www.e-kitabi.com

c09.qxd 6/25/08 11:03 AM Page 252

© 2009 by R.C. Hibbeler. Published by Pearson Prentice Hall, Pearson Education, Inc., Upper Saddle River, NJ. All rights reserved. This material is protected under all copyright laws as they currently exist. No portion of this material may be reproduced, in any form or by any means, without permission in writing from the publisher.

9–47. Use the method of virtual work and determine the displacement of point *C*. *EI* is constant.

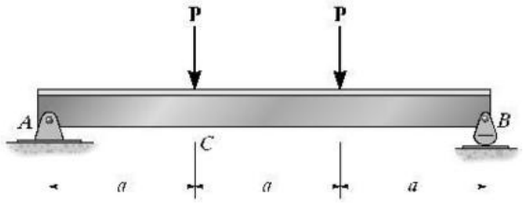

Real Moment Function $M(x)$: As shown on figure(a).

Virtual Moment Functions $m(x)$: As shown on figure(b).

Virtual Work Equation : For the displacement at point *C*, apply Eq. 9–18

$$1\cdot\Delta=\int_0^L\frac{mM}{EI}\,dx$$

$$1\cdot\Delta_C=\frac{1}{EI}\int_0^a\left(\frac{2}{3}x_1\right)(Px_1)\,dx_1+\frac{1}{EI}\int_a^{2a}\frac{1}{3}(2a-x_2)(Pa)\,dx_2+\frac{1}{EI}\int_0^a\left(\frac{x_3}{3}\right)(Px_3)\,dx_3$$

$$\Delta_C=\frac{5Pa^3}{6EI}\downarrow \qquad \text{Ans}$$

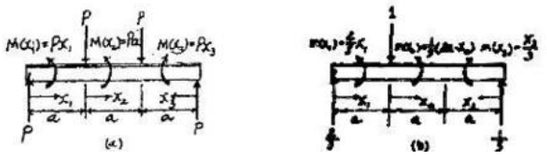

***9–48.** Solve Prob. 9–47 using Castigliano's theorem.

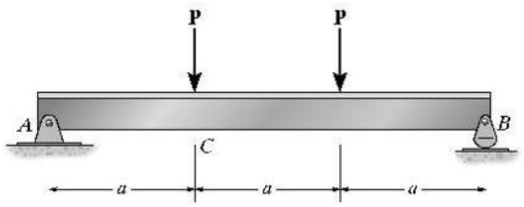

Internal Moment Function $M(x)$: The internal moment function in terms of the load P' and externally applied load are shown on the figure.

Castigliano's Second Theorem : The displacement at *C* can be determined using Eq. 9–28 with $\frac{\partial M(x_1)}{\partial P'}=\frac{2}{3}x_1$, $\frac{\partial M(x_3)}{\partial P'}=\frac{x_3}{3}$, $\frac{\partial M(x_2)}{\partial P'}=\frac{1}{3}(2a-x_2)$ and setting $P'=P$. 9–28

$$\Delta=\int_0^L M\left(\frac{\partial M}{\partial P'}\right)\frac{dx}{EI}$$

$$\Delta_C=\frac{1}{EI}\int_0^a(Px_1)\left(\frac{2}{3}x_1\right)dx_1+\frac{1}{EI}\int_a^{2a}(Pa)\left[\frac{1}{3}(2a-x_2)\right]dx_2+\frac{1}{EI}\int_0^a(Px_3)\left(\frac{x_3}{3}\right)dx_3$$

$$=\frac{5Pa^3}{6EI}\downarrow \qquad \text{Ans}$$

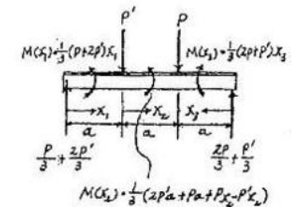

9–49. Use the method of virtual work and determine the slope at point *C*. *EI* is constant.

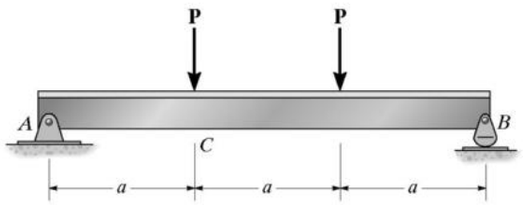

Real Moment Function $M(x)$: As shown on figure(a).

Virtual Moment Functions $m_\theta(x)$: As shown on figure(b).

Virtual Work Equation : For the slope at point *C*, apply Eq. 9–19.

$$1\cdot\theta=\int_0^L\frac{m_\theta M}{EI}\,dx$$

$$1\cdot\theta_C=\frac{1}{EI}\int_0^a\left(-\frac{x_1}{3a}\right)(Px_1)\,dx_1+\frac{1}{EI}\int_0^{2a}\frac{1}{3a}(2a-x_2)(Pa)\,dx_2+\frac{1}{EI}\int_0^a\left(\frac{x_3}{3a}\right)(Px_3)\,dx_3$$

$$\theta_C=\frac{Pa^2}{2EI} \qquad \text{Ans}$$

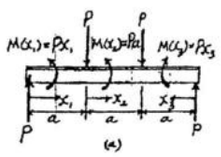

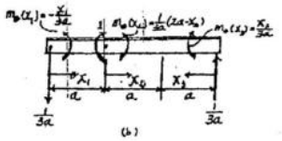

www.e-kitabi.com

c09.qxd 6/25/08 11:03 AM Page 253

© 2009 by R.C. Hibbeler. Published by Pearson Prentice Hall, Pearson Education, Inc., Upper Saddle River, NJ. All rights reserved. This material is protected under all copyright laws as they currently exist. No portion of this material may be reproduced, in any form or by any means, without permission in writing from the publisher.

9–50. Use the method of virtual work and determine the slope at point A. EI is constant.

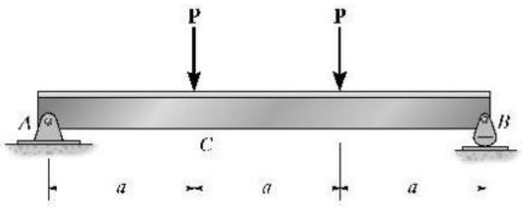

Real Moment Function $M(x)$: As shown on figure(a).

Virtual Moment Functions $m_\theta(x)$: As shown on figure(b).

Virtual Work Equation : For the slope at point A, apply Eq. 9–19.

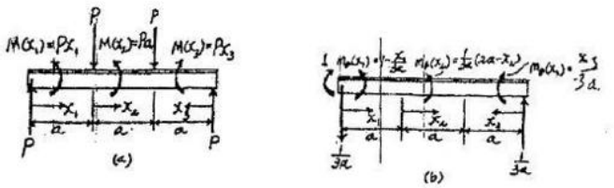

$$1\cdot\theta = \int_0^L \frac{m_\theta M}{EI}\,dx$$

$$1\cdot\theta_A = \frac{1}{EI}\int_0^a \left(1-\frac{x_1}{3a}\right)(Px_1)\,dx_1 + \frac{1}{EI}\int_0^a \frac{1}{3a}(2a-x_2)(Pa)\,dx_2 + \frac{1}{EI}\int_0^a \left(\frac{x_3}{3a}\right)(Px_3)\,dx_3$$

$$\theta_A = \frac{Pa^2}{EI} \qquad \textbf{Ans}$$

9–51. Determine the displacement of point C of the beam having a moment of inertia of $I = 53.8\ \text{in}^4$. Take $E = 29(10^3)$ ksi.

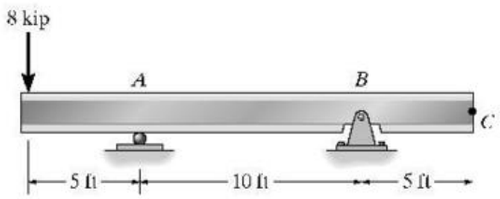

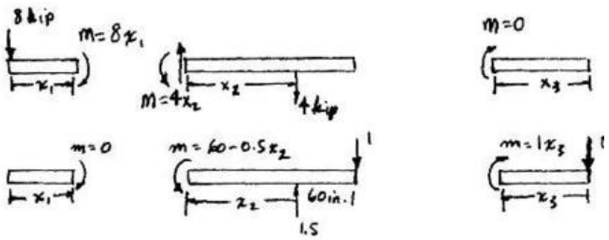

$$1\cdot\Delta_C = \int_0^L \frac{mM}{EI}\,dx$$

$$\Delta_C = \frac{1}{EI}\left[0 + \int_0^{120}(60-0.5)(4x_2)\,dx_2 + 0\right]$$

$$= \frac{576\,000}{EI} = \frac{576\,000}{29(10^3)(53.8)} = 0.369\ \text{in.} \qquad \textbf{Ans}$$

***9–52.** Determine the slope at B of the beam having a moment of inertia of $I = 53.8\ \text{in}^4$. Take $E = 29(10^3)$ ksi.

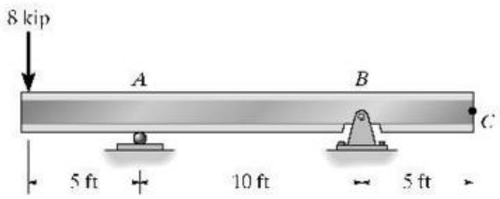

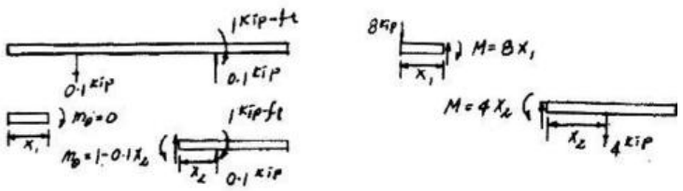

$$1\cdot\theta_B = \int_0^L \frac{m_\theta M}{EI}\,dx$$

$$\theta_B = \frac{1}{EI}\left[\int_0^5 (0)(8x_1)\,dx_1 + \int_0^{10}(1-0.1x_2)4x_2\,dx_2\right]$$

$$= \frac{66.67\ \text{kip}\cdot\text{ft}^2}{EI} = \frac{66.67(12^2)}{29(10^3)(53.8)} = 6.153(10^{-3})\text{rad} = 0.353^\circ \qquad \textbf{Ans}$$

www.e-kitabi.com

c09.qxd 6/25/08 11:03 AM Page 254

© 2009 by R.C. Hibbeler. Published by Pearson Prentice Hall, Pearson Education, Inc., Upper Saddle River, NJ. All rights reserved. This material is protected under all copyright laws as they currently exist. No portion of this material may be reproduced, in any form or by any means, without permission in writing from the publisher.

9–53. Use the method of virtual work and determine the displacement of point C of the beam made from steel. $E = 29(10^3)$ ksi, $I = 245\ \text{in}^4$.

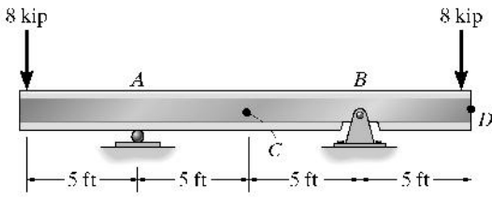

$$1 \cdot \Delta_C = \int_0^L \frac{m M}{E I} dx$$

$$\Delta_C = 0 + 2\int_0^{60} \frac{\left(-\frac{x}{2}\right)(-480)}{E I} dx$$

$$= \frac{864\,000}{29\,(10^3)(245)} = 0.122\ \text{in.} \quad \textbf{Ans}$$

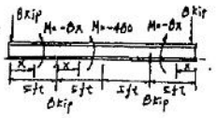

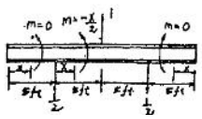

9–54. Use the method of virtual work and determine the slope at A of the beam made from steel. $E = 29(10^3)$ ksi, $I = 245\ \text{in}^4$.

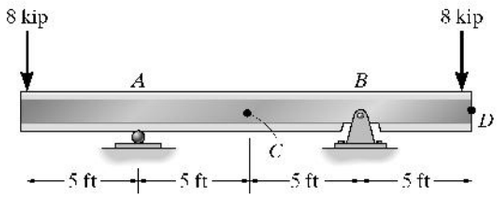

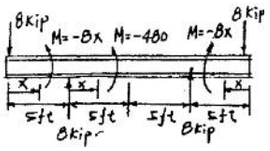

$$1 \cdot \theta_A = \int_0^L \frac{m_\theta M}{E I} dx$$

$$\theta_A = 0 + \int_0^{120} \frac{\left(\frac{x}{120} - 1\right)(-480)}{E I} dx$$

$$= \frac{28\,800}{29\,(10^3)(245)} = 4.05\,(10^{-3})\ \text{rad} \quad \textbf{Ans}$$

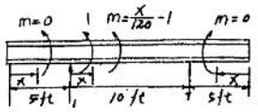

9–55. Solve Prob. 9–54 using Castigliano's theorem.

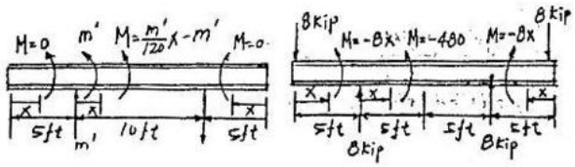

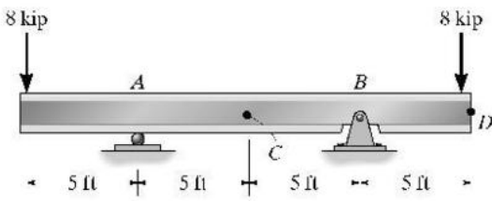

$$\theta_A = \int_0^L M\left(\frac{\partial M}{\partial M'}\right)\frac{dx}{E I}$$

$$= 0 + \int_0^{120} \frac{-480\left(\frac{x}{120} - 1\right)}{E I} dx = 0 + \frac{-480\left[\frac{1}{2}\left(\frac{120^2}{120}\right) - 120\right]}{E I}$$

$$= \frac{28\,800}{29\,(10^3)(245)} = 4.05\,(10^{-3})\ \text{rad} \quad \textbf{Ans}$$

www.e-kitabi.com

© 2009 by R.C. Hibbeler. Published by Pearson Prentice Hall, Pearson Education, Inc., Upper Saddle River, NJ. All rights reserved. This material is protected under all copyright laws as they currently exist. No portion of this material may be reproduced, in any form or by any means, without permission in writing from the publisher.

***9–56.** Determine the slope at A. EI is constant.

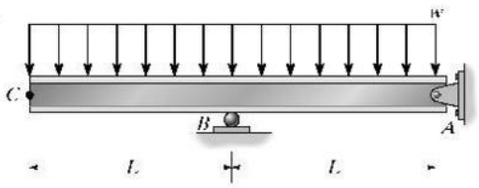

$$\theta_A = \int_0^L \frac{m_\theta M}{EI}\,dx$$

$$= 0 + \int_0^L \frac{\left(\frac{x}{L}-1\right)\left(\frac{-wx^2}{2}\right)}{EI}\,dx$$

$$= \frac{-\frac{wL^4}{8L} + \frac{wL^3}{6}}{EI} = \frac{wL^3}{24EI}$$ **Ans**

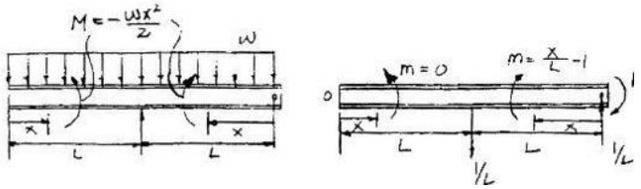

9–57. Solve Prob. 9–56 using Castigliano's theorem.

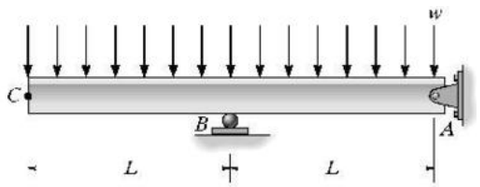

M' does not influence the moment within the overhang.

$$M = \frac{M'}{L}x - M' - \frac{wx^2}{2}$$

$$\frac{\partial M}{\partial M'} = \frac{x}{L} - 1$$

Setting $M' = 0$,

$$\theta_A = \int_0^L M\left(\frac{\partial M}{\partial M'}\right)\frac{dx}{EI} = \frac{1}{EI}\int_0^L \left(\frac{-wx^2}{2}\right)\left(\frac{x}{L}-1\right)dx = \frac{-w}{2EI}\left[\frac{L^3}{4} - \frac{L^3}{3}\right]$$

$$= \frac{wL^3}{24EI}$$ **Ans**

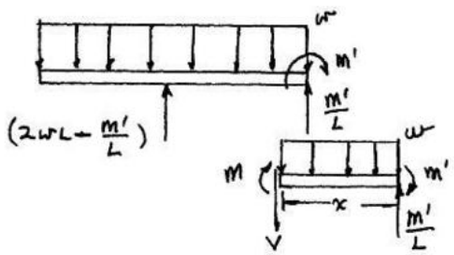

9–58. Use the method of virtual work and determine the horizontal displacement of point A on the angle bracket due to the concentrated force $\mathbf{P}$. The bracket is fixed connected to its support. EI is constant. Consider only the effect of bending.

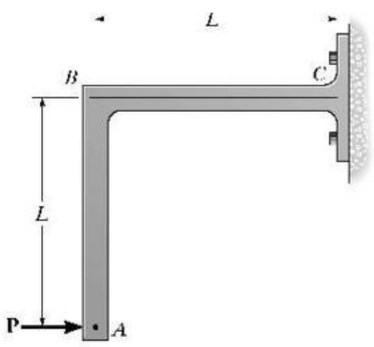

Real Moment Function $M(x)$: As shown on figure(a).

Virtual Moment Functions $m(x)$: As shown on figure(b).

Virtual Work Equation : For the horizontal displacement at point A, apply Eq. 9 – 18.

$$1 \cdot \Delta = \int_0^L \frac{mM}{EI}\,dx$$

$$1 \cdot (\Delta_A)_h = \frac{1}{EI}\int_0^L (1.00x_1)(Px_1)\,dx_1 + \frac{1}{EI}\int_0^L (1.00L)(PL)\,dx_2$$

$$(\Delta_A)_h = \frac{4PL^3}{3EI} \rightarrow$$ **Ans**

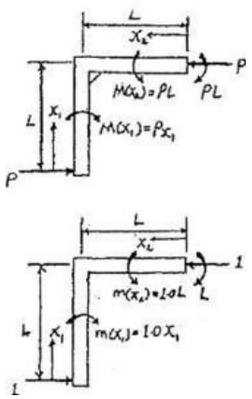

www.e-kitabi.com

© 2009 by R.C. Hibbeler. Published by Pearson Prentice Hall, Pearson Education, Inc., Upper Saddle River, NJ. All rights reserved. This material is protected under all copyright laws as they currently exist. No portion of this material may be reproduced, in any form or by any means, without permission in writing from the publisher.

9–59. Solve Prob. 9–58 using Castigliano's theorem.

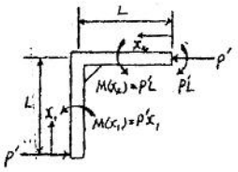

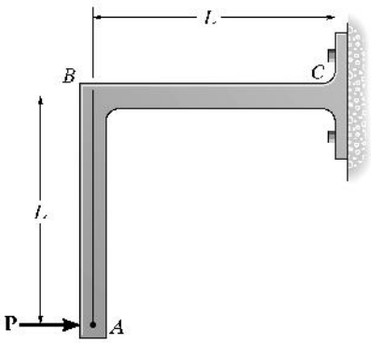

Internal Moment Function M(x): The internal moment function in terms of the load P' and external applied load are shown on the figure.

Castigliano's Second Theorem: The horizontal displacement at A can be determined using Eq. 9–28 with $\frac{\partial M(x_1)}{\partial P'} = 1.00x_1$, $\frac{\partial M(x_2)}{\partial P'} = 1.00L$ and setting $P' = P$.

$$\Delta = \int_0^L M\left(\frac{\partial M}{\partial P}\right)\frac{dx}{EI}$$

$$(\Delta_A)_h = \frac{1}{EI}\int_0^L (Px_1)(1.00x_1)\,dx_1 + \frac{1}{EI}\int_0^L (PL)(1.00L)\,dx_2$$

$$= \frac{4PL^3}{3EI} \rightarrow \qquad \textbf{Ans}$$

***9–60.** Bar ABC has a rectangular cross section of 300 mm by 100 mm. Attached rod DB has a diameter of 20 mm. Determine the vertical displacement of point C due to the loading. Consider only the effect of bending in ABC and axial force in DB. $E = 200$ GPa.

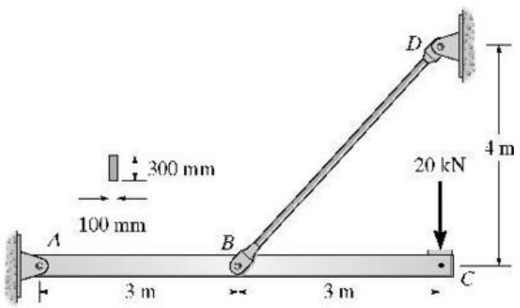

Real Moment Function M(x): As shown on figure(a).

Virtual Moment Functions m(x): As shown on figure(b).

Virtual Work Equation: For the displacement at point C, combine Eq. 9-18 and Eq. 9-15.

$$1\cdot\Delta = \int_0^L \frac{mM}{EI}dx + \frac{nNL}{AE}$$

$$1\text{ kN}\cdot\Delta_C = 2\left[\frac{1}{EI}\int_0^{3\text{m}} (1.00x)(20.0x)\,dx\right] + \frac{2.50(50.0)(5)}{AE}$$

$$\Delta_C = \frac{360\text{ kN}\cdot\text{m}^3}{EI} + \frac{625\text{ kN}\cdot\text{m}}{AE} = \frac{360(1000)}{200(10^9)\left[\frac{1}{12}(0.1)(0.3^3)\right]} + \frac{625(1000)}{\left[\frac{\pi}{4}(0.02^2)\right][200(10^9)]}$$

$$= 0.017947\text{ m} = 17.9\text{ mm} \downarrow \qquad \textbf{Ans}$$

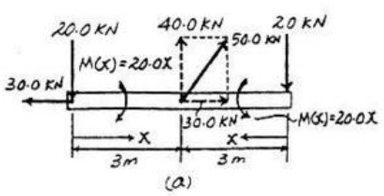

(a)

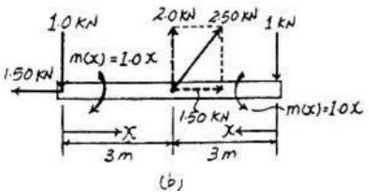

(b)

www.e-kitabi.com

© 2009 by R.C. Hibbeler. Published by Pearson Prentice Hall, Pearson Education, Inc., Upper Saddle River, NJ. All rights reserved. This material is protected under all copyright laws as they currently exist. No portion of this material may be reproduced, in any form or by any means, without permission in writing from the publisher.

9–61. Bar ABC has a rectangular cross section of 300 mm by 100 mm. Attached rod DB has a diameter of 20 mm. Determine the slope at A due to the loading. Consider only the effect of bending in ABC and axial force in DB. $E = 200\,\text{GPa}$.

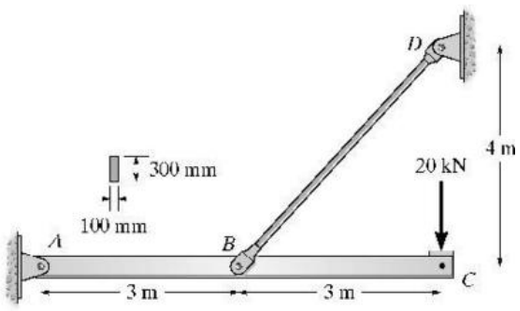

Real Moment Function $M(x)$: As shown on figure(a).

Virtual Moment Functions $m_\theta(x)$: As shown on figure(b).

Virtual Work Equation: For the slope at point A, combine Eq. 9-19 and Eq. 9-15.

$$1\cdot\theta = \int_0^L \frac{m_\theta M}{EI}\,dx + \frac{nNL}{AE}$$

$$1\,\text{kN}\cdot\text{m}\cdot\theta_A = \frac{1}{EI}\int_0^{3\text{m}} (1-0.3333x)(20.0x)\,dx + \frac{(-0.41667)(50.0)(5)}{AE}$$

$$\theta_A = \frac{30.0\,\text{kN}\cdot\text{m}^2}{EI} - \frac{104.167\,\text{kN}}{AE}$$

$$= \frac{30.0(1000)}{200(10^9)\left[\frac{1}{12}(0.1)(0.3^3)\right]} - \frac{104.167(1000)}{\left[\frac{\pi}{4}(0.02^2)\right][200(10^9)]}$$

$$= -0.991\left(10^{-3}\right)\,\text{rad} = 0.991\left(10^{-3}\right)\,\text{rad} \qquad \textbf{Ans}$$

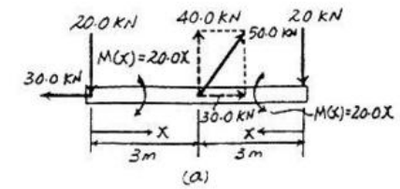

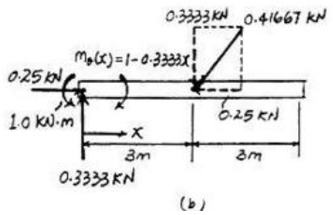

9–62. The bottom of the beam is subjected to a temperature of $T_b = 250°\text{F}$, while the temperature of its top is $T_t = 50°\text{F}$. If $\alpha = 6.5(10^{-6})/°\text{F}$, determine the vertical displacement of its end B due to the temperature gradient. The beam has a rectangular cross section with a depth of 14 in.

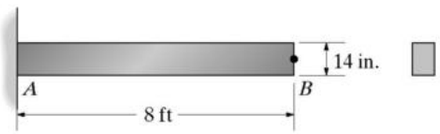

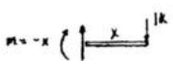

$$\Delta_B = \int_0^L \frac{m\,\alpha T_b - T}{c}\,dx = \int_0^{96} \frac{(-x)(6.5)(10^{-6})(100)}{7}\,dx = -0.428\,\text{in.} = 0.428\,\text{in.}\uparrow \qquad \textbf{Ans}$$

9–63. The top of the beam is subjected to a temperature of $T_t = 200°\text{C}$, while the temperature of its bottom is $T_b = 30°\text{C}$. If $\alpha = 12(10^{-6})/°\text{C}$, determine the vertical displacement of its end C due to the temperature gradient. The beam has a depth of 350 mm.

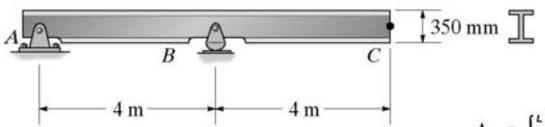

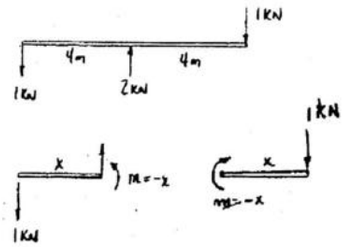

$$\Delta_C = \int_0^L \frac{m\,\alpha\,\Delta T_m}{c}\,dx = 2\int_0^{4000} \frac{(-x)(12)(10^{-6})(-85.0)}{175}\,dx = 93.3\,\text{mm}\downarrow \qquad \textbf{Ans}$$

www.e-kitabi.com

c09.qxd 6/25/08 11:04 AM Page 258

© 2009 by R.C. Hibbeler. Published by Pearson Prentice Hall, Pearson Education, Inc., Upper Saddle River, NJ. All rights reserved. This material is protected under all copyright laws as they currently exist. No portion of this material may be reproduced, in any form or by any means, without permission in writing from the publisher.

***9–64.** Determine the horizontal displacement of point C. EI is constant. There is a fixed support at A. Consider only the effect of bending.

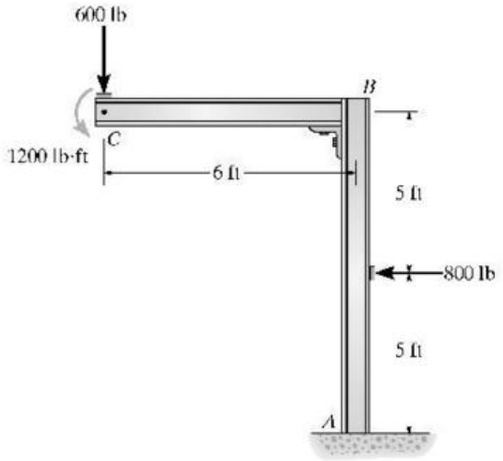

Real Moment Function $M(x)$**:** As shown on figure (a).

Virtual Moment Functions $m(x)$**:** As shown on figure (b).

Virtual Work Equation: For the horizontal displacement at point C, apply Eq. 9–18.

$$1 \cdot \Delta = \int_0^L \frac{mM}{EI}\,dx$$

$$1\ \text{lb} \cdot (\Delta_C)_h = 0 + \frac{1}{EI}\int_0^{5\text{ft}} (1.00x_2)(4800)\,dx_2 + \frac{1}{EI}\int_0^{5\text{ft}} 1.00(x_3+5)(4800+800x_3)\,dx_3$$

$$(\Delta_C)_h = \frac{323(10^3)\ \text{lb}\cdot\text{ft}^3}{EI} \qquad \textbf{Ans}$$

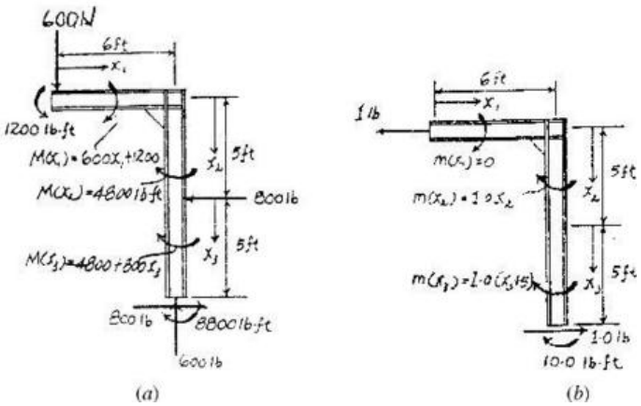

9–65. Use the method of virtual work and determine the horizontal deflection at C. The cross-sectional area of each member is indicated in the figure. Assume the members are pin connected at their end points. $E = 29(10^3)$ ksi.

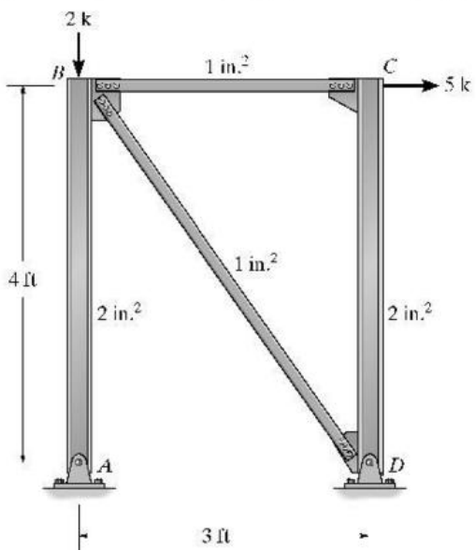

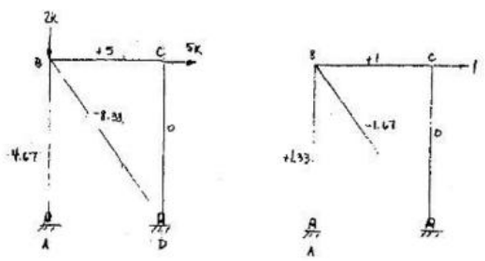

$$(\Delta_C)_h = \sum \frac{nNL}{AE} = \frac{1.33(4.667)(4)(12)}{2(29)(10^3)} + \frac{(1)(5)(3)(12)}{(1)(29)(10^3)} + 0 + \frac{(-8.33)(-1.667)(5)(12)}{(1)(29)(10^3)}$$

$$= 0.0401\ \text{in.} \rightarrow \qquad \textbf{Ans}$$

www.e-kitabi.com

c09.qxd 6/25/08 11:04 AM Page 259

© 2009 by R.C. Hibbeler. Published by Pearson Prentice Hall, Pearson Education, Inc., Upper Saddle River, NJ. All rights reserved. This material is protected under all copyright laws as they currently exist. No portion of this material may be reproduced, in any form or by any means, without permission in writing from the publisher.

9–66. Solve Prob. 9–65 using Castigliano's theorem.

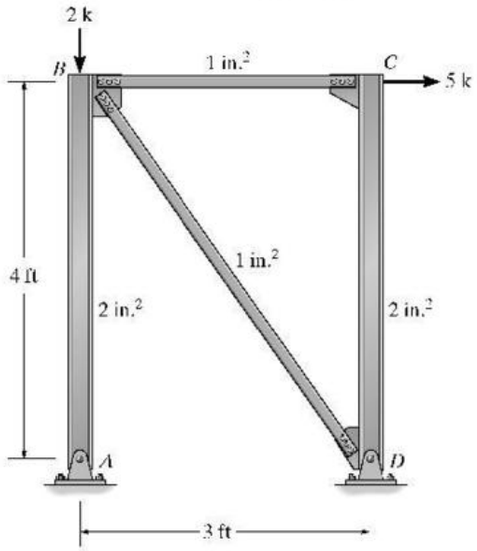

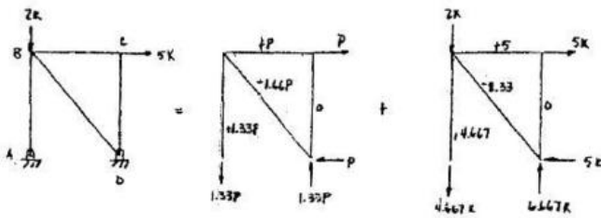

Member	N force	$\frac{\partial N}{\partial P}$
AB	$1.33P + 4.667$	1.33
BC	$P + 5$	1
BD	$-1.667P - 8.33$	-1.667
CD	0	0

Set $P = 0$,

$$(\Delta_C)_A = \sum N\left(\frac{\partial N}{\partial P}\right)\frac{L}{AE} = \frac{(4.667)(1.33)(4)(12)}{2(29)(10^3)} + \frac{(5)(1)(3)(12)}{(1)(29)(10^3)} + 0 + \frac{(-8.33)(-1.667)(5)(12)}{(1)(29)(10^3)}$$

$$= 0.0401 \text{ in.} \rightarrow \quad \text{Ans}$$

9–67. Use the method of virtual work and determine the vertical deflection at the rocker support D. EI is constant.

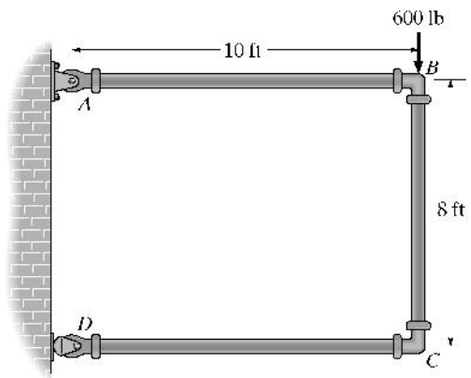

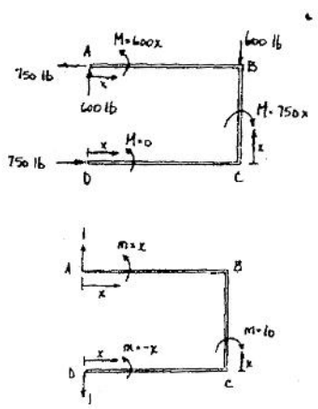

$$(\Delta_D)_v = \int_0^L \frac{mM}{EI}dx = \int_0^{10}\frac{(x)(600x)\,dx}{EI} + \int_0^8 \frac{(10)(750x)\,dx}{EI} + 0$$

$$= \frac{440 \text{ k}\cdot\text{ft}^3}{EI} \downarrow \quad \text{Ans}$$

www.e-kitabi.com

© 2009 by R.C. Hibbeler. Published by Pearson Prentice Hall, Pearson Education, Inc., Upper Saddle River, NJ. All rights reserved. This material is protected under all copyright laws as they currently exist. No portion of this material may be reproduced, in any form or by any means, without permission in writing from the publisher.

***9–68.** Use Castigliano's theorem and determine the vertical deflection at the rocker support D. EI is constant.

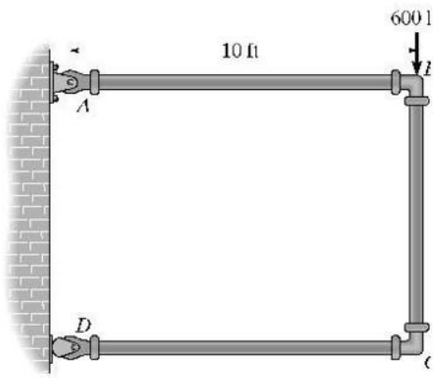

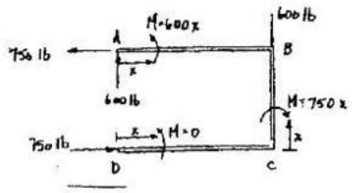

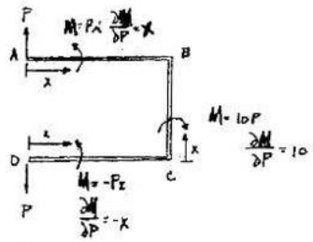

Set $P = 0$,

$$(\Delta_D)_v = \int_0^L \frac{M}{EI}\left(\frac{\partial M}{\partial P}\right)dx = \int_0^{10} \frac{(600x)(x)\,dx}{EI} + \int_0^8 \frac{(750x)(10)\,dx}{EI} + 0$$

$$= \frac{440\ \text{k}\cdot\text{ft}^3}{EI} \downarrow \qquad \textbf{Ans}$$

9–69. The ring rests on the rigid surface and is subjected to the vertical load **P**. Determine the vertical displacement at B. EI is constant.

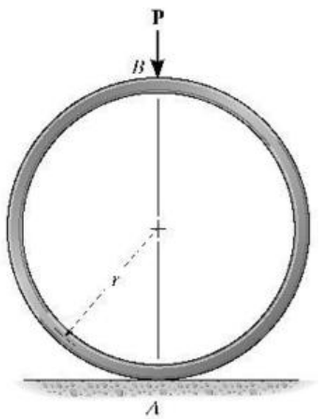

Model: The ring can be modeled as a half ring as shown in figure(a).

Real Moment Function $M(x)$: As shown on figure(a).

Virtual Moment Functions $m(x)$ and $m_\theta(x)$: As shown on figure(b) and (c).

Virtual Work Equation: Due to symmetry, the slope at B remains horizontal, i.e., equal to zero. Applying Eq. 14 – 43, we have

$$1 \cdot \theta = \int_0^L \frac{m_\theta M}{EI} ds \qquad \text{Where } ds = r d\theta$$

$$1 \cdot \theta_B = 0 = \frac{1}{EI}\int_0^\pi 1.00\left(\frac{Pr}{2}\sin\theta - M_0\right) r d\theta$$

$$M_0 = \frac{Pr}{\pi}$$

For the vertical displacement at B, apply Eq. 9-18

$$1 \cdot \Delta = \int_0^L \frac{mM}{EI} ds$$

$$1 \cdot \Delta_B = \frac{1}{EI}\int_0^\pi (r\sin\theta)\left(\frac{Pr}{2}\sin\theta - \frac{Pr}{\pi}\right) r d\theta$$

$$= \frac{Pr^3}{2\pi EI}\int_0^\pi \left(\pi\sin^2\theta - 2\sin\theta\right) d\theta$$

$$= \frac{Pr^3}{4\pi EI}\int_0^\pi [\pi(1-\cos 2\theta) - 4\sin\theta]\, d\theta$$

$$\Delta_B = \frac{Pr^3}{4\pi EI}\left(\pi^2 - 8\right) \qquad \textbf{Ans}$$

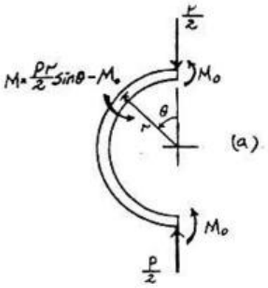

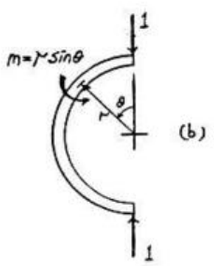

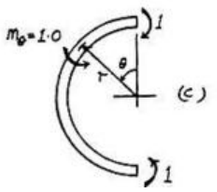

www.e-kitabi.com

c09.qxd 6/25/08 11:04 AM Page 261

© 2009 by R.C. Hibbeler. Published by Pearson Prentice Hall, Pearson Education, Inc., Upper Saddle River, NJ. All rights reserved. This material is protected under all copyright laws as they currently exist. No portion of this material may be reproduced, in any form or by any means, without permission in writing from the publisher.

9–70. The bent rod has an $E = 200$ GPa, $G = 75$ GPa, and a radius of 30 mm. Use the method of virtual work and determine the vertical deflection at C. Include the effects of bending, shear, and torsional strain energy.

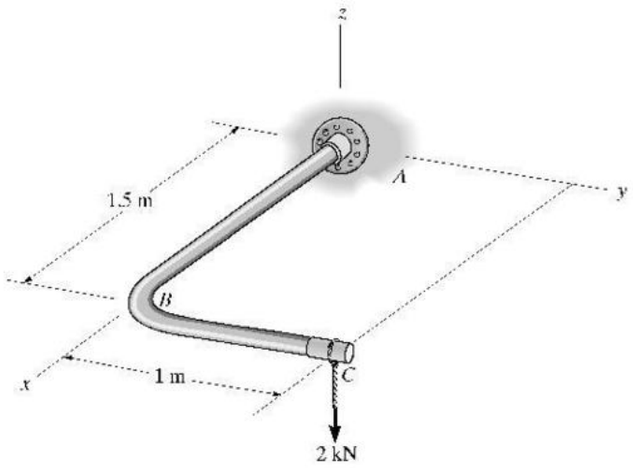

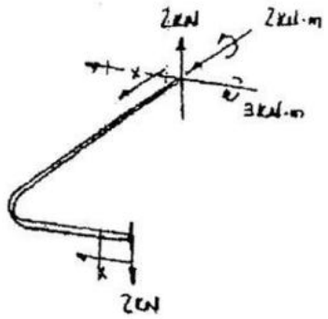

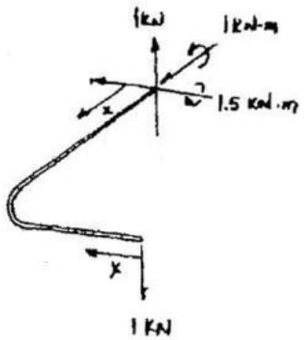

$$(\Delta_C)_v = \int_0^L \frac{mM}{EI}\,dx + \int_0^L K\left(\frac{vV}{GA}\right)dx + \sum \frac{rTL}{GJ}$$

$$= \int_0^1 \frac{(-x)(-2x)}{EI}\,dx + \int_0^{1.5} \frac{(x-1.5)(2x-3)}{EI}\,dx$$

$$+ \int_0^1 \frac{\left(\frac{10}{9}\right)(1)(2)}{GA}dx + \int_0^{1.5} \frac{\left(\frac{10}{9}\right)(1)(2)}{GA}dx + \frac{(-1)(-2)(1.5)}{GJ} + 0$$

$$(\Delta_C)_v = \frac{2.25(10^3)}{200(10^9)\left(\frac{\pi}{4}\right)(0.03)^4} + \frac{5.556(10^3)}{75(10^9)(\pi)(0.03)^2} + \frac{3(10^3)}{75(10^9)\left(\frac{\pi}{2}\right)(0.03)^4}$$

$$= 0.017684 + 0.0000262 + 0.0314380$$

$$(\Delta_C)_v = 0.0491 \text{ m} = 49.1 \text{ mm} \downarrow \quad \textbf{Ans}$$

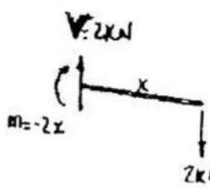

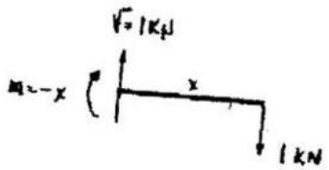

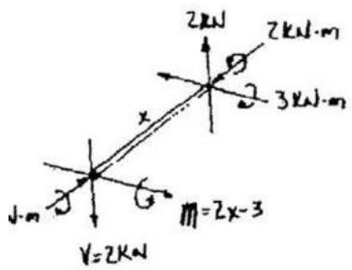

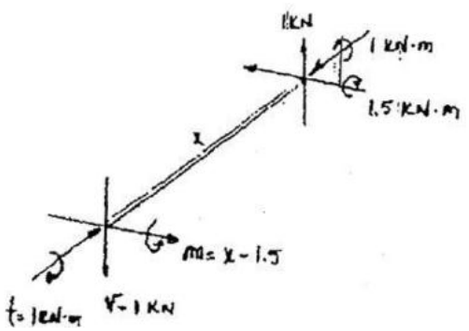

www.e-kitabi.com

c09.qxd 6/25/08 11:04 AM Page 262

© 2009 by R.C. Hibbeler. Published by Pearson Prentice Hall, Pearson Education, Inc., Upper Saddle River, NJ. All rights reserved. This material is protected under all copyright laws as they currently exist. No portion of this material may be reproduced, in any form or by any means, without permission in writing from the publisher.

9–71. Solve Prob. 9–70 using Castigliano's theorem.

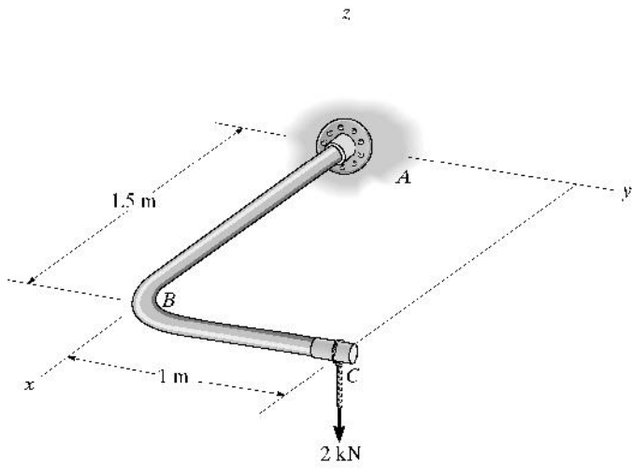

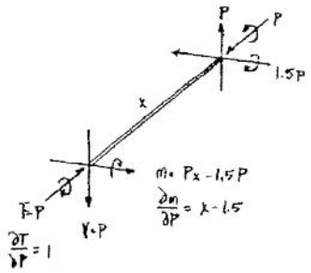

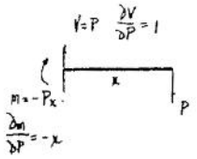

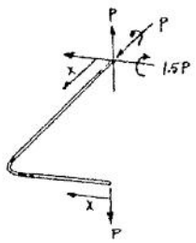

Set $P = 2$ kN,

$$(\Delta_C)_v = \int_0^L \frac{M}{EI}\left(\frac{\partial M}{\partial P}\right) dx + \int_0^L K\left(\frac{V}{GA}\right)\left(\frac{\partial V}{\partial P}\right) dx + \sum \frac{T}{GJ}\left(\frac{\partial T}{\partial P}\right) L$$

$$= \int_0^1 \frac{(-2x)(-x)}{EI}\, dx + \int_0^{1.5} \frac{(2x-3)(x-1.5)}{EI}\, dx$$

$$+ \int_0^1 \frac{\left(\frac{10}{9}\right)(2)(1)}{GA} dx + \int_0^{1.5} \frac{\left(\frac{10}{9}\right)(2)(1)}{GA} dx + \frac{(-2)(-1)(1.5)}{GJ} + 0$$

$$(\Delta_C)_v = \frac{2.25(10^3)}{200(10^9)\left(\frac{\pi}{4}\right)(0.03)^4} + \frac{5.556(10^3)}{75(10^9)(\pi)(0.03)^2} + \frac{3(10^3)}{75(10^9)\left(\frac{\pi}{2}\right)(0.03)^4}$$

$$= 0.017684 + 0.0000262 + 0.0314380$$

$$(\Delta_C)_v = 0.0491 \text{ m} = 49.1 \text{ mm} \downarrow \qquad \textbf{Ans}$$

www.e-kitabi.com

c09.qxd 6/25/08 11:04 AM Page 263

© 2009 by R.C. Hibbeler. Published by Pearson Prentice Hall, Pearson Education, Inc., Upper Saddle River, NJ. All rights reserved. This material is protected under all copyright laws as they currently exist. No portion of this material may be reproduced, in any form or by any means, without permission in writing from the publisher.

***9–72.** The frame is subjected to the load of 5 k. Determine the vertical displacement at C. Assume that the members are pin connected at A, C, and E, and fixed connected at the knee joints B and D. EI is constant. Use the method of virtual work.

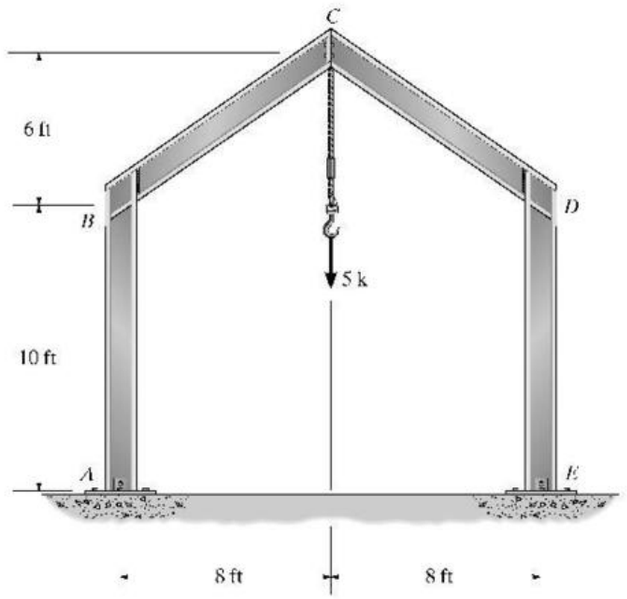

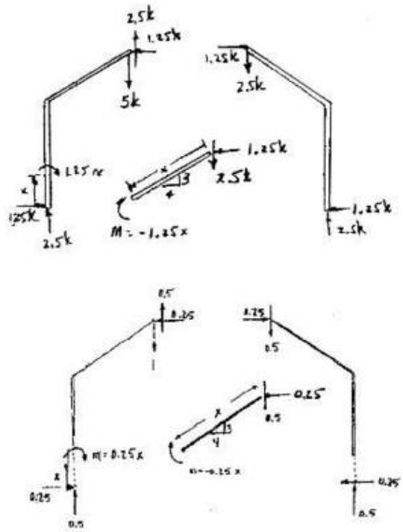

$$(\Delta_C)_v = \int_0^L \frac{mM}{EI}\,dx = 2\left[\int_0^{10} \frac{(0.25x)(1.25x)\,dx}{EI} + \int_0^{10} \frac{(-0.25x)(-1.25x)\,dx}{EI}\right]$$

$$= \frac{1.25(10^3)}{3EI} = \frac{417\ \text{k}\cdot\text{ft}^3}{EI} \downarrow \qquad \textbf{Ans}$$

9–73. Solve Prob. 9–72 using Castigliano's theorem.

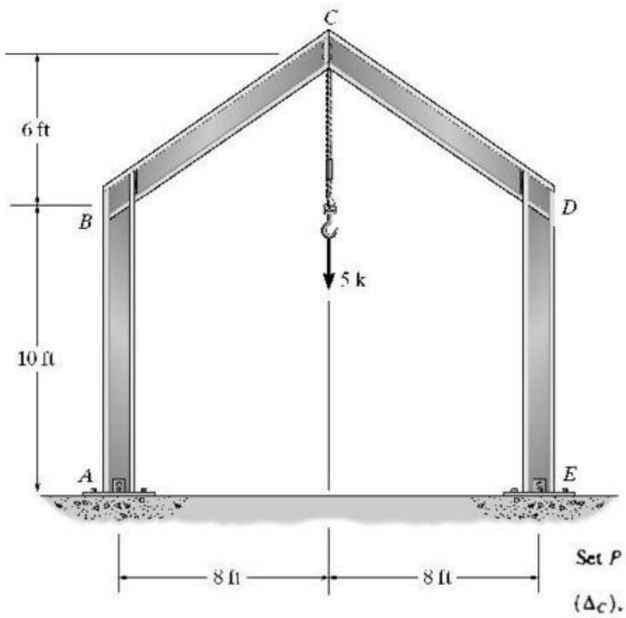

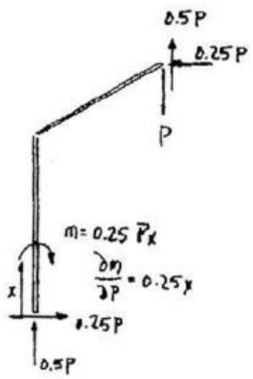

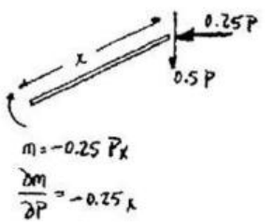

Set $P = 5$ k,

$$(\Delta_C)_v = \int_0^L \frac{M}{EI}\left(\frac{\partial M}{\partial P}\right)dx = 2\left[\int_0^{10} \frac{(1.25x)(0.25x)\,dx}{EI} + \int_0^{10} \frac{(-1.25x)(-0.25x)\,dx}{EI}\right]$$

$$= \frac{1.25(10^3)}{3EI} = \frac{417\ \text{k}\cdot\text{ft}^3}{EI} \downarrow \qquad \textbf{Ans}$$

www.e-kitabi.com

© 2009 by R.C. Hibbeler. Published by Pearson Prentice Hall, Pearson Education, Inc., Upper Saddle River, NJ. All rights reserved. This material is protected under all copyright laws as they currently exist. No portion of this material may be reproduced, in any form or by any means, without permission in writing from the publisher.

9–74. Use the method of virtual work and determine the horizontal deflection at C. EI is constant. There is a pin at A. Assume C is a roller and B is a fixed joint.

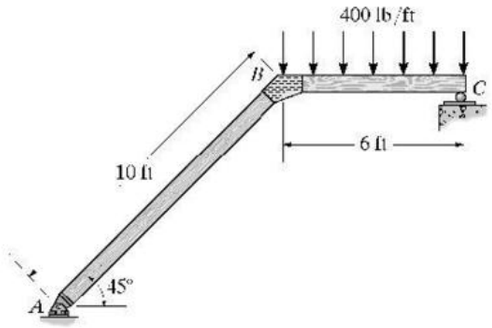

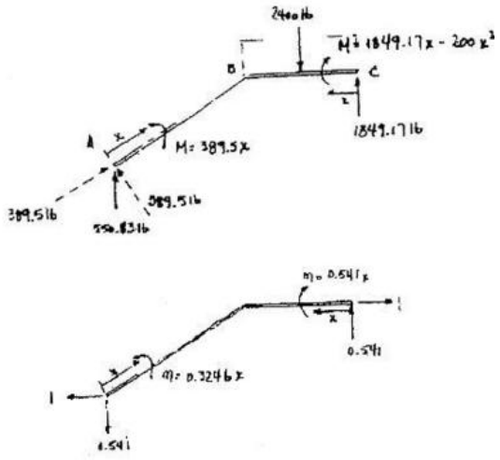

$$(\Delta_C)_h = \int_0^L \frac{mM}{EI}\,dx = \int_0^6 \frac{(0.541x)(1849.17x - 200x^2)\,dx}{EI} + \int_0^{10} \frac{(0.325x)(389.5x)\,dx}{EI}$$

$$= \frac{1}{EI}\left[(333.47x^3 - 27.05x^4)\Big|_0^6 + (42.15x^3)\Big|_0^{10}\right]$$

$$= \frac{79.1\ \text{k}\cdot\text{ft}^3}{EI} \rightarrow \qquad \textbf{Ans}$$

9–75. Solve Prob. 9–74 using Castigliano's theorem.

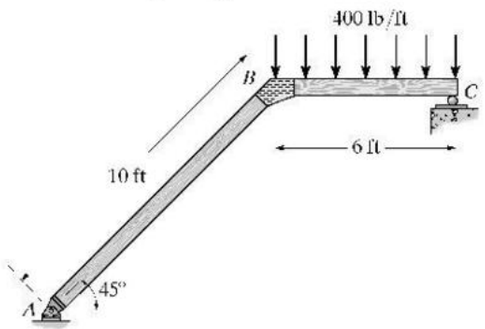

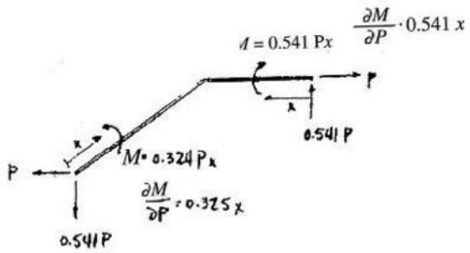

Set $P = 0$,

$$(\Delta_C)_h = \int_0^L \frac{M}{EI}\left(\frac{\partial M}{\partial P}\right)dx = \int_0^6 \frac{(1849.17x - 200x^2)(0.541x)\,dx}{EI} + \int_0^{10} \frac{(389.5x)(0.325x)\,dx}{EI}$$

$$= \frac{1}{EI}\left[(333.47x^3 - 27.05x^4)\Big|_0^6 + (42.15x^3)\Big|_0^{10}\right]$$

$$= \frac{79.1\ \text{k}\cdot\text{ft}^3}{EI} \rightarrow \qquad \textbf{Ans}$$

www.e-kitabi.com

c10.qxd 6/26/08 4:52 PM Page 265

© 2009 by R.C. Hibbeler. Published by Pearson Prentice Hall, Pearson Education, Inc., Upper Saddle River, NJ. All rights reserved. This material is protected under all copyright laws as they currently exist. No portion of this material may be reproduced, in any form or by any means, without permission in writing from the publisher.

10–1. Determine the reactions at the supports and then draw the moment diagram for the beam. Assume the support at A is fixed and B is a roller. EI is constant.

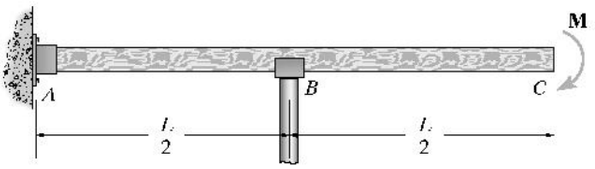

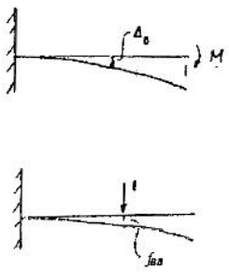

Using table on inside front cover:

$$\Delta_B = \frac{M}{2EI}\left(\frac{L}{2}\right)^2 = \frac{ML^2}{8EI}$$

$$f_{BB} = \frac{1\left(\frac{L}{2}\right)^3}{3EI} = \frac{L^3}{24EI}$$

$$\Delta_B + B_y f_{BB} = 0$$

$$\frac{ML^2}{8EI} + B_y\frac{L^3}{24EI} = 0$$

$$B_y = \frac{3M}{L} \quad \text{Ans}$$

$$\overset{+}{\rightarrow}\Sigma F_x = 0; \quad A_x = 0 \quad \text{Ans}$$

$$+\uparrow \Sigma F_y = 0; \quad -A_y + \frac{3M}{L} = 0; \quad A_y = \frac{3M}{L}$$

$$\left(+\Sigma M_A = 0; \quad \frac{3M}{L}\left(\frac{L}{2}\right) - M - M_A = 0; \quad M_A = 0.5M\right)$$

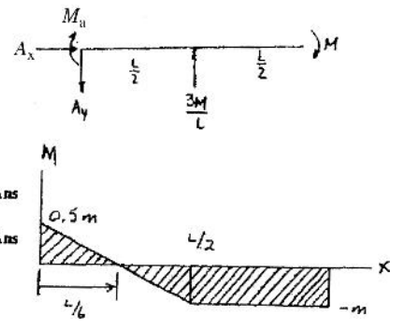

10–2. Determine the reactions at the supports. Assume the support at A is fixed and B is a roller. Take $E = 29(10^3)$ ksi. The moment of inertia for each segment is shown in the figure.

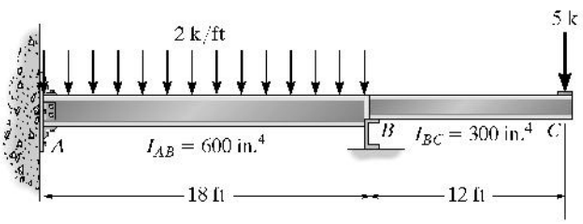

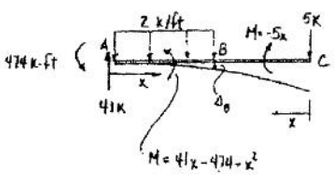

$$\Delta_B = \int_0^L \frac{mM}{EI}\,dx = \int_0^{18}\frac{(x-18)(41x-474-x^2)}{EI_{AB}}dx + 0 = \frac{45{,}684}{EI_{AB}}$$

$$f_{BB} = \int_0^L \frac{m^2}{EI}\,dx = \int_0^{18}\frac{(18-x)^2}{EI_{AB}}dx + 0 = \frac{1944}{EI_{AB}}$$

$$\Delta_B + B_y f_{BB} = 0$$

$$\frac{45{,}684}{EI_{AB}} + B_y\frac{1944}{EI_{AB}} = 0$$

$$B_y = -23.5\ \text{k} \quad \text{Ans}$$

$$\overset{+}{\rightarrow}\Sigma F_x = 0; \quad A_x = 0 \quad \text{Ans}$$

$$+\uparrow \Sigma F_y = 0; \quad A_y = 36 - 23.5 + 5 = 17.5\ \text{k} \quad \text{Ans}$$

$$\left(+\Sigma M_A = 0; \quad -M_A + 36(9) - 23.5(18) + 5(30) = 0\right)$$

$$M_A = 51\ \text{k}\cdot\text{ft} \quad \text{Ans}$$

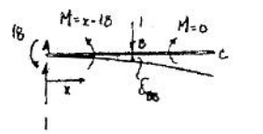

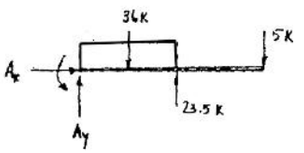

www.e-kitabi.com

c10.qxd 6/26/08 4:52 PM Page 266

© 2009 by R.C. Hibbeler. Published by Pearson Prentice Hall, Pearson Education, Inc., Upper Saddle River, NJ. All rights reserved. This material is protected under all copyright laws as they currently exist. No portion of this material may be reproduced, in any form or by any means, without permission in writing from the publisher.

10–3. Determine the reactions at the supports A, B, and C, then draw the shear and moment diagrams. EI is constant.

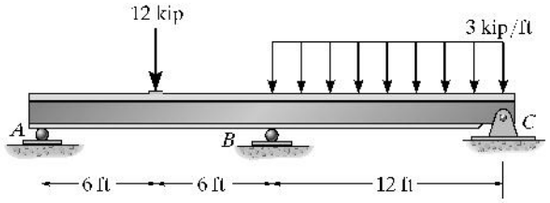

Support Reactions: FBD(a).

$$\overset{+}{\rightarrow}\Sigma F_x = 0; \qquad C_x = 0 \qquad \textbf{Ans}$$

$$+\uparrow \Sigma F_y = 0; \qquad A_y + B_y + C_y - 12 - 36.0 = 0 \qquad [1]$$

$$\circlearrowleft + \Sigma M_A = 0; \qquad B_y(12) + C_y(24) - 12(6) - 36.0(18) = 0 \qquad [2]$$

Method of Superposition: Using the table in Appendix C, the required displacements are

$$v_B' = \frac{5wL^4}{768EI} = \frac{5(3)(24^4)}{768EI} = \frac{6480\ \text{kip}\cdot\text{ft}^3}{EI} \downarrow$$

$$v_B'' = \frac{Pbx}{6EIL}\left(L^2 - b^2 - x^2\right)$$

$$= \frac{12(6)(12)}{6EI(24)}\left(24^2 - 6^2 - 12^2\right) = \frac{2376\ \text{kip}\cdot\text{ft}^3}{EI} \downarrow$$

$$v_B''' = \frac{PL^3}{48EI} = \frac{B_y(24^3)}{48EI} = \frac{288B_y\ \text{ft}^3}{EI} \uparrow$$

The compatibility condition requires

$$(+\downarrow) \qquad 0 = v_B' + v_B'' + v_B'''$$

$$0 = \frac{6480}{EI} + \frac{2376}{EI} + \left(-\frac{288B_y}{EI}\right)$$

$$B_y = 30.75\ \text{kip} \qquad \textbf{Ans}$$

Substituting B_y into Eqs. [1] and [2] yields,

$$A_y = 2.625\ \text{kip} \qquad C_y = 14.625\ \text{kip} \qquad \textbf{Ans}$$

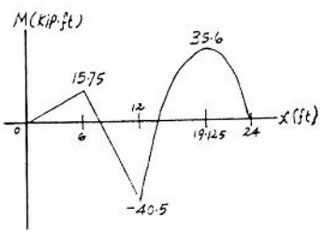

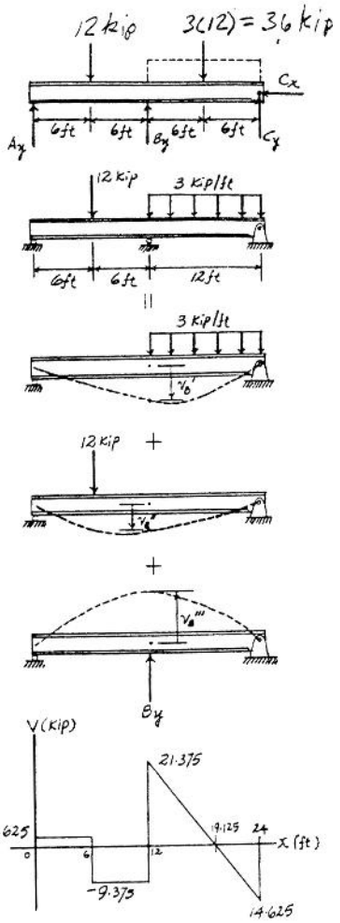

www.e-kitabi.com

c10.qxd 6/26/08 4:52 PM Page 267

© 2009 by R.C. Hibbeler. Published by Pearson Prentice Hall, Pearson Education, Inc., Upper Saddle River, NJ. All rights reserved. This material is protected under all copyright laws as they currently exist. No portion of this material may be reproduced, in any form or by any means, without permission in writing from the publisher.

***10–4.** Determine the reactions at A and B. Assume the support at A only exerts a moment on the beam. EI is constant.

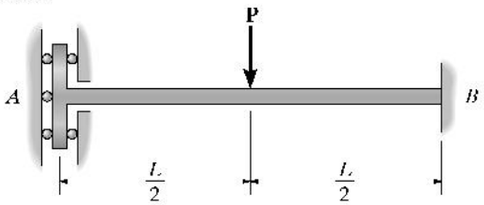

$$(\theta_A)_1 = \frac{PL^2}{8EI}; \quad (\theta_A)_2 = \frac{M_A L}{EI}$$

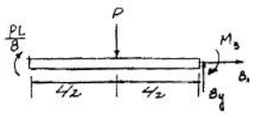

By superposition :

$$0 = (\theta_A)_1 - (\theta_A)_2$$

$$0 = \frac{PL^2}{8EI} - \frac{M_A L}{EI}$$

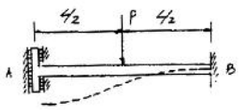

$$M_A = \frac{PL}{8} \qquad \textbf{Ans}$$

Equilibrium :

$$\zeta + \Sigma M_B = 0; \quad -\frac{PL}{8} + \frac{PL}{2} - M_B = 0$$

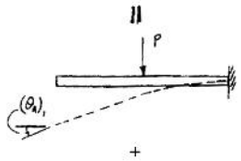

$$M_B = \frac{3PL}{8} \qquad \textbf{Ans}$$

$$\overset{+}{\rightarrow} \Sigma F_x = 0; \quad B_x = 0 \qquad \textbf{Ans}$$

$$+\uparrow \Sigma F_y = 0; \quad B_y = P \qquad \textbf{Ans}$$

10–5. Determine the reactions at the supports A and B. EI is constant.

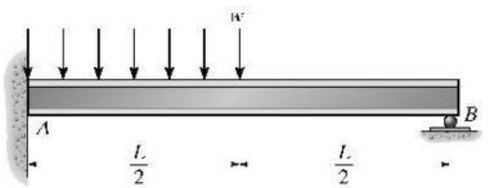

Support Reactions: FBD(a).

$$\overset{+}{\rightarrow} \Sigma F_x = 0; \quad A_x = 0 \qquad \textbf{Ans}$$

$$+\uparrow \Sigma F_y = 0; \quad A_y + B_y - \frac{wL}{2} = 0 \qquad [1]$$

$$\zeta + \Sigma M_A = 0; \quad B_y(L) + M_A - \left(\frac{wL}{2}\right)\left(\frac{L}{4}\right) = 0 \qquad [2]$$

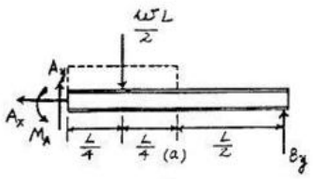

Method of Superposition: Using the table in appendix C, the required displacements are

$$\upsilon_B' = \frac{7wL^4}{384EI} \downarrow \qquad \upsilon_B'' = \frac{PL^3}{3EI} = \frac{B_y L^3}{3EI} \uparrow$$

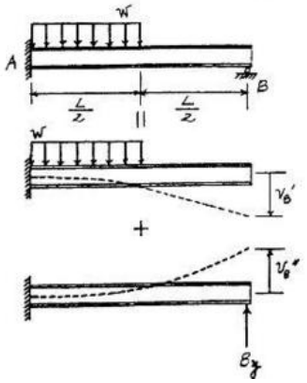

The compatibility condition requires

$$(+\downarrow) \qquad 0 = \upsilon_B' + \upsilon_B''$$

$$0 = \frac{7wL^4}{384EI} + \left(-\frac{B_y L^3}{3EI}\right)$$

$$B_y = \frac{7wL}{128} \qquad \textbf{Ans}$$

Substituting B_y into Eqs. [1] and [2] yields,

$$A_y = \frac{57wL}{128} \qquad M_A = \frac{9wL^2}{128} \qquad \textbf{Ans}$$

www.e-kitabi.com

c10.qxd 6/26/08 4:52 PM Page 268

© 2009 by R.C. Hibbeler. Published by Pearson Prentice Hall, Pearson Education, Inc., Upper Saddle River, NJ. All rights reserved. This material is protected under all copyright laws as they currently exist. No portion of this material may be reproduced, in any form or by any means, without permission in writing from the publisher.

10–6. Determine the reactions at the supports, then draw the shear and moment diagrams. EI is constant.

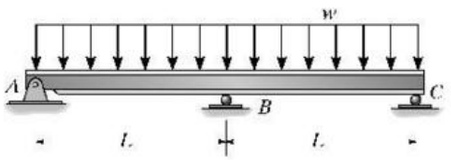

Support Reactions: FBD(a).

$$\overset{+}{\rightarrow}\Sigma F_x = 0; \qquad A_x = 0 \qquad \textbf{Ans}$$

$$+\uparrow \Sigma F_y = 0; \qquad A_y + B_y + C_y - 2wL = 0 \qquad [1]$$

$$\left(+\Sigma M_A = 0; \qquad B_y(L) + C_y(2L) - (2wL)(L) = 0 \qquad [2]\right.$$

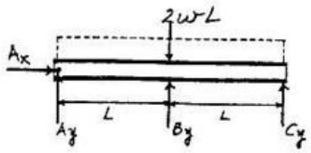

Method of Superposition: Using the table in Appendix C, the required displacements are

$$v_B' = \frac{5wL_{AC}^4}{384EI} = \frac{5w(2L)^4}{384EI} = \frac{5wL^4}{24EI} \downarrow$$

$$v_B'' = \frac{PL_{AC}^3}{48EI} = \frac{B_y(2L)^3}{48EI} = \frac{B_yL^3}{6EI} \uparrow$$

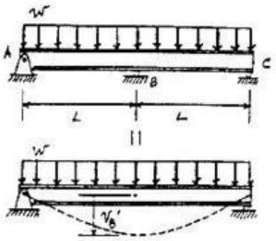

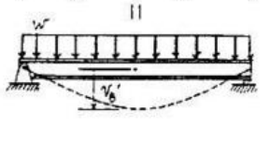

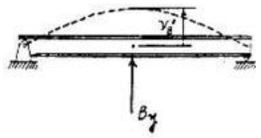

The compatibility condition requires

$$(+\downarrow) \qquad 0 = v_B' + v_B''$$

$$0 = \frac{5wL^4}{24EI} + \left(-\frac{B_yL^3}{6EI}\right)$$

$$B_y = \frac{5wL}{4} \qquad \textbf{Ans}$$

Substituting the value of B_y into Eqs. [1] and [2] yields,

$$C_y = A_y = \frac{3wL}{8} \qquad \textbf{Ans}$$

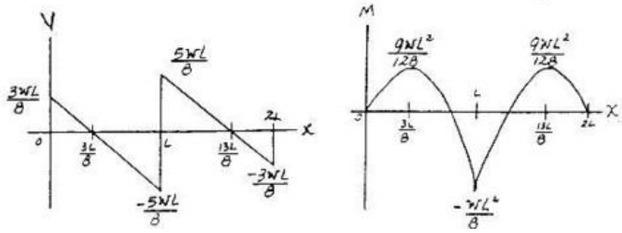

10–7. The beam is supported by a pin at A, a spring having a stiffness k at B, and a roller at C. Determine the force the spring exerts on the beam. EI is constant.

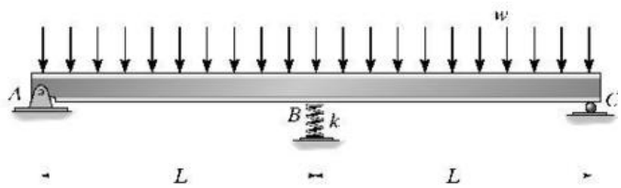

Method of Superposition: Using the table in appendix C, the required displacements are

$$v_B' = \frac{5wL_{AC}^4}{384EI} = \frac{5w(2L)^4}{384EI} = \frac{5wL^4}{24EI} \downarrow$$

$$v_B'' = \frac{PL_{AC}^3}{48EI} = \frac{F_{sp}(2L)^3}{48EI} = \frac{F_{sp}L^3}{6EI} \uparrow$$

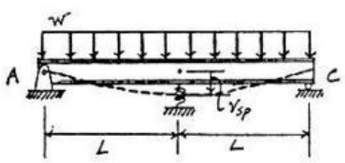

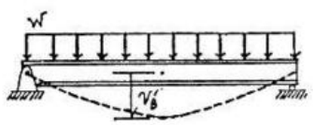

Using the spring formula, $v_{sp} = \frac{F_{sp}}{k}$.

The compatibility condition requires

$$(+\downarrow) \qquad v_{sp} = v_B' + v_B''$$

$$\frac{F_{sp}}{k} = \frac{5wL^4}{24EI} + \left(-\frac{F_{sp}L^3}{6EI}\right)$$

$$F_{sp} = \frac{5wkL^4}{4(6EI + kL^3)} \qquad \textbf{Ans}$$

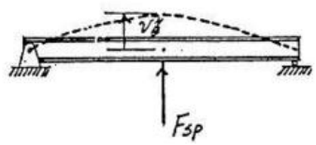

www.e-kitabi.com

c10.qxd 6/26/08 4:52 PM Page 269

© 2009 by R.C. Hibbeler. Published by Pearson Prentice Hall, Pearson Education, Inc., Upper Saddle River, NJ. All rights reserved. This material is protected under all copyright laws as they currently exist. No portion of this material may be reproduced, in any form or by any means, without permission in writing from the publisher.

***10–8.** Determine the support reactions. Assume B is a pin and A and C are rollers. EI is constant.

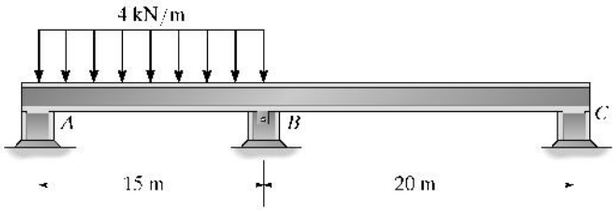

$$\Delta_B = \int_0^L \frac{mM}{EI}\,dx = \int_0^{15} \frac{(\frac{4}{7}x)(\frac{330}{7}x - 2x^2)}{EI}dx + \int_0^{20} \frac{(\frac{3}{7}x)(\frac{90}{7})x}{EI}dx$$

$$= \frac{30{,}535.714}{EI}$$

$$f_{BB} = \int_0^L \frac{m^2}{EI}\,dx = \int_0^{15} \frac{(\frac{4}{7}x)^2}{EI}dx + \int_0^{20} \frac{(\frac{3}{7}x)^2}{EI}dx$$

$$= \frac{857.143}{EI}$$

$$\Delta_B + B_y f_{BB} = 0$$

$$\frac{30{,}535.714}{EI} + B_y\left(\frac{857.143}{EI}\right) = 0$$

$$B_y = -35.625\ \text{kN} = -35.6\ \text{kN} \quad \textbf{Ans}$$

$$\circlearrowleft + \Sigma M_A = 0; \quad 60(7.5) - 35.625(15) + C_y(35) = 0$$

$$C_y = 2.41\ \text{kN} \quad \textbf{Ans}$$

$$+\uparrow \Sigma F_y = 0; \quad A_y - 60 + 35.625 - 2.41 = 0$$

$$A_y = 26.8\ \text{kN} \quad \textbf{Ans}$$

$$B_x = 0 \quad \textbf{Ans}$$

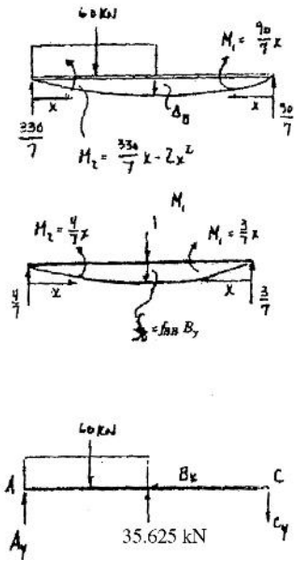

10–9. Determine the reactions at the supports and then draw the bending-moment diagram. Assume A is a pin and B and C are rollers. EI is constant.

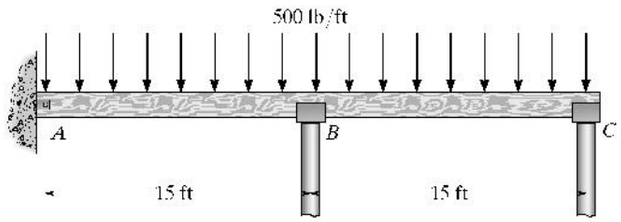

$$\Delta_B = \int_0^L \frac{mM}{EI}\,dx = 2\int_0^{15} \frac{(\frac{1}{2}x)(7500x - 250x^2)}{EI}dx = \frac{5{,}273{,}437.5}{EI}$$

$$f_{BB} = \int_0^L \frac{m^2}{EI}\,dx = 2\int_0^{15} \frac{(\frac{1}{2}x)^2 dx}{EI} = \frac{562.5}{EI}$$

$$\Delta_B + B_y f_{BB} = 0$$

$$\frac{5{,}273{,}437.5}{EI} + B_y\left(\frac{562.5}{EI}\right) = 0$$

$$B_y = -9375\ \text{lb} = -9.38\ \text{k} \quad \textbf{Ans}$$

$$\circlearrowleft + \Sigma M_A = 0; \quad C_y(30) - (15 - 9.375)(15) = 0$$

$$C_y = 2.8125 = 2.81\ \text{k} \quad \textbf{Ans}$$

$$\rightarrow \Sigma F_x = 0; \quad A_x = 0 \quad \textbf{Ans}$$

$$+\uparrow \Sigma F_y = 0; \quad A_y - (15 - 9.375) + 2.8125 = 0$$

$$A_y = 2.8125 = 2.81\ \text{k} \quad \textbf{Ans}$$

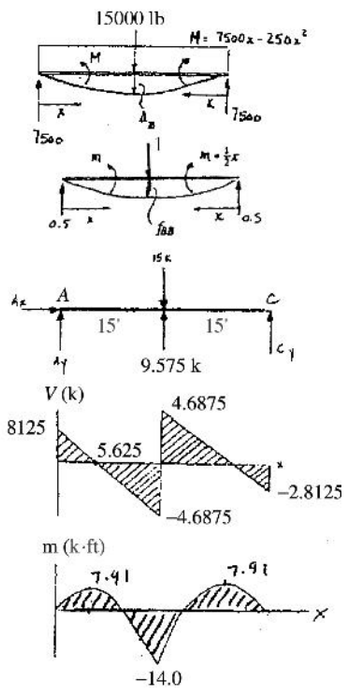

www.e-kitabi.com

c10.qxd 6/26/08 4:52 PM Page 270

© 2009 by R.C. Hibbeler. Published by Pearson Prentice Hall, Pearson Education, Inc., Upper Saddle River, NJ. All rights reserved. This material is protected under all copyright laws as they currently exist. No portion of this material may be reproduced, in any form or by any means, without permission in writing from the publisher.

10–10. Determine the reactions at the supports. Assume A is a pin and B and C are rollers. EI is constant.

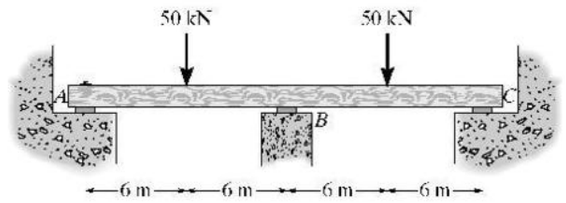

$$\Delta_B = M_{B'} = \frac{1800}{EI}(3) + \frac{900}{EI}(8) - \frac{2700}{EI}(12)$$
$$= -\frac{19,800}{EI}$$
$$f_{BB} = m_{B'} = \frac{36}{EI}(4) - \frac{36}{EI}(12) = -\frac{288}{EI}$$
$$+\downarrow \Delta_B + B_y f_{BB} = 0$$

$$\frac{19,800}{EI} + B_y\left(\frac{288}{EI}\right) = 0$$

$$B_y = -68.8\ \text{kN} \qquad \textbf{Ans}$$

$$\zeta + \Sigma M_A = 0; \quad 68.8(12) + C_y(24) - 50(6) - 50(18) = 0$$
$$C_y = 15.6\ \text{kN} \qquad \textbf{Ans}$$

$$\rightarrow \Sigma F_x = 0; \quad A_x = 0 \qquad \textbf{Ans}$$

$$+\uparrow \Sigma F_y = 0; \quad A_y + 68.8 - 100 + 15.6 = 0$$
$$A_y = 15.6\ \text{kN} \qquad \textbf{Ans}$$

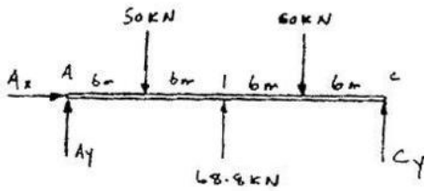

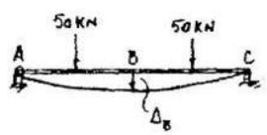

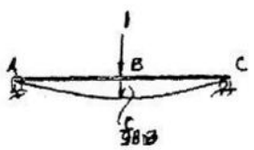

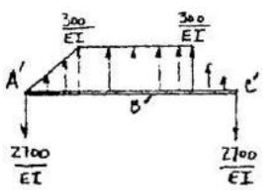

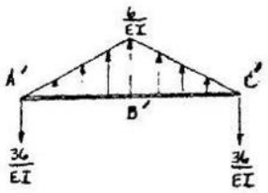

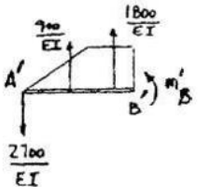

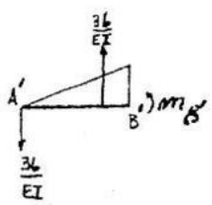

www.e-kitabi.com

c10.qxd 6/26/08 4:53 PM Page 271

© 2009 by R.C. Hibbeler. Published by Pearson Prentice Hall, Pearson Education, Inc., Upper Saddle River, NJ. All rights reserved. This material is protected under all copyright laws as they currently exist. No portion of this material may be reproduced, in any form or by any means, without permission in writing from the publisher.

10–11. Determine the reactions at the supports. Assume A is a pin and B and C are rollers. EI is constant.

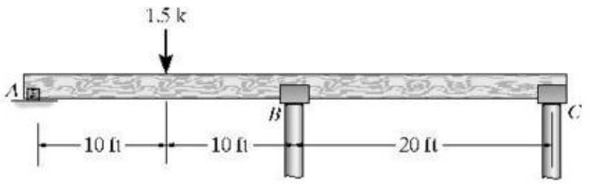

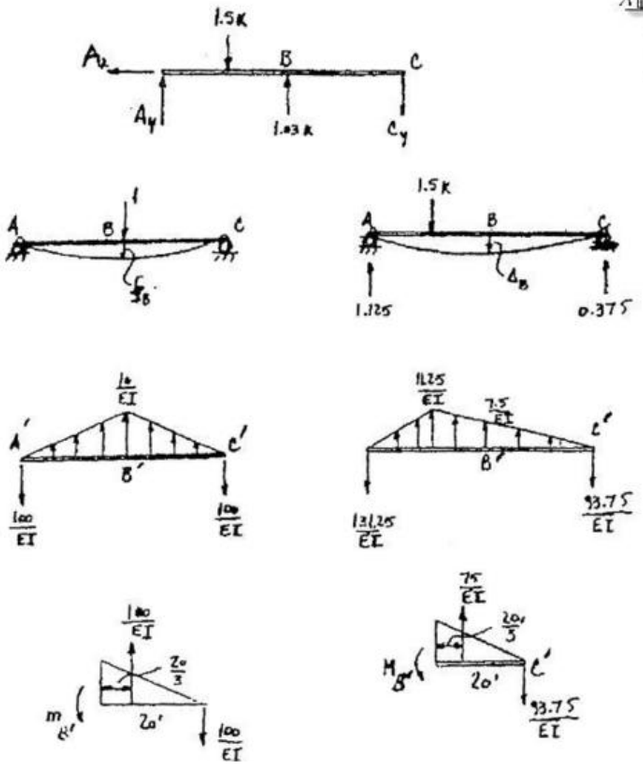

$$\Delta_B = M_B = \frac{93.75}{EI}(20) - \frac{75}{EI}\left(\frac{20}{3}\right) = \frac{1375}{EI}$$

$$f_{BB} = M' = \frac{100}{EI}(20) - \frac{100}{EI}\left(\frac{20}{3}\right) = \frac{1333.33}{EI}$$

$$\Delta_B + B_y f_{BB} = 0$$

$$\frac{1375}{EI} + B_y\left(\frac{1333.33}{EI}\right) = 0$$

$$B_y = -1.03 \text{ k} \quad \text{Ans}$$

$$(+\Sigma M_C = 0; \quad 1.5(30) - 1.03125(20) - A_y(40) = 0$$

$$A_y = 0.609 \text{ k} \quad \text{Ans}$$

$$+\uparrow \Sigma F_y = 0; \quad 0.609 - 1.5 + 1.03125 - C_y = 0$$

$$C_y = 0.141 \text{ k} \quad \text{Ans}$$

$$\rightarrow \Sigma F_x = 0; \quad A_x = 0 \quad \text{Ans}$$

***10–12.** Determine the deflection at the end B of the clamped steel strip. The spring has a stiffness of $k = 2$ N/mm. The strip is 5 mm wide and 10 mm high. Also, draw the shear and moment diagrams for the strip. Take $E = 200$ GPa.

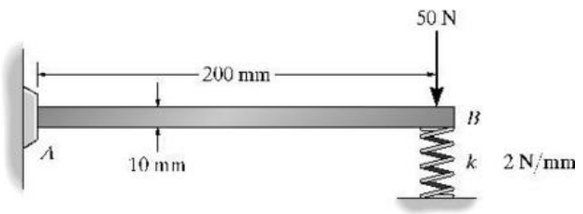

$$I = \frac{1}{12}(0.005)(0.01)^3 = 0.4166\,(10^{-9})\text{ m}^4$$

$$(\Delta_B)_1 = \frac{PL^3}{3EI} = \frac{50(0.2^3)}{3(200)(10^9)(0.4166)(10^{-9})} = 0.0016\text{ m}$$

$$(\Delta_B)_2 = \frac{PL^3}{3EI} = \frac{2000\Delta_B(0.2^3)}{3(200)(10^9)(0.4166)(10^{-9})} = 0.064\,\Delta_B$$

Compatibility condition:

$$+\downarrow \quad \Delta_B = (\Delta_B)_1 - (\Delta_B)_2$$

$$\Delta_B = 0.0016 - 0.064\Delta_B$$

$$\Delta_B = 0.001503\text{ m} = 1.50\text{ mm} \quad \text{Ans}$$

$$B_y = k\Delta_B = 2(1.5) = 3.00\text{ N}$$

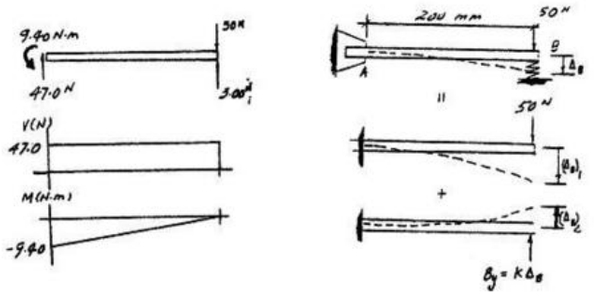

www.e-kitabi.com

c10.qxd 6/26/08 4:53 PM Page 272

© 2009 by R.C. Hibbeler. Published by Pearson Prentice Hall, Pearson Education, Inc., Upper Saddle River, NJ. All rights reserved. This material is protected under all copyright laws as they currently exist. No portion of this material may be reproduced, in any form or by any means, without permission in writing from the publisher.

10–13. Determine the reactions at the supports, then draw the moment diagram. The moment of inertia for each segment is shown in the figure. Assume A and C are rollers and B is a pin. Take $E = 200$ GPa.

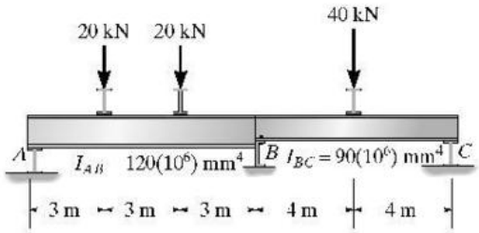

Compatibility Equation :

$$(+\downarrow) \qquad \Delta_B - B_y f_{BB} = 0 \qquad (1)$$

Use conjugate beam method :

$$\left(+\Sigma M_B' = 0;\right) \qquad -M_B' + \frac{891.0}{EI_{AB}}(1.990) + \frac{439.2}{EI_{AB}}(5.333) - \frac{1310.7}{EI_{AB}}(8) = 0$$

$$\Delta_B = M_B' = -\frac{6369.6}{EI_{AB}}$$

$$\left(+\Sigma M_B'' = 0;\right) \qquad -M_B' - \frac{22.588}{EI_{AB}}(2.667) + \frac{22.228}{EI_{AB}}(8) = 0$$

$$f_{BB} = M_B' = \frac{117.59}{EI_{AB}}$$

From Eq. 1

$$\frac{6369.6}{EI_{AB}} - \frac{117.59}{EI_{AB}} B_y = 0$$

$B_y = 54.2$ kN **Ans**

$B_x = 0$ **Ans**

$C_y = 12.5$ kN **Ans**

$A_y = 13.3$ kN **Ans**

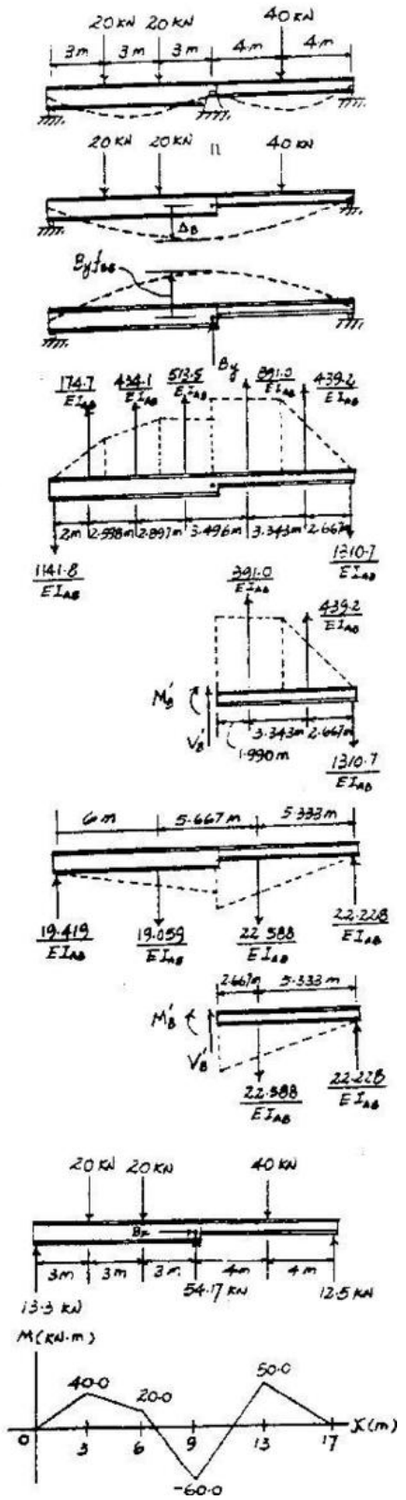

www.e-kitabi.com

c10.qxd 6/26/08 4:53 PM Page 273

© 2009 by R.C. Hibbeler. Published by Pearson Prentice Hall, Pearson Education, Inc., Upper Saddle River, NJ. All rights reserved. This material is protected under all copyright laws as they currently exist. No portion of this material may be reproduced, in any form or by any means, without permission in writing from the publisher.

10–14. Determine the reactions on the beam. The wall at A moves upward 30 mm. Assume the support at A is a pin and B and C are rollers. Take $E = 200$ GPa, $I = 90(10^6)$ mm^4.

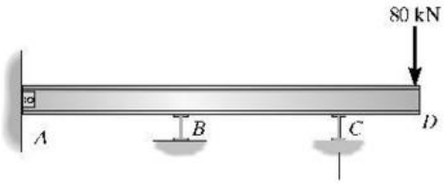

Compatibility Equation :

$$(+\uparrow) \qquad 0.03 = A_y f_{AA} - \Delta_A \qquad (1)$$

Use conjugate beam method :

$$\zeta + \Sigma M_{A'} = 0; \qquad -M_A' - \frac{666.67}{EI}(10) = 0$$

$$\Delta_A = M_A' = -\frac{6666.67}{EI}$$

$$\zeta + \Sigma M_{A'} = 0; \qquad -M_A' + \frac{50}{EI}(6.667) + \frac{33.33}{EI}(10) = 0$$

$$f_{AA} = M_A' = \frac{666.67}{EI}$$

From (1)
$$0.03 = A_y \frac{666.67(10^3)}{200(10^9)(90)(10^{-6})} - \frac{6666.67(10^3)}{200(10^9)(90)(10^{-6})}$$

$$A_y = 10.81 \text{ kN} = 10.8 \text{ kN} \qquad \textbf{Ans}$$

$$B_y = 61.6 \text{ kN} \qquad \textbf{Ans}$$

$$C_y = 131 \text{ kN} \qquad \textbf{Ans}$$

$$A_x = 0 \qquad \textbf{Ans}$$

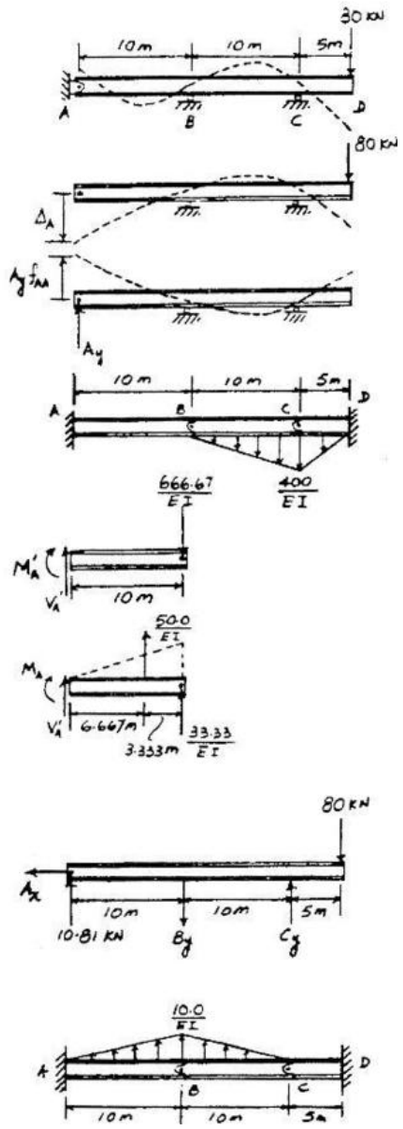

www.e-kitabi.com

c10.qxd 6/26/08 4:53 PM Page 274

© 2009 by R.C. Hibbeler. Published by Pearson Prentice Hall, Pearson Education, Inc., Upper Saddle River, NJ. All rights reserved. This material is protected under all copyright laws as they currently exist. No portion of this material may be reproduced, in any form or by any means, without permission in writing from the publisher.

10–15. Determine the reactions at the supports, then draw the moment diagram. Assume the support at A is a pin and B and C are rollers. EI is constant.

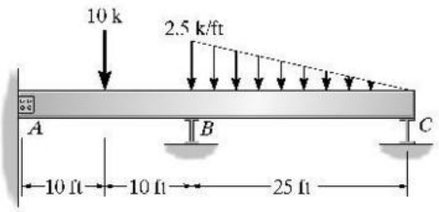

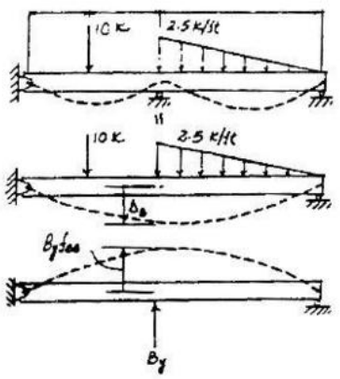

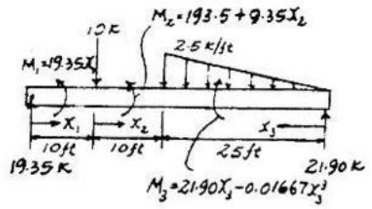

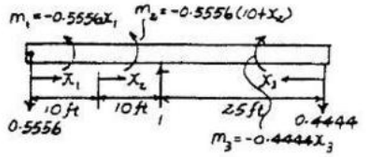

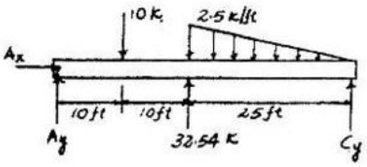

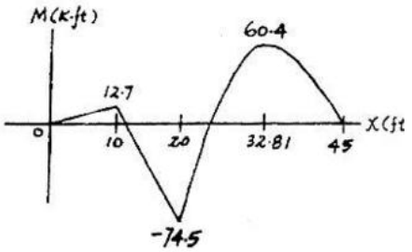

Compatibility Equation:

$$(+\downarrow) \qquad \Delta_B - B_y f_{BB} = 0 \qquad (1)$$

Use virtual work method:

$$\Delta_B = \int_0^L \frac{mM}{EI}\,dx = \int_0^{10} \frac{(-0.5556x_1)(19.35x_1)}{EI}\,dx_1 + \int_0^{10} \frac{(-5.556 - 0.5556x_2)(193.5 + 9.35x_2)}{EI}\,dx_2 + \int_0^{25} \frac{(-0.4444x_3)(21.9x_3 - 0.01667x_3^3)}{EI}\,dx_3$$

$$= -\frac{60\,263.53}{EI}$$

$$f_{BB} = \int_0^{10} \frac{(-0.5556x_1)^2}{EI}\,dx_1 + \int_0^{25} \frac{(-0.4444x_3)^2}{EI}\,dx_3 + \int_0^{10} \frac{(-5.556 - 0.5556x_2)^2}{EI}\,dx_2$$

$$= \frac{1851.85}{EI}$$

From Eq. 1 $$\frac{60\,262.53}{EI} - B_y \frac{1851.85}{EI} = 0$$

$B_y = 32.5$ k **Ans**
$A_x = 0$ **Ans**
$A_y = 1.27$ k **Ans**
$C_y = 7.44$ k **Ans**

www.e-kitabi.com

c10.qxd 6/26/08 4:53 PM Page 275

© 2009 by R.C. Hibbeler. Published by Pearson Prentice Hall, Pearson Education, Inc., Upper Saddle River, NJ. All rights reserved. This material is protected under all copyright laws as they currently exist. No portion of this material may be reproduced, in any form or by any means, without permission in writing from the publisher.

***10–16.** Draw the moment diagram for the beam. EI is constant. Assume the support at A is fixed and B and C are rollers.

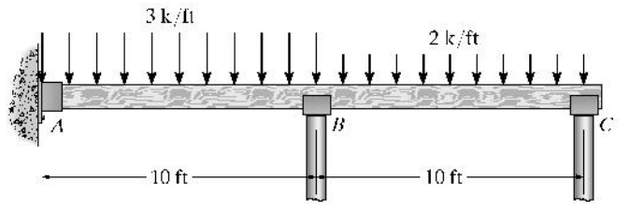

$$\Delta_B = \int_0^L \frac{mM}{EI}dx = \int_0^{10} \frac{(1x)[20(5+x) + \frac{3}{2}x^2]x}{EI}dx + 0 = \frac{15{,}416.7}{EI}$$

$$\Delta_C = \int_0^L \frac{mM}{EI}dx = \int_0^{10} \frac{(10+x)[20(5+x) + \frac{3}{2}x^2]}{EI}dx + \int_0^{10} \frac{(1x)(x^2)}{EI}dx = \frac{42{,}916.7}{EI}$$

$$f_{BB} = \int_0^L \frac{m^2}{EI}dx = \int_0^{10} \frac{x^2}{EI}dx + 0 = \frac{333.3}{EI}$$

$$f_{CC} = \int_0^L \frac{m^2}{EI}dx = \int_0^{10} \frac{x^2}{EI}dx + \int_0^{10} \frac{(10+x)^2}{EI}dx = \frac{2666.7}{EI}$$

$$f_{CB} = \int_0^L \frac{m^2}{EI}dx = \int_0^{10} \frac{(10+x)(x)}{EI}dx + 0 = \frac{833.3}{EI} = f_{BC}$$

$$\Delta_B + B_y f_{BB} + C_y f_{BC} = 0$$

$$15{,}416.7 + B_y(333.3) + C_y(833.3) = 0$$

$$\Delta_C + B_y f_{CB} + C_y f_{CC} = 0$$

$$42{,}916.7 + B_y(833.3) + C_y(2666.7) = 0$$

$$C_y = -7.5 \text{ k}$$

$$B_y = -27.5 \text{ k}$$

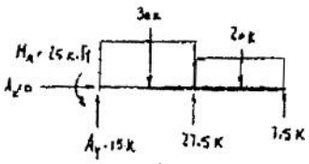

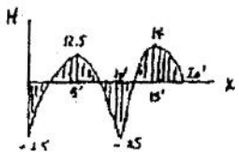

$$20(5+x) + \frac{3}{2}x^2$$

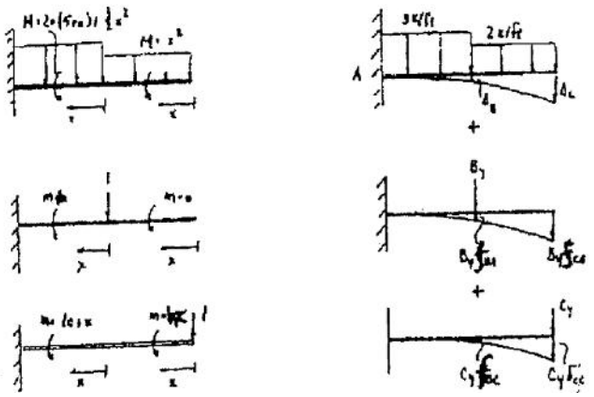

www.e-kitabi.com

c10.qxd 6/26/08 4:53 PM Page 276

© 2009 by R.C. Hibbeler. Published by Pearson Prentice Hall, Pearson Education, Inc., Upper Saddle River, NJ. All rights reserved. This material is protected under all copyright laws as they currently exist. No portion of this material may be reproduced, in any form or by any means, without permission in writing from the publisher.

10–17. Determine the reactions at the fixed supports, A and B. EI is constant.

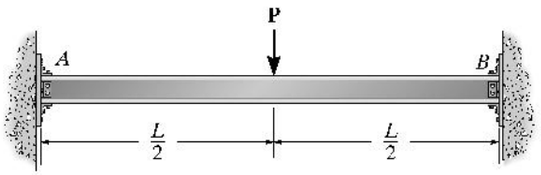

$\theta - \theta = 0$

$\theta = A_y' = \dfrac{PL^2}{16EI}$

$\theta' = A_y'' = \dfrac{ML}{2EI}$

$\dfrac{PL^2}{16EI} - \dfrac{ML}{2EI} = 0$

$M = \dfrac{PL}{8}$ **Ans**

From equilibrium and symmetry:

$M_A = M_B = \dfrac{PL}{8}$ **Ans**

From equilibrium and symmetry:

$A_y = B_y = \dfrac{P}{2}$ **Ans**

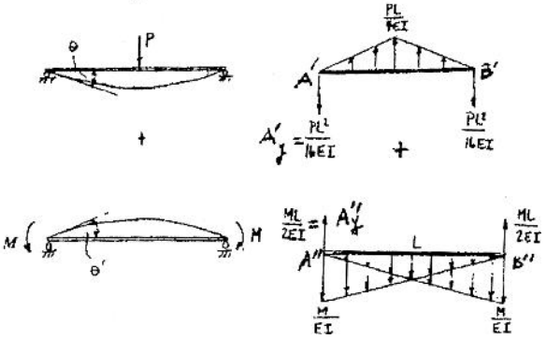

10–18. Draw the moment diagram for the fixed-end beam. EI is constant.

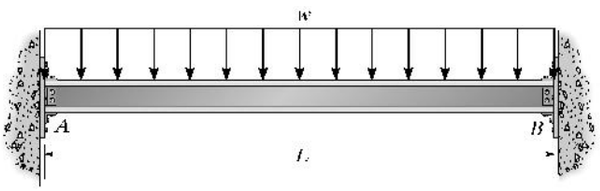

$\theta + \theta' = 0$

$\theta = A_y' = \dfrac{wL^3}{24EI}$

$\theta' = A_y'' = \dfrac{ML}{2EI}$

$\dfrac{wL^3}{24EI} + \dfrac{ML}{2EI} = 0$

$M = M_A = M_B = -\dfrac{wL^2}{12}$

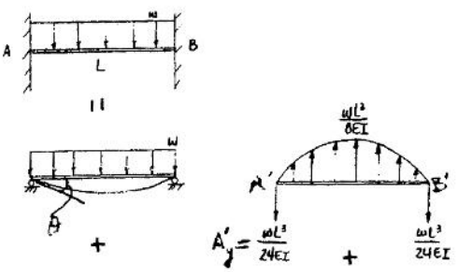

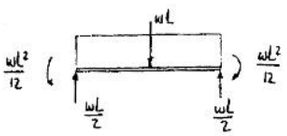

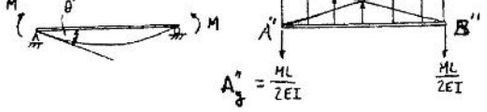

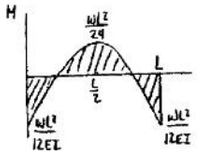

www.e-kitabi.com

c10.qxd 6/26/08 4:53 PM Page 277

© 2009 by R.C. Hibbeler. Published by Pearson Prentice Hall, Pearson Education, Inc., Upper Saddle River, NJ. All rights reserved. This material is protected under all copyright laws as they currently exist. No portion of this material may be reproduced, in any form or by any means, without permission in writing from the publisher.

10–19. Determine the reactions at the supports. EI is constant.

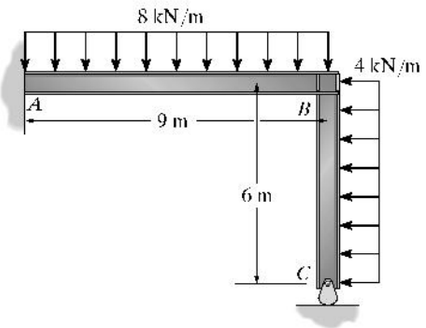

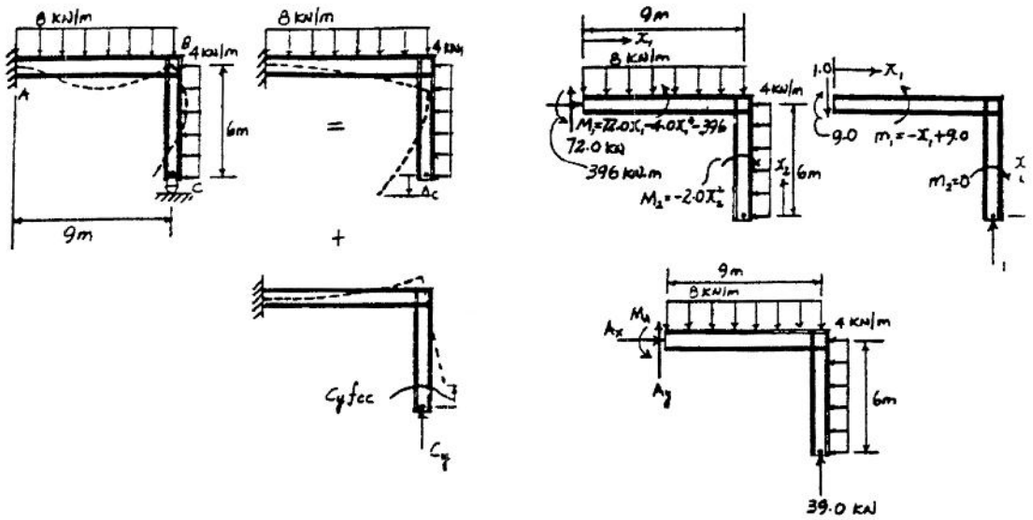

Compatibility equation

$$(+\downarrow) \quad 0 = \Delta_C - C_y f_{CC} \qquad (1)$$

Use virtual work method

$$\Delta_C = \int_0^L \frac{mM}{EI}dx = \int_0^9 \frac{(-x_1 + 9)(72x_1 - 4x_1^2 - 396)}{EI}dx_1 = \frac{-9477}{EI}$$

$$f_{CC} = \int_0^L \frac{mm}{EI}dx = \int_0^9 \frac{(-x_1 + 9)^2}{EI}dx_1 = \frac{243.0}{EI}$$

From Eq. 1 $\qquad 0 = \frac{9477}{EI} - \frac{243.0}{EI}C_y$

$C_y = 39.0$ kN

$A_y = 33.0$ kN

$A_x = 24.0$ kN

$M_A = 45.0$ kN·m

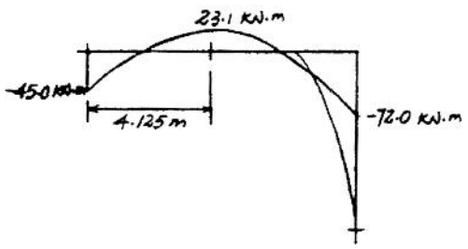

www.e-kitabi.com

c10.qxd 6/26/08 4:53 PM Page 278

© 2009 by R.C. Hibbeler. Published by Pearson Prentice Hall, Pearson Education, Inc., Upper Saddle River, NJ. All rights reserved. This material is protected under all copyright laws as they currently exist. No portion of this material may be reproduced, in any form or by any means, without permission in writing from the publisher.

***10–20.** Determine the reactions at the supports. EI is constant.

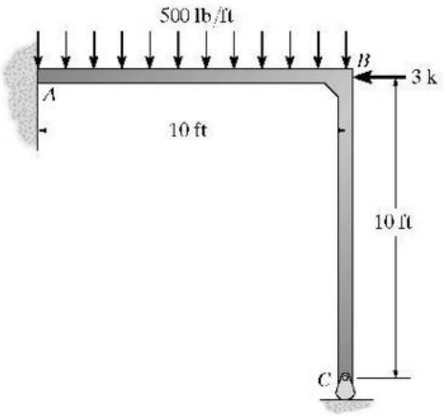

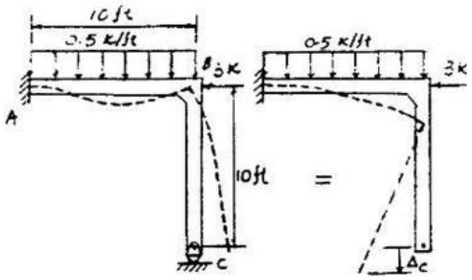

Compatibility equation

$$(+\downarrow) \quad 0 = \Delta_C - C_y f_{CC} \qquad (1)$$

+

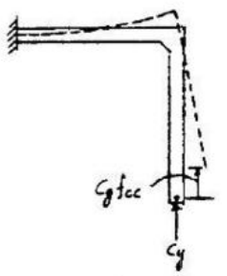

Use virtual work method

$$\Delta_C = \int_0^L \frac{mM}{EI}dx = \int_0^{10} \frac{(x_1)(-0.25x_1^2)}{EI}dx_1 = \frac{-625}{EI}$$

$$f_{CC} = \int_0^L \frac{mm}{EI}dx = \int_0^{10} \frac{(x_1)^2}{EI}dx_1 = \frac{333.33}{EI}$$

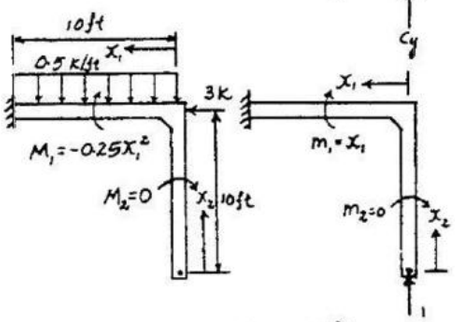

From Eq. 1 $$0 = \frac{625}{EI} - \frac{333.33}{EI}C_y$$

$C_y = 1.875$ k **Ans**

$A_x = 3.00$ k **Ans**

$A_y = 3.125$ k **Ans**

$M_A = 6.25$ k·ft **Ans**

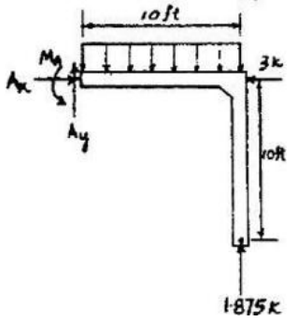

www.e-kitabi.com

c10.qxd 6/26/08 4:53 PM Page 279

© 2009 by R.C. Hibbeler. Published by Pearson Prentice Hall, Pearson Education, Inc., Upper Saddle River, NJ. All rights reserved. This material is protected under all copyright laws as they currently exist. No portion of this material may be reproduced, in any form or by any means, without permission in writing from the publisher.

10–21. Determine the reactions at the supports, then draw the moment diagrams for each member. Assume A and B are pins and the joint at C is fixed connected. EI is constant.

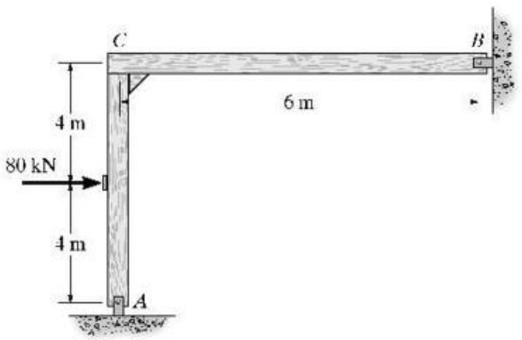

$\overset{+}{\rightarrow}\Sigma F_x = 0;\quad 80\text{ kN} - B_x = 0$

$B_x = 80\text{ kN}$

$\zeta + \Sigma M_B = 0;\quad 80\text{ kN}(4\text{ m}) - A_y(6\text{ m}) = 0$

$A_y = 53.33\text{ kN}$

$+\downarrow \Sigma F_y = 0;\quad -53.33\text{ kN} - B_y = 0$

$B_y = 53.33\text{ kN}$

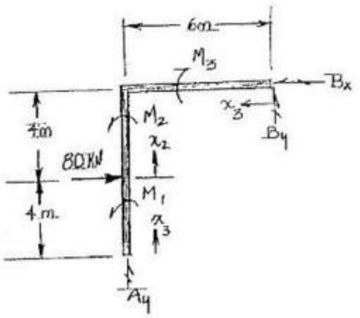

$\overset{+}{\rightarrow}\Sigma F_x = 0;\quad 1 - B_x = 0$

$B_x = 1\text{ kN}$

$\zeta + \Sigma M_B = 0;\quad 1\text{ kN}(8\text{ m}) - A_y(6\text{ m}) = 0$

$A_y = 1.333\text{ kN}$

$+\downarrow \Sigma F_y = 0;\quad -1.333\text{ kN} - B_y = 0$

$B_y = -1.333\text{ kN}$

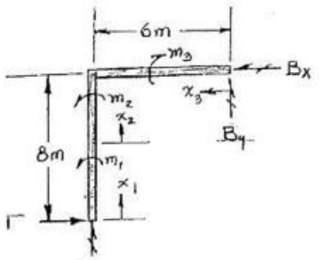

$\zeta + \Sigma M_1 = 0;\quad M_1 = 0$ $\qquad \zeta + \Sigma m_1 = 0;\quad m_1 + 1(x_1) = 0$

$m_1 = -x_1$

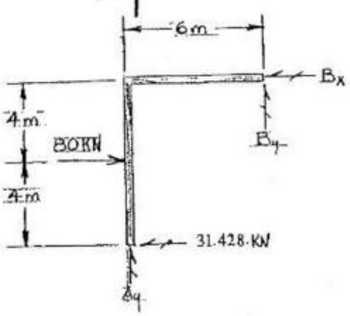

$\zeta + \Sigma M_2 = 0;\quad M_2 + 80(x_2) = 0$ $\qquad \zeta + \Sigma m_2 = 0;\quad m_2 + 1(4 + x_2) = 0$

$M_2 = -80x$ $\qquad m_2 = -4 - x_2$

$\zeta + \Sigma M_3 = 0;\quad -M_3 - 53.333\text{ kN}(x_3) = 0$ $\qquad \zeta + \Sigma m_3 = 0;\quad -m_3 - 1.333x_3 = 0$

$M_3 = -53.333x$ $\qquad m_3 = -1.333x$

www.e-kitabi.com

c10.qxd 6/26/08 4:53 PM Page 280

© 2009 by R.C. Hibbeler. Published by Pearson Prentice Hall, Pearson Education, Inc., Upper Saddle River, NJ. All rights reserved. This material is protected under all copyright laws as they currently exist. No portion of this material may be reproduced, in any form or by any means, without permission in writing from the publisher.

10–22. Determine the reactions at the supports, then draw the moment diagram for each member. EI is constant.

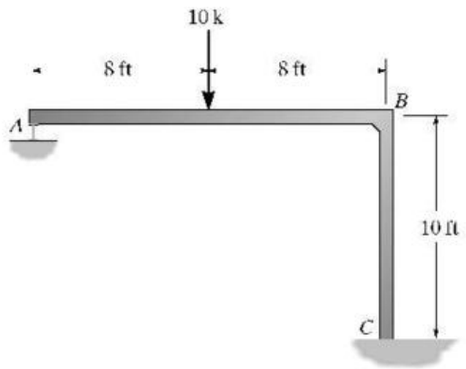

Compatibility equation:

$$(+\downarrow) \quad 0 = \Delta_A - A_y f_{AA} \qquad (1)$$

Use virtual work method:

$$\Delta_A = \int_0^L \frac{mM}{EI}dx = \int_0^8 \frac{(8+x_2)(-10x_2)}{EI}dx_2 + \int_0^{10} \frac{(16)(-80)}{EI}dx_3 = \frac{-17\,066.67}{EI}$$

$$f_{AA} = \int_0^L \frac{mm}{EI}dx = \int_0^8 \frac{(x_1)^2}{EI}dx_1 + \int_0^8 \frac{(8+x_2)^2}{EI}dx_2 + \int_0^{10} \frac{(16)^2}{EI}dx_3 = \frac{3925.33}{EI}$$

From Eq.1 $\quad 0 = \dfrac{17\,066.67}{EI} - \dfrac{3925.33}{EI}A_y$

$A_y = 4.348\text{ k} = 4.35\text{ k}$ **Ans**

$C_x = 0\text{ k}$ **Ans**

$C_y = 5.65\text{ k}$ **Ans**

$M_C = 10.4\text{ k}\cdot\text{ft}$ **Ans**

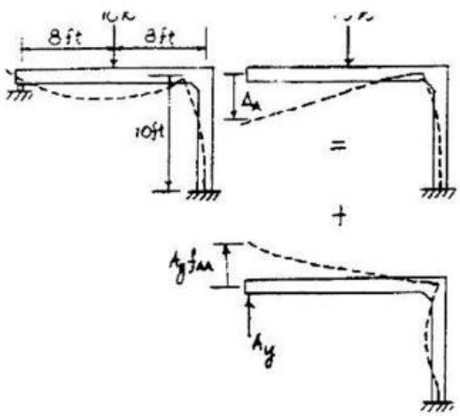

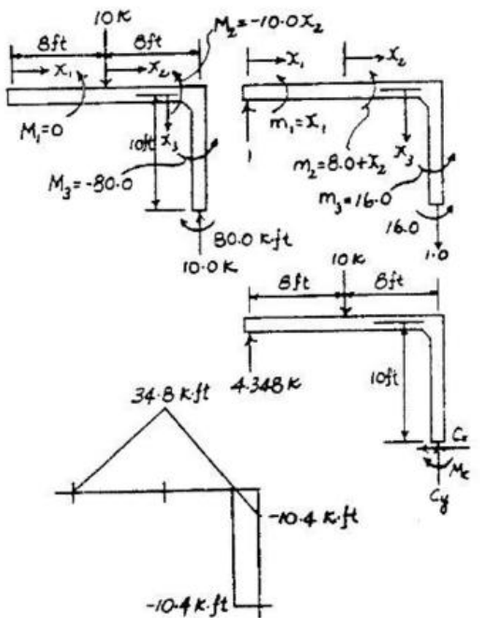

www.e-kitabi.com

c10.qxd 6/26/08 4:53 PM Page 281

© 2009 by R.C. Hibbeler. Published by Pearson Prentice Hall, Pearson Education, Inc., Upper Saddle River, NJ. All rights reserved. This material is protected under all copyright laws as they currently exist. No portion of this material may be reproduced, in any form or by any means, without permission in writing from the publisher.

10–23. Determine the reactions at the supports, then draw the moment diagram for each member. EI is constant.

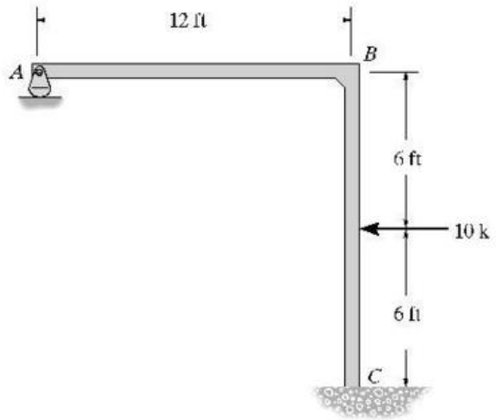

Compatibility equation:

$$(+\downarrow) \quad 0 = \Delta_A - A_y f_{AA} \qquad (1)$$

Use virtual work method:

$$\Delta_A = \int_0^L \frac{mM}{EI}dx = \int_0^6 \frac{(12)(-10x_3)}{EI}dx_3 = \frac{-2160}{EI}$$

$$f_{AA} = \int_0^L \frac{mm}{EI}dx = \int_0^{12} \frac{(x_1)^2}{EI}dx_1 + \int_0^6 \frac{(12)^2}{EI}dx_2 + \int_0^6 \frac{(12)^2}{EI}dx_3 = \frac{2304}{EI}$$

From Eq. 1 $\quad 0 = \frac{2160}{EI} - \frac{2304}{EI}A_y$

$A_y = 0.9375$ k **Ans**

$C_x = 10.0$ k **Ans**

$C_y = 0.9375$ k **Ans**

$M_C = 48.75$ k·ft **Ans**

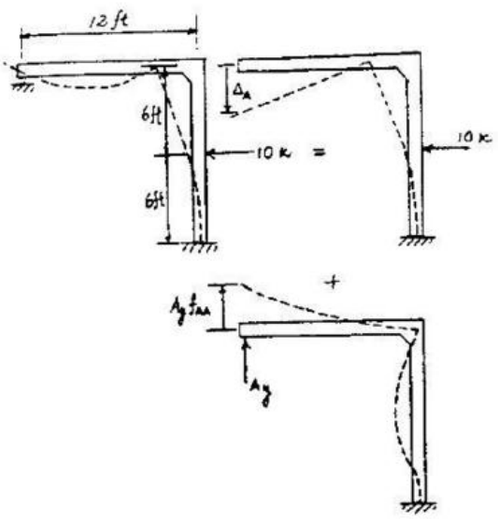

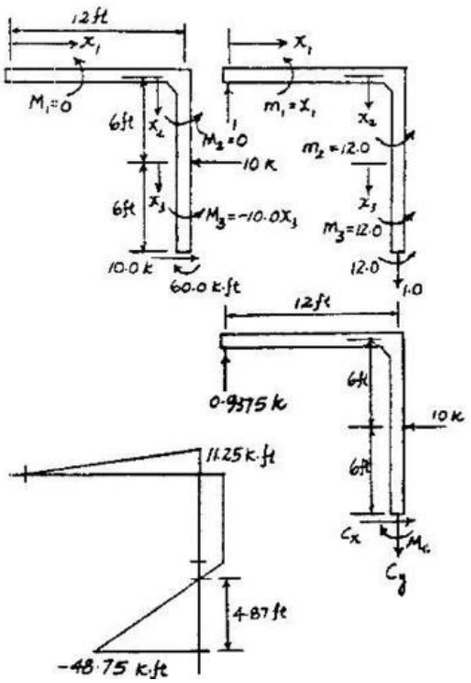

www.e-kitabi.com

c10.qxd 6/26/08 4:53 PM Page 282

© 2009 by R.C. Hibbeler. Published by Pearson Prentice Hall, Pearson Education, Inc., Upper Saddle River, NJ. All rights reserved. This material is protected under all copyright laws as they currently exist. No portion of this material may be reproduced, in any form or by any means, without permission in writing from the publisher.

***10–24.** Determine the reactions at the supports if the support at C is forced upwards 0.15 in. Take $E = 29(10^3)$ ksi, $I = 600\ \text{in}^4$.

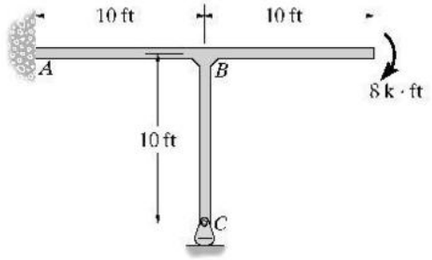

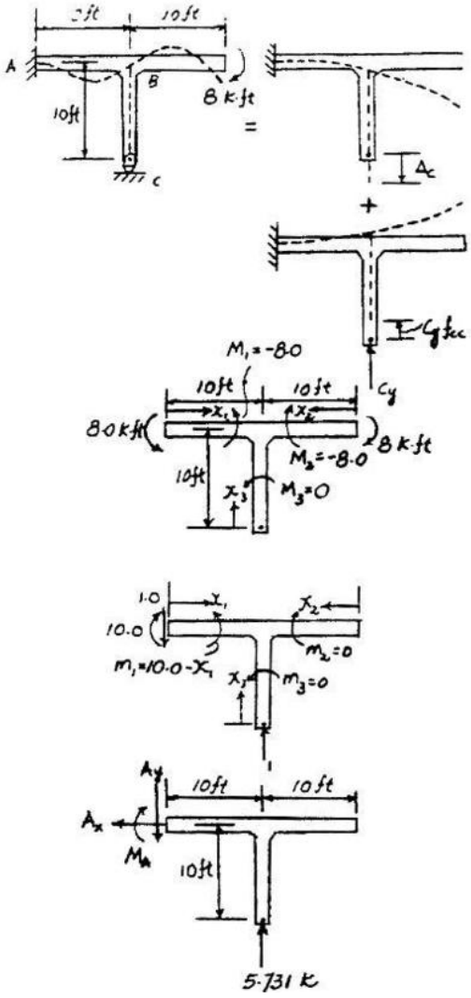

Compatibility equation :

$$(+\uparrow) \quad 0.15 = -\Delta_C + C_y f_{CC} \qquad (1)$$

Use virtual work method :

$$\Delta_C = \int_0^L \frac{mM}{EI}dx = \int_0^{10} \frac{(10 - x_1)(-8)}{EI}dx_1 = -\frac{400}{EI}$$

$$f_{CC} = \int_0^L \frac{mm}{EI}dx = \int_0^{10} \frac{(10 - x_1)^2}{EI}dx_1 = \frac{333.33}{EI}$$

From (1) $$0.15 = -\frac{400(1728)}{29(10^3)(600)} + C_y \frac{333.33(1728)}{29(10^3)(600)}$$

$C_y = 5.73$ k **Ans**

$A_y = 5.73$ k **Ans**

$A_x = 0$ **Ans**

$M_A = 49.3$ k·ft **Ans**

www.e-kitabi.com

© 2009 by R.C. Hibbeler. Published by Pearson Prentice Hall, Pearson Education, Inc., Upper Saddle River, NJ. All rights reserved. This material is protected under all copyright laws as they currently exist. No portion of this material may be reproduced, in any form or by any means, without permission in writing from the publisher.

10–25. Determine the reactions at the supports A and D. The moment of inertia of each segment of the frame is listed in the figure. Take $E = 29(10^3)$ ksi.

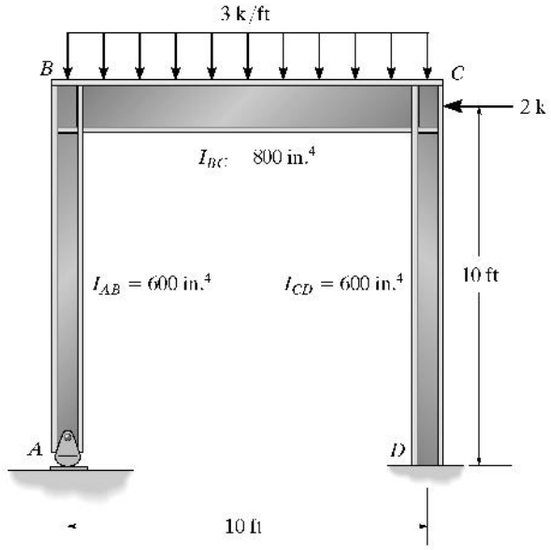

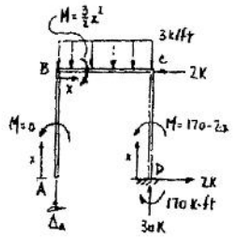

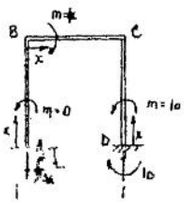

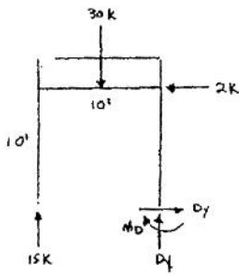

$$\Delta_A = \int_0^L \frac{mM}{EI}dx = 0 + \int_0^{10}\frac{(1x)(\frac{3}{2}x^2)}{EI_{BC}}dx + \int_0^{10}\frac{(10)(170-2x)}{EI_{CD}}dx$$

$$= \frac{18,812.5}{EI_{CD}}$$

$$f_{AA} = \int_0^L \frac{m^2}{EI}dx = 0 + \int_0^{10}\frac{x^2}{EI_{BC}}dx + \int_0^{10}\frac{10^2}{EI_{CD}}dx = \frac{1250}{EI_{CD}}$$

$$+\downarrow \Delta_A + A_y f_{AA} = 0$$

$$\frac{18,812.5}{EI_{CD}} + A_y\left(\frac{1250}{EI_{CD}}\right) = 0$$

$A_y = -15.0$ k **Ans**

$+\uparrow \Sigma F_y = 0$; $-30 + 15 + D_y = 0$; $D_y = 15.0$ k **Ans**

$\overset{+}{\rightarrow} \Sigma F_x = 0$; $D_x = 2$ k **Ans**

$\zeta + \Sigma M_D = 0$; $15.0(10) - 2(10) - 30(5) + M_D = 0$; $M_D = 19.5$ k·ft **Ans**

www.e-kitabi.com

c10.qxd 6/26/08 4:53 PM Page 284

© 2009 by R.C. Hibbeler. Published by Pearson Prentice Hall, Pearson Education, Inc., Upper Saddle River, NJ. All rights reserved. This material is protected under all copyright laws as they currently exist. No portion of this material may be reproduced, in any form or by any means, without permission in writing from the publisher.

10–26. Determine the force in each member of the truss. The cross-sectional area of each member is indicated in the figure. Assume the members are pin connected at their ends. $E = 29(10^3)$ ksi.

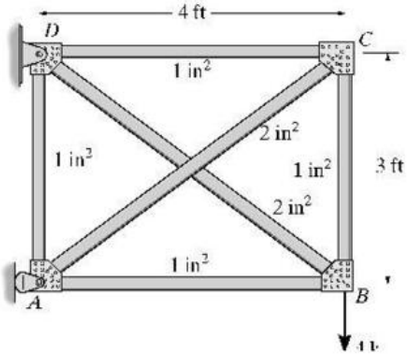

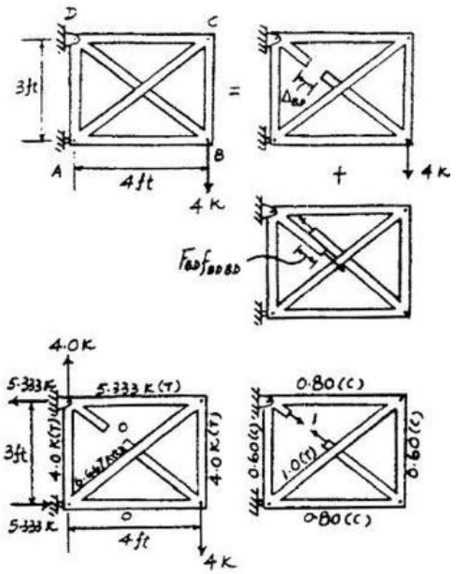

Compatibility equation:

$$0 = \Delta_{BD} + F_{BD} f_{BDBD} \qquad (1)$$

Use virtual work method:

$$\Delta_{BD} = \Sigma \frac{nNL}{AE} = \frac{2(-0.6)(4)(3)}{(1)E} + \frac{(-0.8)(5.333)(4)}{(1)E} + \frac{(1.0)(-6.667)(5)}{2E} = \frac{-48.133}{E}$$

$$f_{BDBD} = \Sigma \frac{nnL}{AE} = \frac{2(-0.6)^2(3)}{(1)E} + \frac{2(-0.8)^2(4)}{(1)E} + \frac{2(1.0)^2(5)}{(2)E} = \frac{12.28}{E}$$

From (1) $$0 = \frac{-48.133}{E} + F_{BD}\frac{12.28}{E}$$

$$F_{BD} = 3.92 \text{ k (T)} \qquad \text{Ans}$$

Joint *B*

$$\overset{+}{\rightarrow} \Sigma F_x = 0; \quad F_{BA} - \left(\frac{4}{5}\right) 3.920 = 0; \quad F_{BA} = 3.136\text{k} = 3.14 \text{ k (C)} \qquad \text{Ans}$$

$$+\uparrow \Sigma F_y = 0; \quad F_{BC} + \left(\frac{3}{5}\right) 3.920 - 4 = 0; \quad F_{BC} = 1.648 \text{ k} = 1.65 \text{ k (T)} \qquad \text{Ans}$$

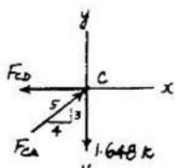

Joint *C*

$$+\uparrow \Sigma F_y = 0; \quad \frac{3}{5}F_{CA} - 1.648 = 0; \quad F_{CA} = 2.747 \text{ k} = 2.75 \text{ k (C)} \qquad \text{Ans}$$

$$\overset{+}{\leftarrow} \Sigma F_x = 0; \quad F_{CD} - \frac{4}{5}(2.747) = 0; \quad F_{CD} = 2.20 \text{ k (T)} \qquad \text{Ans}$$

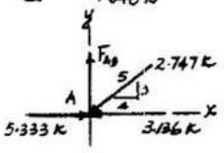

Joint *A*

$$+\uparrow \Sigma F_y = 0; \quad F_{AD} - \frac{3}{5}(2.747) = 0; \quad F_{AD} = 1.65 \text{ k (T)} \qquad \text{Ans}$$

$$\overset{+}{\rightarrow} \Sigma F_x = 0; \quad 5.333 - \frac{4}{5}(2.747) - 3.136 = 0 \qquad \text{Check}$$

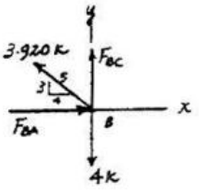

www.e-kitabi.com

c10.qxd 6/26/08 4:53 PM Page 285

© 2009 by R.C. Hibbeler. Published by Pearson Prentice Hall, Pearson Education, Inc., Upper Saddle River, NJ. All rights reserved. This material is protected under all copyright laws as they currently exist. No portion of this material may be reproduced, in any form or by any means, without permission in writing from the publisher.

10–27. Determine the force in each member of the truss. The cross-sectional area of each member is indicated in the figure. $E = 29(10^3)$ ksi. Assume the members are pin-connected at their ends.

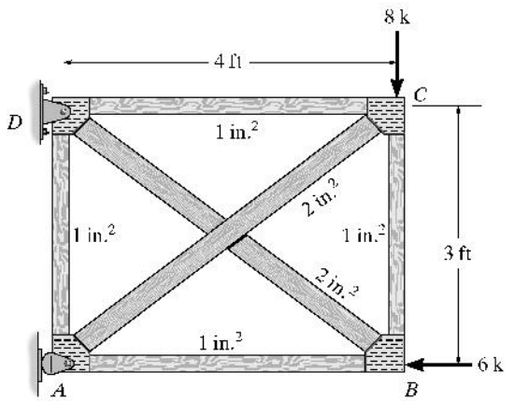

$$\Delta_{CB} = \Sigma\frac{nNL}{AE} = \frac{1}{E}\left[\frac{(1.33)(10.67)(4)}{1} + \frac{(1.33)(-6)(4)}{1} + \frac{(1)(8)(3)}{1} + \frac{(-1.667)(-13.33)(5)}{2}\right]$$

$$= \frac{104.4}{E}$$

$$f_{CBCB} = \Sigma\frac{n^2L}{AE} = \frac{1}{E}\left[\frac{2(1.33)^2(4)}{1} + \frac{2(1)^2(3)}{1} + \frac{2(-1.667)^2(5)}{2}\right]$$

$$= \frac{34.1}{E}$$

$$\Delta_{CB} + F_{CB}f_{CBCB} = 0$$

$$\frac{104.4}{E} + F_{CB}\left(\frac{34.1}{E}\right) = 0$$

$$F_{CB} = -3.062 \text{ k} = 3.06 \text{ k (C)} \quad \textbf{Ans}$$

Joint C:

$$+\uparrow \Sigma F_y = 0; \quad \frac{3}{5}F_{AC} - 8 + 3.062 = 0;$$

$$F_{AC} = 8.23 \text{ k (C)} \quad \textbf{Ans}$$

$$\overset{+}{\rightarrow}\Sigma F_x = 0; \quad \frac{4}{5}(8.23) - F_{DC} = 0;$$

$$F_{DC} = 6.58 \text{ k (T)} \quad \textbf{Ans}$$

Joint B:

$$+\uparrow \Sigma F_y = 0; \quad -3.062 + \left(\frac{3}{5}\right)(F_{DB}) = 0;$$

$$F_{DB} = 5.103 \text{ k} = 5.10 \text{ k (T)} \quad \textbf{Ans}$$

$$\overset{+}{\rightarrow}\Sigma F_x = 0; \quad F_{AB} - 6 - 5.103\left(\frac{4}{5}\right) = 0;$$

$$F_{AB} = 10.1 \text{ k (C)} \quad \textbf{Ans}$$

Joint A:

$$+\uparrow \Sigma F_y = 0; \quad -8.23\left(\frac{3}{5}\right) + F_{DA} = 0;$$

$$F_{DA} = 4.94 \text{ k (T)} \quad \textbf{Ans}$$

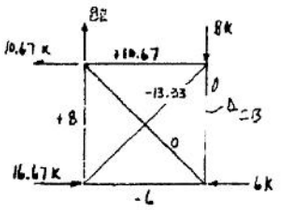

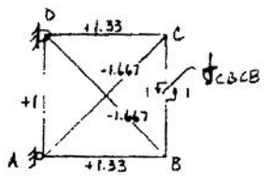

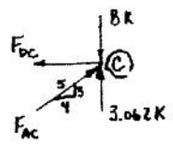

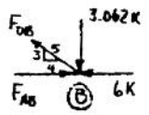

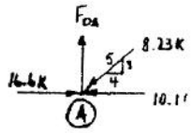

www.e-kitabi.com

c10.qxd 6/26/08 4:53 PM Page 286

© 2009 by R.C. Hibbeler. Published by Pearson Prentice Hall, Pearson Education, Inc., Upper Saddle River, NJ. All rights reserved. This material is protected under all copyright laws as they currently exist. No portion of this material may be reproduced, in any form or by any means, without permission in writing from the publisher.

***10–28.** Determine the force in each member of the pin-connected truss. AE is constant.

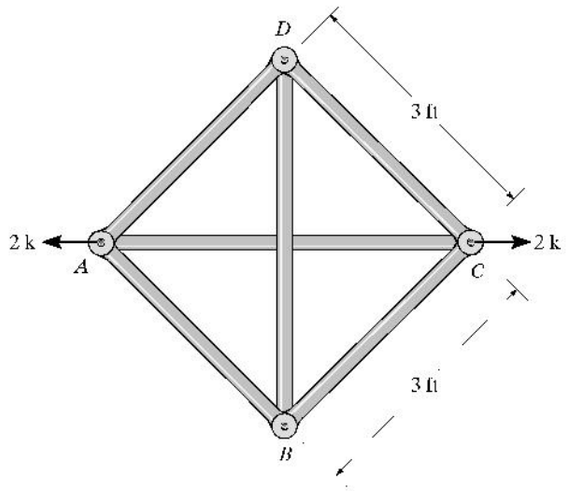

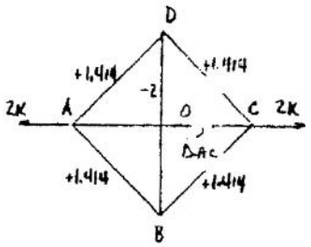

$$\Delta_{AC} = \Sigma\frac{nNL}{AE} = \frac{1}{AE}[(-0.707)(1.414)(3)(4) + (1)(-2)\sqrt{18}]$$
$$= -\frac{20.485}{AE}$$

$$f_{ACAC} = \Sigma\frac{n^2L}{AE} = \frac{1}{AE}[4(-0.707)^2(3) + 2(1)^2\sqrt{18}]$$
$$= \frac{14.485}{AE}$$

$$\Delta_{AC} + F_{AC}f_{ACAC} = 0$$
$$-\frac{20.485}{AE} + F_{AC}\left(\frac{14.485}{AE}\right) = 0$$
$$F_{AC} = 1.414\text{ k} = 1.41\text{ k (T)} \quad \textbf{Ans}$$

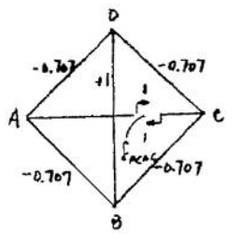

Joint C:

$+\uparrow\Sigma F_y = 0;\quad F_{DC} = F_{CB} = F$ **Ans**

$\overset{+}{\rightarrow}\Sigma F_x = 0;\quad 2 - 1.414 - 2F(\cos 45^\circ) = 0;$

$F_{DC} = F_{CB} = 0.414\text{ k (T)}$ **Ans**

Due to symmetry:

$F_{AD} = F_{AB} = 0.414\text{ k (T)}$ **Ans**

Joint D:

$+\uparrow\Sigma F_y = 0;\quad F_{DB} - 2(0.414)(\cos 45^\circ) = 0;$

$F_{DB} = 0.586\text{ k (C)}$ **Ans**

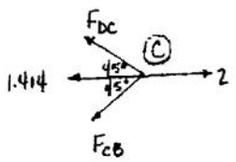

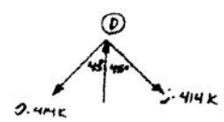

www.e-kitabi.com

c10.qxd 6/26/08 4:53 PM Page 287

© 2009 by R.C. Hibbeler. Published by Pearson Prentice Hall, Pearson Education, Inc., Upper Saddle River, NJ. All rights reserved. This material is protected under all copyright laws as they currently exist. No portion of this material may be reproduced, in any form or by any means, without permission in writing from the publisher.

10–29. Determine the force in member HG of the truss. AE is constant.

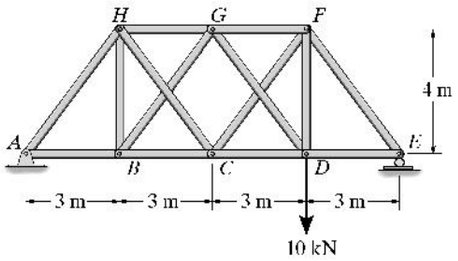

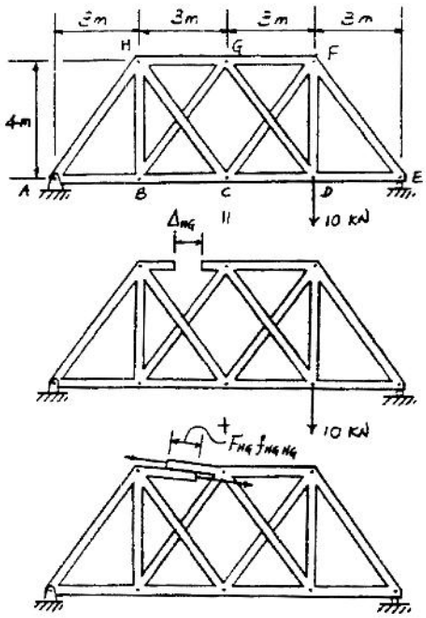

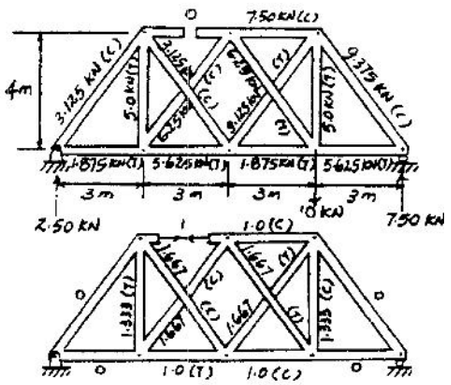

$$\Delta_{HG} = \Sigma\frac{nNL}{AE} = \frac{1}{AE}[1.333(5)(4) + (-1)(-7.5)(3) + (-1.333)(5)(4) + (-1)(1.875)(3) + (1)(5.625)(3) + (-1.667)(-6.25)(5) + (-1.667)(-3.125)(5) + (1.667)(3.125)(5) + (1.667)(6.25)(5)]$$

$$= \frac{190}{AE}$$

$$f_{HGHG} = \Sigma\frac{nnL}{AE} = \frac{1}{AE}[2(1.333)^2(4) + 4(1)^2(3) + 4(1.667)^2(5)]$$

$$= \frac{81.778}{AE}$$

$$\Delta_{HG} + F_{HG}f_{HGHG} = 0$$

$$\frac{190}{AE} + F_{HG}\left(\frac{81.778}{AE}\right) = 0$$

$$F_{HG} = -2.3234 \text{ kN} = 2.32 \text{ kN (C)} \qquad \textbf{Ans}$$

www.e-kitabi.com

c10.qxd 6/26/08 4:53 PM Page 288

© 2009 by R.C. Hibbeler. Published by Pearson Prentice Hall, Pearson Education, Inc., Upper Saddle River, NJ. All rights reserved. This material is protected under all copyright laws as they currently exist. No portion of this material may be reproduced, in any form or by any means, without permission in writing from the publisher.

10–30. Determine the force in member *HB* of the truss. *AE* is constant.

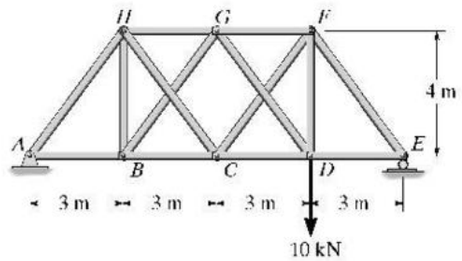

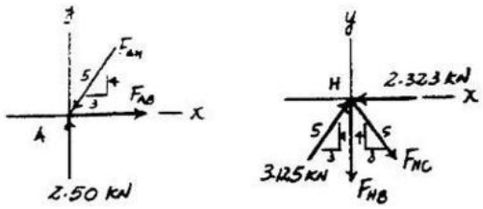

See solution to Prob. 10 – 29.

Joint *A* :

$+\uparrow \Sigma F_y = 0;\qquad 2.5 - \left(\frac{4}{5}\right) F_{AH} = 0$

$F_{AH} = 3.125 \text{ kN (C)}$

Joint *H* :

$\overset{+}{\rightarrow} \Sigma F_x = 0;\qquad \left(\frac{3}{5}\right)3.125 - 2.323 + \left(\frac{3}{5}\right) F_{HC} = 0$

$F_{HC} = 0.7473 \text{ kN (T)}$

$+\uparrow \Sigma F_y = 0;\qquad \left(\frac{4}{5}\right)3.125 - \left(\frac{4}{5}\right)0.7473 - F_{HB} = 0$

$F_{HB} = 1.90 \text{ kN (T)}$ **Ans**

10–31. Determine the force in member *HG*. *AE* is constant.

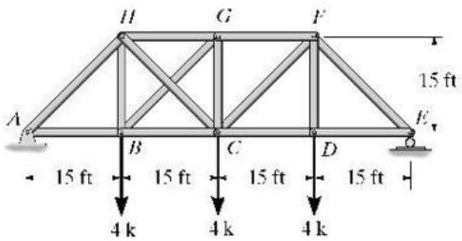

Compatibility equation :

$0 = \Delta_{HG} + F_{HG} f_{HGHG} \qquad (1)$

Use virtual work method :

$$\Delta_{HG} = \Sigma \frac{nNL}{AE} = \frac{(1)(12.0)(15)}{AE} + \frac{(1)(14)(15)}{AE} + \frac{(1)(8)(15)}{AE} + \frac{(-1.414)(-11.31)(21.21)}{AE} + \frac{(-1.414)(-8.485)(21.21)}{AE} = \frac{1103.97}{AE}$$

$$f_{HGHG} = \Sigma \frac{nnL}{AE} = \frac{4(1)^2(15)}{AE} + \frac{2(-1.414)^2(21.21)}{AE} = \frac{144.85}{AE}$$

From Eq. 1 $\qquad 0 = \frac{1103.97}{AE} + \frac{144.85}{AE} F_{HG}$

$F_{HG} = -7.621 \text{ k} = 7.62 \text{ k (C)}$ **Ans**

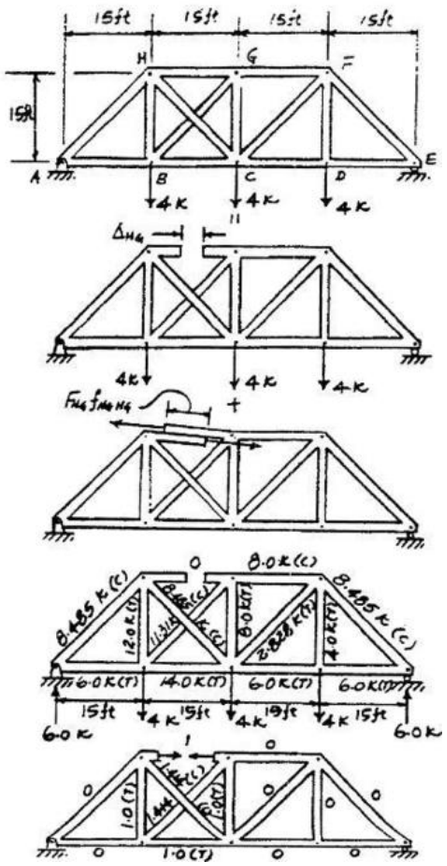

www.e-kitabi.com

c10.qxd 6/26/08 4:53 PM Page 289

© 2009 by R.C. Hibbeler. Published by Pearson Prentice Hall, Pearson Education, Inc., Upper Saddle River, NJ. All rights reserved. This material is protected under all copyright laws as they currently exist. No portion of this material may be reproduced, in any form or by any means, without permission in writing from the publisher.

***10–32.** Determine the force in member BE. AE is constant.

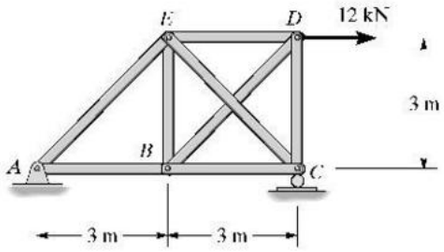

$$\Delta_{BE} + F_{BE}\delta_{BEBE} = 0$$

$$\Delta_{BE} = \frac{\Sigma NnL}{AE} = \frac{1}{AE}\{((6)(0)(3)) + ((6)(1)(3)) + ((0)(1)(3)) + (12)(1)(3)$$

$$+(0)(-1.414)(3\sqrt{2}) + (8.49)(0)(3\sqrt{2}) + (-8.49)(-1.414)(3\sqrt{2})\}$$

$$= \frac{104.912}{AE}$$

$$\delta_{BEBE} = \frac{\Sigma n^2 L}{AE} = \frac{1}{AE}\{(1)^2(3) + (1)^2(3) + (1)^2(3) + (1)^2(3) + (-1.414)^2(3\sqrt{2})$$

$$+(-1.414)^2(3\sqrt{2}) + 0 + 0\}$$

$$= \frac{28.971}{AE}$$

$$\frac{104.912}{AE} + F_{BE}\left(\frac{28.971}{AE}\right) = 0$$

$F_{BE} = -3.621$ kN $= 3.62$ kN (C) **Ans**

REAL

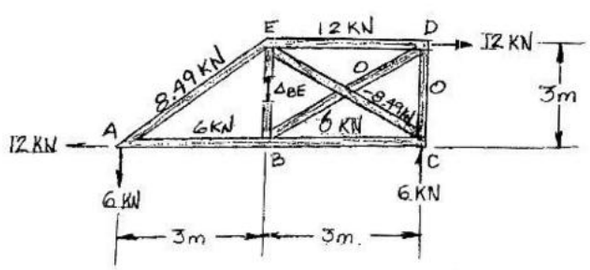

VIRTUAL

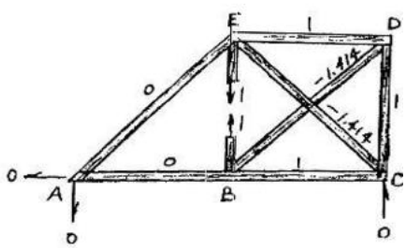

www.e-kitabi.com

c10.qxd 6/26/08 4:53 PM Page 290

© 2009 by R.C. Hibbeler. Published by Pearson Prentice Hall, Pearson Education, Inc., Upper Saddle River, NJ. All rights reserved. This material is protected under all copyright laws as they currently exist. No portion of this material may be reproduced, in any form or by any means, without permission in writing from the publisher.

10–33. Determine the force in member DF of the truss. AE is constant.

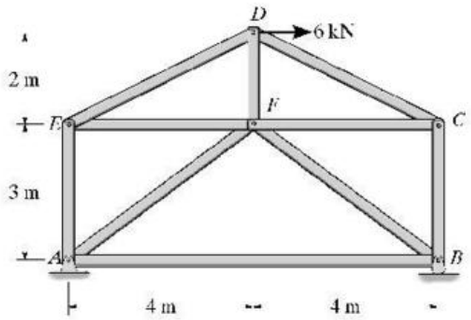

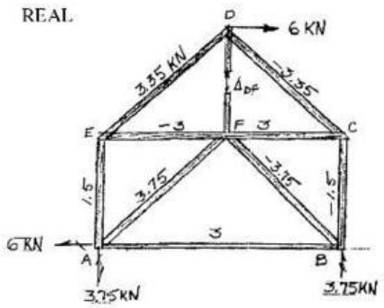

$$\Delta_{DF} + F_{DF}\delta_{DFDF} = 0$$

$$\Delta_{DF} = \frac{\Sigma NnL}{AE} = \frac{1}{AE}\{(1.5)(-0.5)(3) + (3.35)(-1.118)(4.472) + (-3.35)(-1.118)(4.472)$$
$$+ (-1.5)(-0.5)(3) + (3)(-0.667)(8) + (3.75)(0.833)(5) + (3)(1)(4)$$
$$+ (-3.75)(0.833)(5) + (-3)(1)(4)\}$$
$$= \frac{16.00}{AE}$$

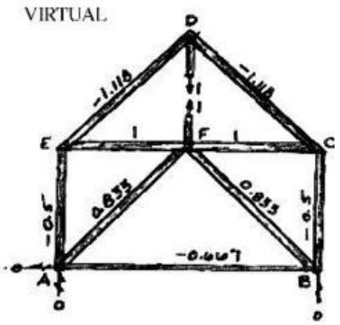

$$\delta_{DFDF} = \frac{n^2L}{AE} = \frac{1}{AE}\{(0.5)^2(3) + (1.118)^2(4.472) + (1.118)^2(4.72) + (0.5)^2(3)$$
$$+ (0.667)^2(8) + (0.833)^2(5) + (0.833)^2(5) + (1)^2(4) + (1)^2(4) + (1)^2(2)\}$$
$$= \frac{33.18}{AE}$$

$$\frac{16}{AE} + F_{DF}\left(\frac{33.18}{AE}\right) = 0$$

$F_{DF} = 0.482$ kN (C) **Ans**

10–34. The cantilevered beam is supported at one end by a $\frac{1}{2}$-in.-diameter suspender rod AC and fixed at the other end B. Determine the force in the rod due to a uniform loading of 4 k/ft. $E = 29(10^3)$ ksi for both the beam and rod.

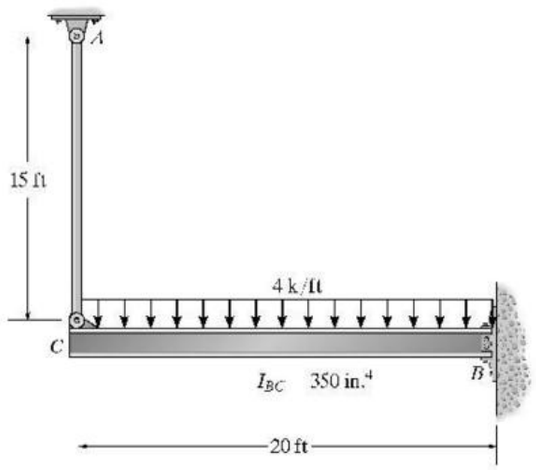

$$\Delta_{AC} = \int_0^L \frac{mM}{EI}dx + \Sigma\frac{nNL}{AE} = \int_0^{20}\frac{(1x)(-2x^2)}{EI}dx + 0 = -\frac{80,000}{EI}$$

$$f_{ACAC} = \int_0^L \frac{m^2}{EI}dx + \Sigma\frac{n^2L}{AE} = \int_0^{20}\frac{x^2}{EI}dx + \frac{(1)^2(15)}{AE} = \frac{2666.67}{EI} + \frac{15}{AE}$$

$$+\downarrow \quad \Delta_{AC} + F_{AC}f_{ACAC} = 0$$

$$-\frac{80,000}{EI} + F_{AC}\left(\frac{2666.67}{EI} + \frac{15}{AE}\right) = 0$$

$$-\frac{80,000}{\frac{350}{12^4}} + F_{AC}\left(\frac{2666.67}{\frac{350}{12^4}} + \frac{15}{\pi(\frac{0.25}{12})^2}\right) = 0$$

$F_{AC} = 28.0$ k **Ans**

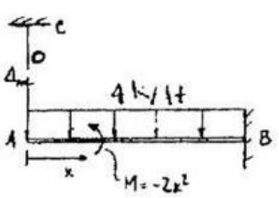

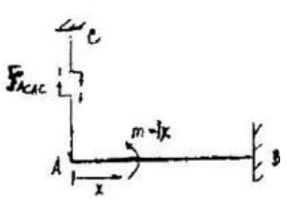

www.e-kitabi.com

c10.qxd 6/26/08 4:53 PM Page 291

© 2009 by R.C. Hibbeler. Published by Pearson Prentice Hall, Pearson Education, Inc., Upper Saddle River, NJ. All rights reserved. This material is protected under all copyright laws as they currently exist. No portion of this material may be reproduced, in any form or by any means, without permission in writing from the publisher.

10–35. The structural assembly supports the loading shown. Draw the moment diagrams for each of the beams. Take $I = 100(10^6)$ mm^4 for the beams and $A = 200$ mm^2 for the tie rod. All members are made of steel for which $E = 200$ GPa.

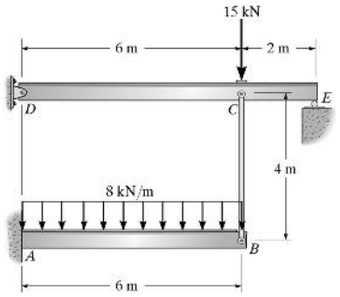

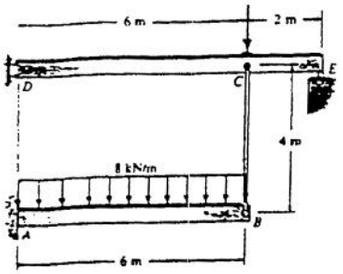

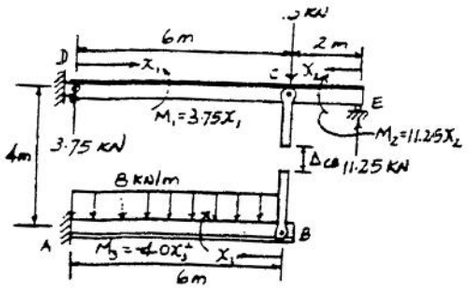

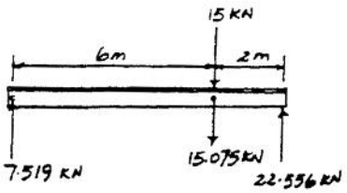

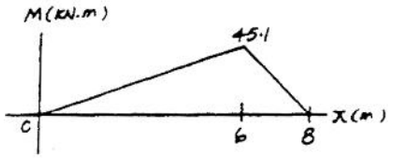

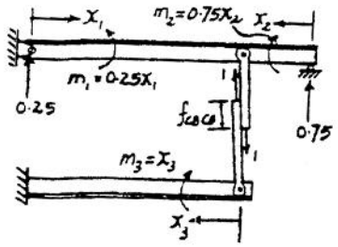

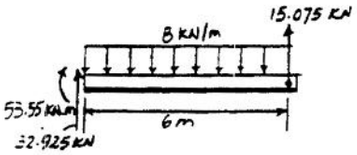

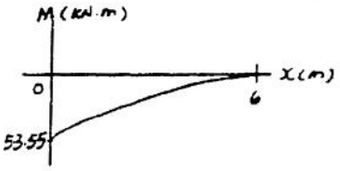

Compatibility equation

$$0 = \Delta_{CB} + F_{CB} f_{CBCB} \qquad (1)$$

Use virtual work method

$$\Delta_{CB} = \int_0^L \frac{mM}{EI}dx = \int_0^6 \frac{(0.25x_1)(3.75x_1)}{EI}dx_1 + \int_0^2 \frac{(0.75x_2)(11.25x_2)}{EI}dx_2 + \int_0^6 \frac{(1x_3)(-4x_3^2)}{EI}dx_3 = \frac{-1206}{EI}$$

$$f_{CBCB} = \int_0^L \frac{mm}{EI}dx + \Sigma \frac{nnL}{AE} = \int_0^6 \frac{(0.25x_1)^2}{EI}dx_1 + \int_0^2 \frac{(0.75x_2)^2}{EI}dx_2 + \int_0^6 \frac{(1x_3)^2}{EI}dx_3 + \frac{(1)^2(4)}{AE}$$

$$= \frac{78.0}{EI} + \frac{4.00}{AE}$$

From Eq. 1

$$-\frac{1206}{E100(10^{-6})} + F_{CB}\left[\frac{78.0}{E(100)(10^{-6})} + \frac{4.00}{200(10^{-6})E}\right] = 0$$

$$F_{CB} = 15.075 \text{ kN (T)} = 15.1 \text{ kN (T)}$$

www.e-kitabi.com

c10.qxd 6/26/08 4:53 PM Page 292

© 2009 by R.C. Hibbeler. Published by Pearson Prentice Hall, Pearson Education, Inc., Upper Saddle River, NJ. All rights reserved. This material is protected under all copyright laws as they currently exist. No portion of this material may be reproduced, in any form or by any means, without permission in writing from the publisher.

***10–36.** The queen-post trussed beam is used to support a uniform load of 4 k/ft. Determine the force developed in each of the five struts. Neglect the thickness of the beam and assume the truss members are pin connected to the beam. Also, neglect the effect of axial compression and shear in the beam. The cross-sectional area of each strut is 3 in^2, and for the beam $I = 600\ in^4$. Also, $E = 29(10^3)$ ksi.

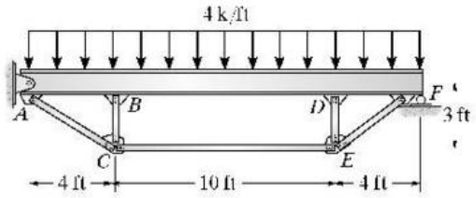

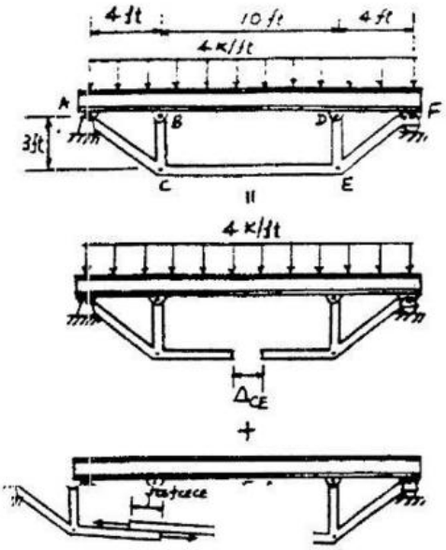

Compatibility equation

$$0 = \Delta_{CE} + F_{CE} f_{CECE} \qquad (1)$$

Use virtual work method:

$$\Delta_{CE} = \int_0^6 \frac{(0.25x_1)(3.75x_1)}{EI} dx_1 + \int_0^2 \frac{(0.75x_2)(11.25x_2)}{EI} dx_2$$

$$\Delta_{CE} = \int_0^L \frac{mM}{EI} dx = 2\int_0^4 \frac{(-0.75x_1)(36x_1 - 2x_1^2)}{EI} dx_1 + \int_0^{10} \frac{(-3)(20x_2 - 2x_2^2 + 112)}{EI} dx_2 = -\frac{5320}{EI}$$

$$f_{CECE} = \int_0^L \frac{mM}{EI} dx + \Sigma \frac{nnL}{AE} = 2\int_0^4 \frac{(-0.75x_1)^2}{EI} dx_1 + \int_0^{10} \frac{(-3)^2}{EI} dx_2 + \frac{2(1.25)^2(5)}{AE} + \frac{2(-0.75)^2(3)}{AE} + \frac{(1)^2(10)}{AE}$$

$$= \frac{114.0}{EI} + \frac{29.0}{AE}$$

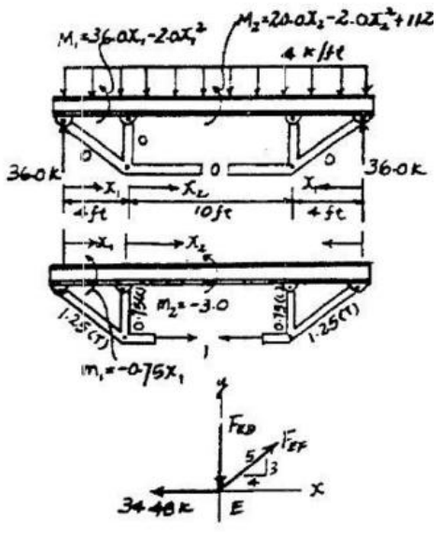

From Eq. 1:

$$0 = -\frac{5320(1728)}{E(600)} + F_{CE}\left[\frac{114(1728)}{E(600)} + \frac{29(12)}{3E}\right]$$

$F_{CE} = 34.48\ \text{k} = 34.5\ \text{k (T)}$ **Ans**

Joint *E*:

$\overset{+}{\rightarrow} \Sigma F_x = 0;\quad \frac{4}{5}F_{EF} - 34.48 = 0;\quad F_{EF} = 43.1\ \text{k (T)}$ **Ans**

$+\uparrow \Sigma F_y = 0;\quad -F_{ED} + \frac{3}{5}(43.10) = 0;\quad F_{ED} = 25.9\ \text{k (C)}$ **Ans**

Due to symmetry:

$F_{AC} = F_{EF} = 43.1\ \text{k (T)}$ **Ans**

$F_{CB} = F_{ED} = 25.9\ \text{k (C)}$ **Ans**

www.e-kitabi.com

c10.qxd 6/26/08 4:53 PM Page 293

© 2009 by R.C. Hibbeler. Published by Pearson Prentice Hall, Pearson Education, Inc., Upper Saddle River, NJ. All rights reserved. This material is protected under all copyright laws as they currently exist. No portion of this material may be reproduced, in any form or by any means, without permission in writing from the publisher.

10–37. The king-post trussed beam supports a concentrated force of 40 k at its center. Determine the force in each of the three struts. The struts each have a cross-sectional area of 2 in^2. Assume they are pin connected at their end points. Neglect both the depth of the beam and the effect of axial compression in the beam. Take $E = 29(10^3)$ ksi for both the beam and struts. Also, $I_{AB} = 400$ in^4.

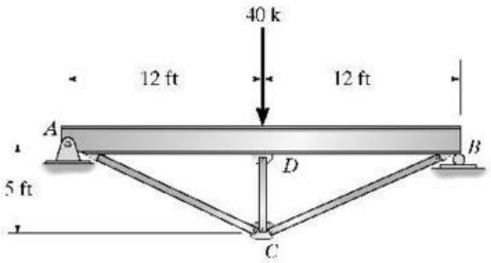

Compatibility equation

$$0 = \Delta_{CD} + F_{CD} f_{CDCD} \qquad (1)$$

Use virtual work method:

$$\Delta_{CD} = \int_0^L \frac{mM}{EI}dx = 2\int_0^{12} \frac{(0.5)(20x)x}{EI}dx = \frac{11520}{EI}$$

$$f_{CDCD} = \int_0^L \frac{mm}{EI}dx = 2\int_0^{12} \frac{(0.5x)^2}{EI}dx + \frac{2(1.3)^2(13)}{AE} + \frac{(1)^2(5)}{AE} = \frac{288.0}{EI} + \frac{48.94}{AE}$$

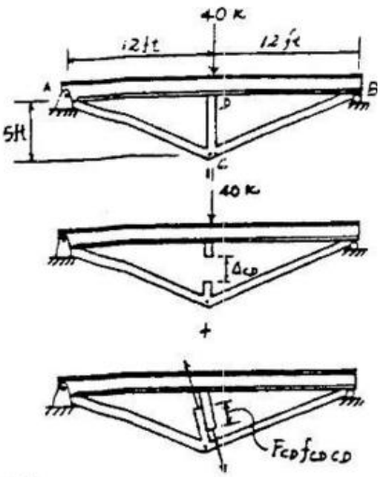

From Eq. 1

$$0 = \frac{11520(1728)}{E(400)} + \left(\frac{288.0(1728)}{E(400)} + \frac{48.94(12)}{2E}\right)F_{CD}$$

$$F_{CD} = -32.36\text{ k} = 32.4\text{ k (C)} \qquad \textbf{Ans}$$

Joint *C*:

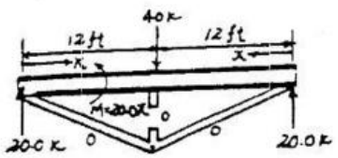

$$\overset{+}{\rightarrow} \Sigma F_x = 0; \quad F_{CA} = F_{CB}$$

$$+\uparrow \Sigma F_y = 0; \quad 2\left(\frac{5}{13}\right)F_{CA} - 32.36 = 0$$

$$F_{CA} = F_{CB} = 42.1\text{ k (T)} \qquad \textbf{Ans}$$

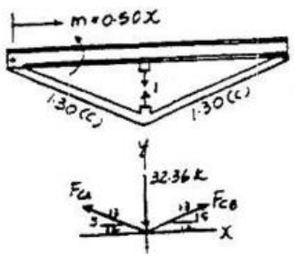

www.e-kitabi.com

c10.qxd 6/26/08 4:53 PM Page 294

© 2009 by R.C. Hibbeler. Published by Pearson Prentice Hall, Pearson Education, Inc., Upper Saddle River, NJ. All rights reserved. This material is protected under all copyright laws as they currently exist. No portion of this material may be reproduced, in any form or by any means, without permission in writing from the publisher.

10–38. Determine the maximum moment in the beam in Prob. 10–37.

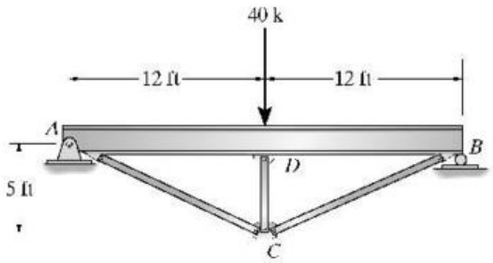

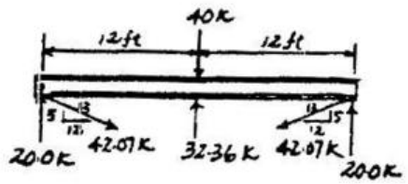

Compatibility equation

$$0 = \Delta_{CD} + F_{CD} f_{CDCD} \qquad (1)$$

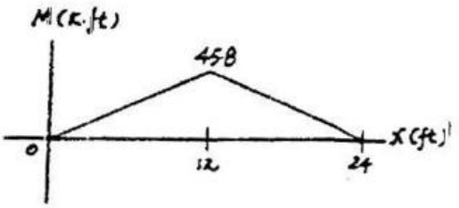

Use virtual work method

$$\Delta_{CD} = \int_0^L \frac{mM}{EI}dx = 2\int_0^{12} \frac{(0.5)(20x)x}{EI}dx = \frac{11520}{EI}$$

$$f_{CDCD} = \int_0^L \frac{mm}{EI}dx = 2\int_0^{12} \frac{(0.5x)^2}{EI}dx + \frac{2(1.3)^2(13)}{AE} + \frac{(1)^2(5)}{AE} = \frac{288.0}{EI} + \frac{48.94}{AE}$$

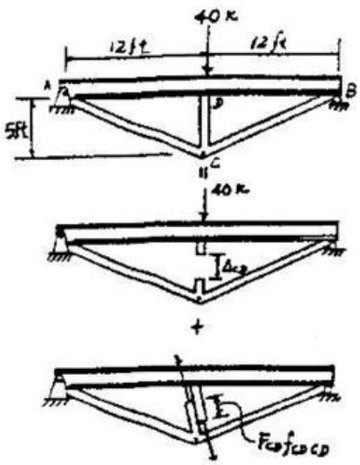

From Eq. 1

$$0 = \frac{11520(1728)}{E(400)} + \left(\frac{288.0(1728)}{E(400)} + \frac{48.94(12)}{2E}\right)F_{CD}$$

$$F_{CD} = -32.36\,\text{k} = 32.4\,\text{k (C)}$$

Joint *C*

$$\overset{+}{\rightarrow} \Sigma F_x = 0; \quad F_{CA} = F_{CB}$$

$$+\uparrow \Sigma F_y = 0; \quad 2\left(\frac{5}{13}\right)F_{CA} - 32.36 = 0$$

$$F_{CA} = F_{CB} = 42.07\,\text{k (T)}$$

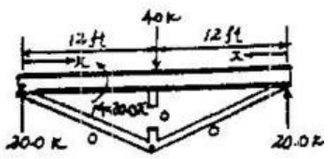

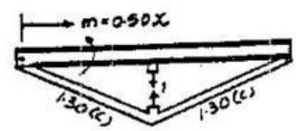

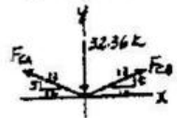

$$M_{max} = 45.8\,\text{k}\cdot\text{ft} \qquad \text{Ans}$$

www.e-kitabi.com

c10.qxd 6/26/08 4:53 PM Page 295

© 2009 by R.C. Hibbeler. Published by Pearson Prentice Hall, Pearson Education, Inc., Upper Saddle River, NJ. All rights reserved. This material is protected under all copyright laws as they currently exist. No portion of this material may be reproduced, in any form or by any means, without permission in writing from the publisher.

10–39. Determine the reactions at support C. EI is constant for both beams.

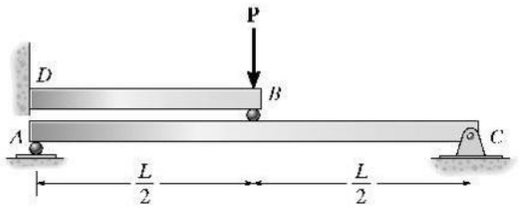

Support Reactions: FBD(a).

$$\overset{+}{\rightarrow}\Sigma F_x = 0; \qquad C_x = 0 \qquad \textbf{Ans}$$

$$\circlearrowleft +\Sigma M_A = 0; \qquad C_y(L) - B_y\left(\frac{L}{2}\right) = 0 \qquad [1]$$

Method of Superposition: Using the table in Appendix C, the required displacements are

$$v_B = \frac{PL^3}{48EI} = \frac{B_y L^3}{48EI} \downarrow$$

$$v_B' = \frac{PL_{BD}^3}{3EI} = \frac{P\left(\frac{L}{2}\right)^3}{3EI} = \frac{PL^3}{24EI} \downarrow$$

$$v_B'' = \frac{PL_{BD}^3}{3EI} = \frac{B_y L^3}{24EI} \uparrow$$

The compatibility condition requires

$$(+\downarrow) \qquad v_B = v_B' + v_B''$$

$$\frac{B_y L^3}{48EI} = \frac{PL^3}{24EI} + \left(-\frac{B_y L^3}{24EI}\right)$$

$$B_y = \frac{2P}{3}$$

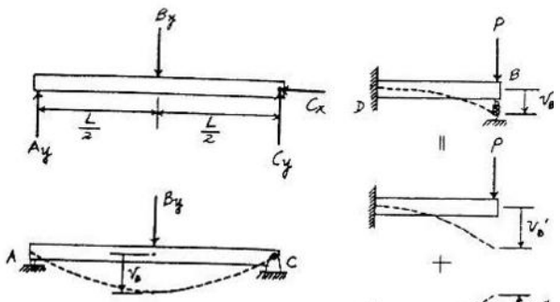

Substituting B_y into Eq. [1] yields,

$$C_y = \frac{P}{3} \qquad \textbf{Ans}$$

www.e-kitabi.com

c10.qxd 6/26/08 4:53 PM Page 296

© 2009 by R.C. Hibbeler. Published by Pearson Prentice Hall, Pearson Education, Inc., Upper Saddle River, NJ. All rights reserved. This material is protected under all copyright laws as they currently exist. No portion of this material may be reproduced, in any form or by any means, without permission in writing from the publisher.

***10–40.** The cantilevered beam AB is additionally supported using two tie rods. Determine the force in each of these rods. Neglect axial compression and shear in the beam. For the beam, $I_b = 200(10^6)\ \text{mm}^4$, and for each tie rod, $A = 100\ \text{mm}^2$. Take $E = 200\ \text{GPa}$.

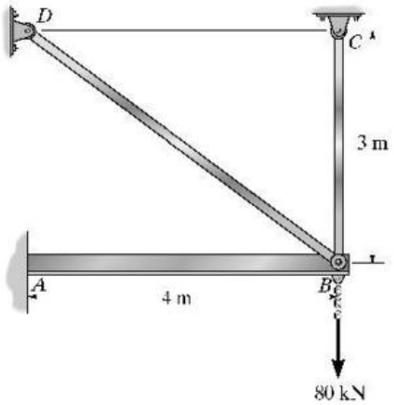

Compatibility equations

$$\Delta_{DB} + F_{DB}f_{DBDB} + F_{CB}f_{DBCB} = 0 \qquad (1)$$

$$\Delta_{CB} + F_{DB}f_{CBDB} + F_{CB}f_{CBCB} = 0 \qquad (2)$$

Use virtual work method

$$\Delta_{DB} = \int_0^L \frac{mM}{EI}dx = \int_0^4 \frac{(0.6x)(-80x)}{EI}dx = -\frac{1024}{EI}$$

$$\Delta_{CB} = \int_0^L \frac{mM}{EI}dx = \int_0^4 \frac{(1x)(-80x)}{EI}dx = -\frac{1706.67}{EI}$$

$$f_{CBCB} = \int_0^L \frac{mm}{EI}dx + \Sigma\frac{nnL}{AE} = \int_0^4 \frac{(1x)^2}{EI}dx + \frac{(1)^2(3)}{AE} = \frac{21.33}{EI} + \frac{3}{AE}$$

$$f_{DBDB} = \int_0^L \frac{mm}{EI}dx + \Sigma\frac{nnL}{AE} = \int_0^4 \frac{(0.6x)^2}{EI}dx + \frac{(1)^2(5)}{AE} = \frac{7.68}{EI} + \frac{5}{AE}$$

$$f_{DBCB} = \int_0^4 \frac{(0.6x)(1x)}{EI} = \frac{12.8}{EI}$$

From Eq. 1:

$$\frac{-1024}{E(200)(10^{-6})} + F_{DB}\left[\frac{7.68}{E(200)(10^{-6})} + \frac{5}{E(100)(10^{-6})}\right] + F_{CB}\frac{12.8}{E(200)(10^{-6})} = 0$$

$$0.0884F_{DB} + 0.064F_{CB} = 5.12$$

From Eq. 2:

$$-\frac{1706.67}{E(200)(10^{-6})} + F_{DB}\frac{12.8}{E(200)(10^{-6})} + F_{CB}\left[\frac{21.33}{E(200)(10^{-6})} + \frac{3}{E(100)(10^{-6})}\right] = 0$$

$$0.064F_{DB} + 0.13667F_{CB} = 8.533$$

Solving

$$F_{DB} = 19.24\ \text{kN} = 19.2\ \text{kN} \qquad \text{Ans}$$

$$F_{CB} = 53.43\ \text{kN} = 53.4\ \text{kN} \qquad \text{Ans}$$

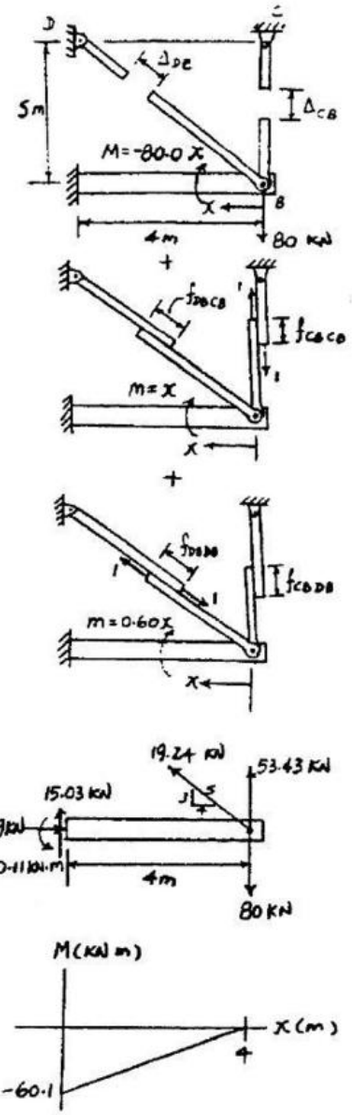

www.e-kitabi.com

c10.qxd 6/26/08 4:53 PM Page 297

© 2009 by R.C. Hibbeler. Published by Pearson Prentice Hall, Pearson Education, Inc., Upper Saddle River, NJ. All rights reserved. This material is protected under all copyright laws as they currently exist. No portion of this material may be reproduced, in any form or by any means, without permission in writing from the publisher.

10–41. Draw the influence line for the shear at C. Plot numerical values every 5 ft. Assume the support at B is a roller. EI is constant.

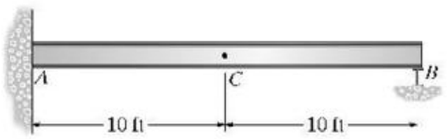

$x = 0$

$$\Delta_0 = M_0' = 0$$

$x = 5$ ft

$$\Delta_5 = M_5' = \frac{200.0}{EI}(15) - \frac{112.5}{EI}(5) - \frac{2666.67}{EI} = \frac{-229.17}{EI}$$

$x = 10$ ft

$$\Delta_{10^-} = M_{10^-}' = \frac{200}{EI}(10) - \frac{2666.67}{EI} - \frac{50.0}{EI}3.333 = -\frac{833.33}{EI}$$

$x = 10^+$ ft

$$\Delta_{10^+} = M_{10^+}' = \frac{200.0}{EI}(10) - \frac{50.0}{EI}3.333 = \frac{1833.33}{EI}$$

$x = 15$ ft

$$\Delta_{15} = M_{15}' = \frac{200.0}{EI}(5) - \frac{12.5}{EI}1.667 = \frac{979.17}{EI}$$

$x = 20$

$$\Delta_{20} = M_{20}' = 0$$

x	Δ_i / M_C'
0	0
5	−0.0859
10^-	−0.3125
10^+	0.688
15	0.367
20	0

At C: -0.313 k Ans

0.688 k Ans

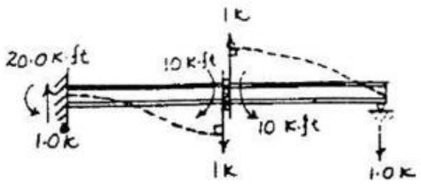

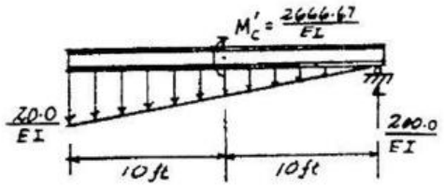

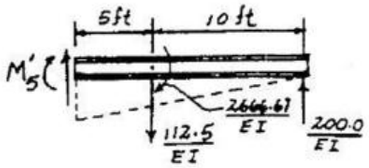

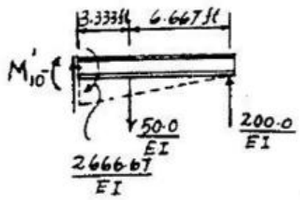

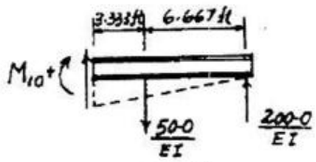

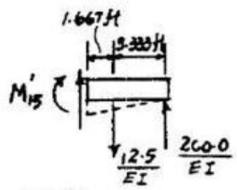

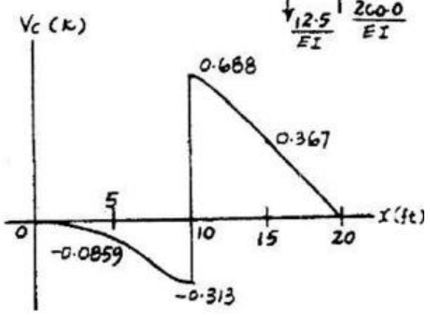

www.e-kitabi.com

c10.qxd 6/26/08 4:53 PM Page 298

© 2009 by R.C. Hibbeler. Published by Pearson Prentice Hall, Pearson Education, Inc., Upper Saddle River, NJ. All rights reserved. This material is protected under all copyright laws as they currently exist. No portion of this material may be reproduced, in any form or by any means, without permission in writing from the publisher.

10–42. Draw the influence line for the reaction at C. Plot the numerical values every 5 ft. EI is constant.

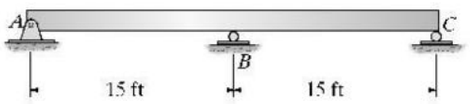

$x = 0$ ft

$$\Delta_0 = M_0' = 0$$

$x = 5$ ft

$$\Delta_5 = M_5' = \frac{12.5}{EI}1.667 - \frac{37.5}{EI}(5) = \frac{-166.67}{EI}$$

$x = 10$ ft

$$\Delta_{10} = M_{10}' = \frac{50}{EI}3.333 - \frac{37.5}{EI}(10) = -\frac{208.33}{EI}$$

$x = 15$ ft

$$\Delta_{15} = M_{15}' = 0$$

$x = 20$ ft

$$\Delta_{20} = M_{20}' = \frac{2250}{EI} + \frac{50}{EI}3.333 - \frac{187.5}{EI}(10) = \frac{541.67}{EI}$$

$x = 25$ ft

$$\Delta_{25} = M_{25}' = \frac{2250}{EI} + \frac{12.5}{EI}1.667 - \frac{187.5}{EI}(5) = \frac{1333.33}{EI}$$

$x = 30$ ft

$$\Delta_{30} = M_{30}' = \frac{2250}{EI}$$

x	Δ_i/Δ_{30}
0	0
5	−0.0741
10	−0.0926
15	0
20	0.241
25	0.593
30	1.0

At 20 ft: $C_y = 0.241$ k Ans

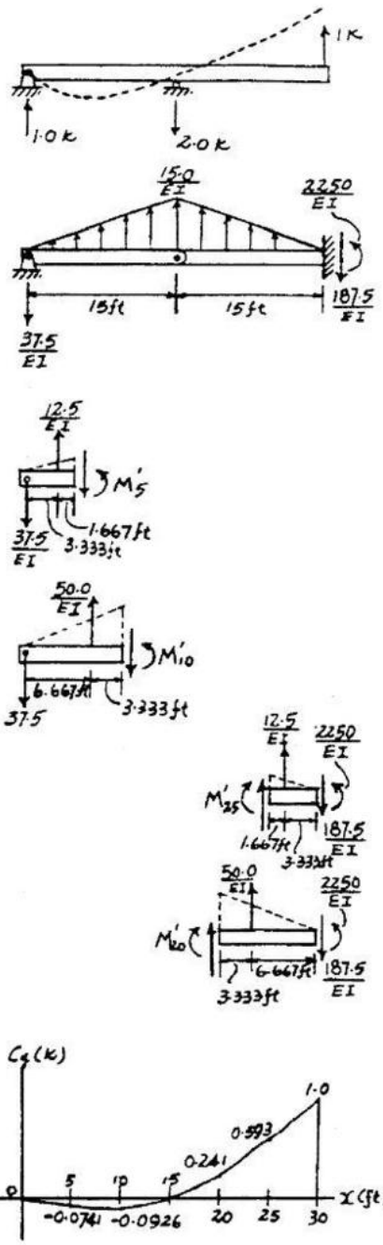

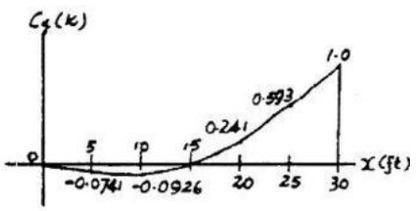

www.e-kitabi.com

c10.qxd 6/26/08 4:53 PM Page 299

© 2009 by R.C. Hibbeler. Published by Pearson Prentice Hall, Pearson Education, Inc., Upper Saddle River, NJ. All rights reserved. This material is protected under all copyright laws as they currently exist. No portion of this material may be reproduced, in any form or by any means, without permission in writing from the publisher.

10–43. Draw the influence line for the shear at point B. Plot numerical values every 5 ft. Assume the support at A is a roller and C is fixed. EI is constant.

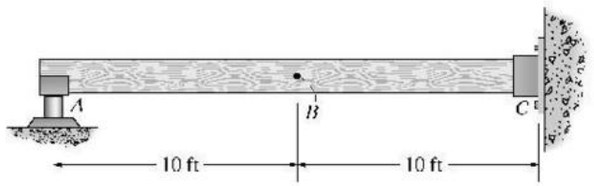

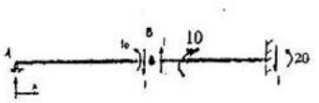

$\left(+\Sigma M_A = 0;\right)$ $\quad M' = \frac{200}{EI}(20)\left(\frac{2}{3}\right) = \frac{2666.67}{EI}$

At $x = 5$,

$$\Delta_5 = M_5 = \frac{12.5}{EI}\left(\frac{5}{3}\right) - \frac{100}{EI}(5) = -\frac{479.167}{EI}$$

At $x = 10^-$,

$$\Delta_{10^-} = M_{10^-} = \frac{50}{EI}\left(\frac{10}{3}\right) - \frac{100}{EI}(10) = -\frac{833.33}{EI}$$

At $x = 10^+$,

$$\Delta_{10^+} = M_{10^+} = \frac{1166.6}{EI} + \frac{50}{EI}\left(\frac{10}{3}\right) - \frac{100}{EI}(10) = \frac{333.33}{EI}$$

At $x = 15$,

$$\Delta_{15} = M_{15} = -\frac{100}{EI}(15) + \frac{50}{EI}\left(5 + \frac{10}{3}\right) + \frac{12.5}{EI}\left(\frac{5}{3}\right) + \frac{1166.6}{EI} = \frac{104.167}{EI}$$

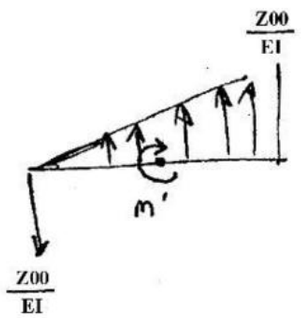

x	Δ	Influence line Ordinate
0	0	0
5	$-\frac{479.167}{EI}$	−0.411
10^-	$\frac{83.33}{EI}$	−0.714
10^+	$\frac{333.33}{EI}$	0.286
15	$\frac{104.167}{EI}$	0.0893
20	0	0

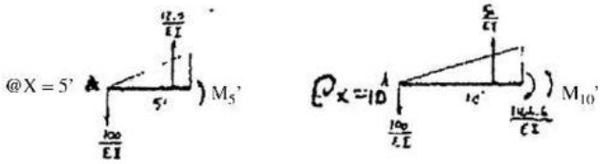

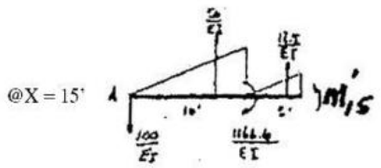

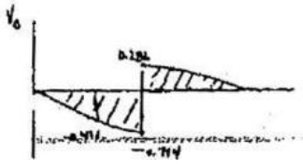

$A + B$: − 0.714 K Ans

0.714 K Ans

www.e-kitabi.com

© 2009 by R.C. Hibbeler. Published by Pearson Prentice Hall, Pearson Education, Inc., Upper Saddle River, NJ. All rights reserved. This material is protected under all copyright laws as they currently exist. No portion of this material may be reproduced, in any form or by any means, without permission in writing from the publisher.

***10–44.** Draw the influence line for the reaction at point A. Plot numerical values every 5 ft. Assume the support at A is a roller and C is fixed. EI is constant.

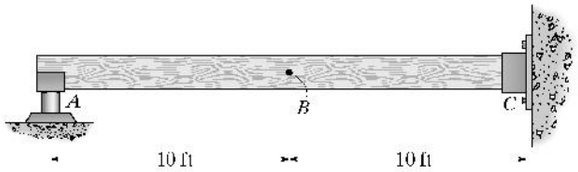

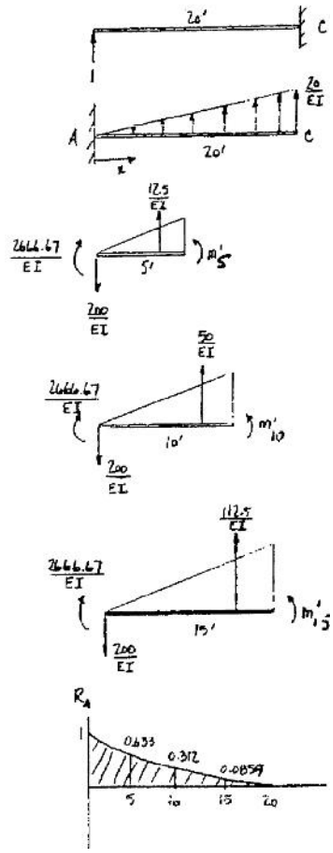

At $x = 5$,

$$\Delta_5 = M'_5 = \frac{2666.67}{EI} - \frac{200}{EI}(5) + \frac{12.5}{EI}\left(\frac{5}{3}\right) = \frac{1687.5}{EI}$$

At $x = 10$,

$$\Delta_{10} = M'_{10} = \frac{2666.67}{EI} - \frac{200}{EI}(10) + \frac{50}{EI}\left(\frac{10}{3}\right) - \frac{833.33}{EI}$$

At $x = 15$,

$$\Delta_{15} = M'_{15} = \frac{2666.67}{EI} - \frac{200}{EI}(15) + \frac{112.5}{EI}\left(\frac{15}{3}\right) = \frac{229.17}{EI}$$

x	Δ	
0	$\frac{2666.67}{EI}$	1
5	$\frac{1687.5}{EI}$	0.633
10	$\frac{833.33}{EI}$	0.312
15	$\frac{229.17}{EI}$	0.0859
20	0	0

10–45. Sketch the influence line for the moment at D using the Müller-Breslau principle. Determine the maximum positive moment at D due to a uniform live load of 5 kN/m. EI is constant. Assume A is a pin and B and C are rollers.

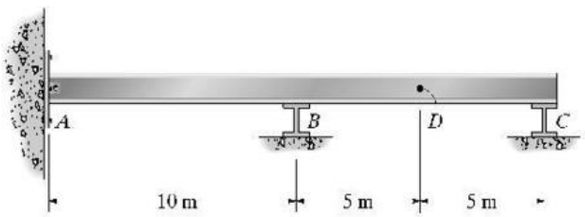

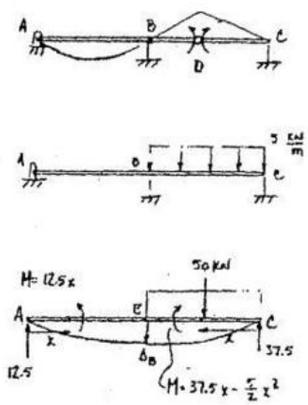

$$\Delta_B = \int_0^L \frac{mM}{EI}\,dx = \int_0^{10} \frac{(0.5x)(12.5x)\,dx}{EI} + \int_0^{10} \frac{(0.5x)(37.5x - \frac{5}{2}x^2)\,dx}{EI} = \frac{5208.3}{EI}$$

$$f_{BB} = \int_0^L \frac{m^2}{EI}\,dx = 2\int_0^{10} \frac{(0.5x)^2\,dx}{EI} = \frac{166.7}{EI}$$

$$+\downarrow \Delta_B + B_y f_{BB} = 0$$

$$\frac{5208.3}{EI} + B_y\left(\frac{166.7}{EI}\right) = 0$$

$$B_y = -31.25\ \text{kN}$$

$$\left(+\circlearrowleft \Sigma M_A = 0;\quad -31.25(10) + 50(15) - C_y(20) = 0\right)$$

$$C_y = 21.875\ \text{kN}$$

$$+\uparrow \Sigma F_y = 0;\quad 31.25 - 50 + 21.875 - A_y = 0$$

$$A_y = 3.125\ \text{kN}$$

$$\left(+\circlearrowleft \Sigma M_D = 0;\quad M_D + 25(2.5) - 21.875(5) = 0\right)$$

$$M_D = 46.9\ \text{kN}\cdot\text{m} \qquad \text{Ans}$$

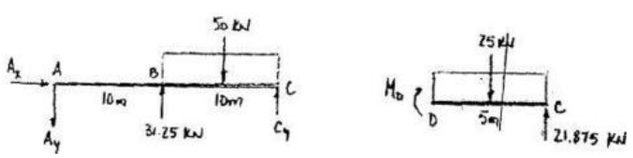

www.e-kitabi.com

c10.qxd 6/26/08 4:53 PM Page 301

© 2009 by R.C. Hibbeler. Published by Pearson Prentice Hall, Pearson Education, Inc., Upper Saddle River, NJ. All rights reserved. This material is protected under all copyright laws as they currently exist. No portion of this material may be reproduced, in any form or by any means, without permission in writing from the publisher.

10–46. Sketch the influence line for the shear at B. If a uniform live load of 6 kN/m is placed on the beam, determine the maximum positive shear at B. Assume the beam is pinned at A. EI is constant.

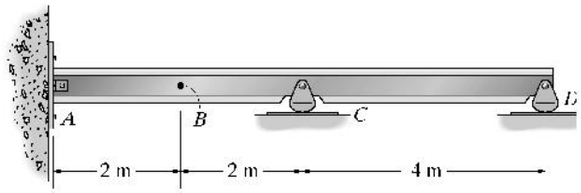

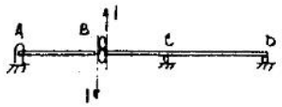

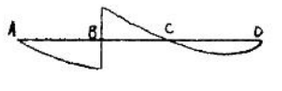

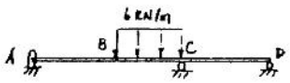

$$\Delta_A = \int_0^L \frac{mM}{EI}dx = 0 + \int_2^4 \frac{(-1x)(-3x^2+12x-12)}{EI}dx + \int_0^4 \frac{(-1x)(-3x)}{EI}dx = \frac{92}{EI}$$

$$f_{AA} = \int_0^L \frac{m^2}{EI}dx = \int_0^2 \frac{(-1x)^2dx}{EI} + \int_2^4 \frac{(-1x)^2dx}{EI} + \int_0^4 \frac{(-1x)^2}{EI}dx = \frac{42.67}{EI}$$

$$\Delta_A + A_y f_{AA} = 0$$

$$\frac{92}{EI} + A_y\left(\frac{42.67}{EI}\right) = 0$$

$$A_y = -2.16\ \text{kN}$$

$$+\uparrow \Sigma F_y = 0; \quad V_B - 2.16 = 0$$

$$(V_B)_{max} = V_B = 2.16\ \text{kN} \qquad \textbf{Ans}$$

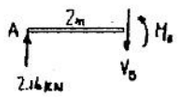

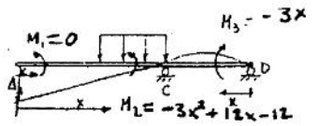

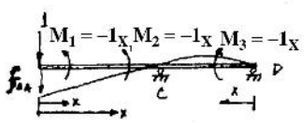

10–47. Sketch the influence line for the moment at B. If a uniform live load of 6 kN/m is placed on the beam, determine the maximum positive moment at B. Assume the beam is pinned at A. EI is constant.

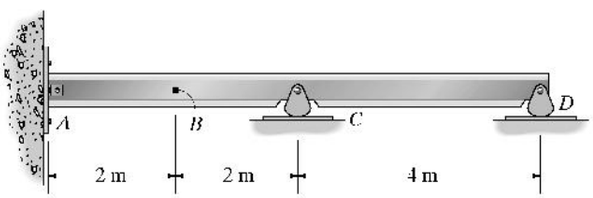

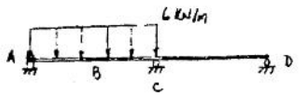

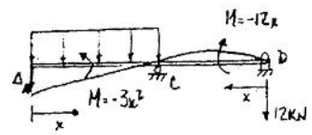

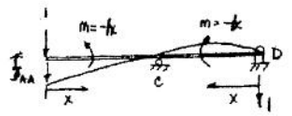

$$\Delta_A = \int_0^L \frac{mM}{EI}dx = \int_0^4 \frac{(-1x)(-3x^2)dx}{EI} + \int_0^4 \frac{(-1x)(-12x)dx}{EI} = \frac{448}{EI}$$

$$f_{AA} = \int_0^L \frac{m^2}{EI}dx = \int_0^4 \frac{(-1x)^2}{EI}dx + \int_0^4 \frac{(-1x)^2}{EI}dx = \frac{42.67}{EI}$$

$$\Delta_A + A_y f_{AA} = 0$$

$$\frac{448}{EI} + A_y\left(\frac{42.67}{EI}\right) = 0$$

$$A_y = -10.50\ \text{kN}$$

$$+\circlearrowleft \Sigma M_B = 0; \quad M_B + 6(2)(1) - 10.5(2) = 0$$

$$(M_B)_{max} = M_B = 9.00\ \text{kN}\cdot\text{m} \qquad \textbf{Ans}$$

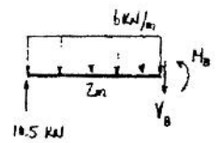

www.e-kitabi.com

c10.qxd 6/26/08 4:53 PM Page 302

© 2009 by R.C. Hibbeler. Published by Pearson Prentice Hall, Pearson Education, Inc., Upper Saddle River, NJ. All rights reserved. This material is protected under all copyright laws as they currently exist. No portion of this material may be reproduced, in any form or by any means, without permission in writing from the publisher.

***10–48.** Sketch the influence line for (a) the vertical reaction at C, (b) the moment at B, and (c) the shear at E. In each case, indicate on a sketch of the beam where a uniform distributed live load should be placed so as to cause a maximum positive value of these functions. Assume the beam is fixed at F.

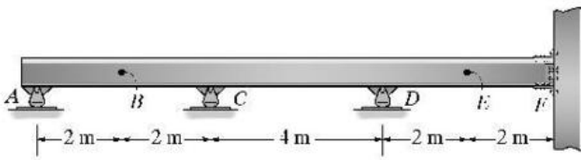

(a)

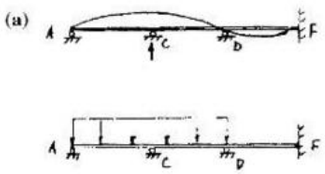

(b)

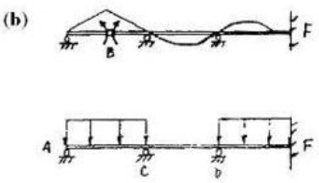

(c)

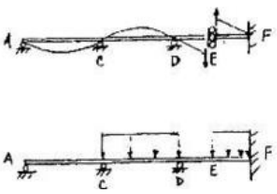

10–49. Use the Müller-Breslau principle to sketch the general shape of the influence line for (a) the moment at A, and (b) the shear at B.

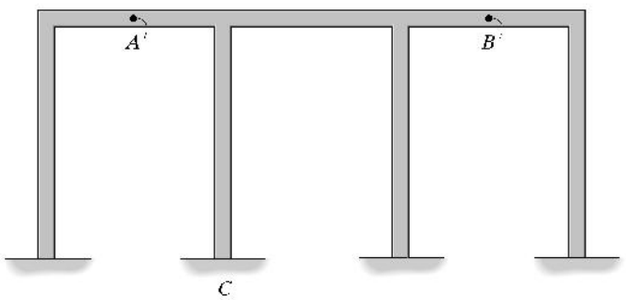

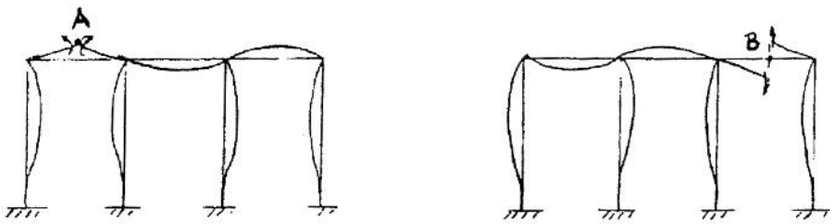

(a) (b)

www.e-kitabi.com

c10.qxd 6/26/08 4:54 PM Page 303

© 2009 by R.C. Hibbeler. Published by Pearson Prentice Hall, Pearson Education, Inc., Upper Saddle River, NJ. All rights reserved. This material is protected under all copyright laws as they currently exist. No portion of this material may be reproduced, in any form or by any means, without permission in writing from the publisher.

10–50. Use the Müller-Breslau principle to sketch the general shape of the influence line for (a) the moment at A and (b) the shear at B.

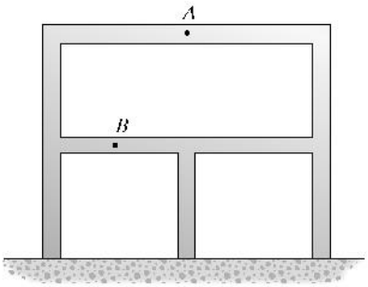

(a)

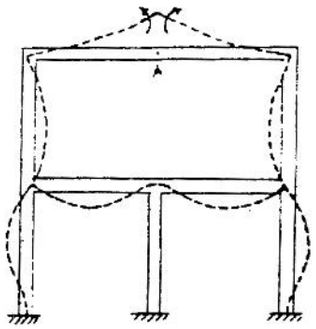

(b)

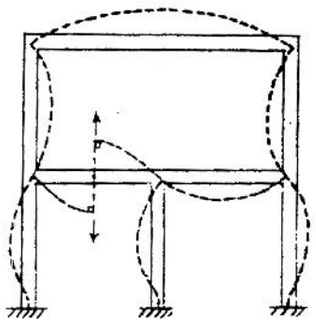

10–51. Use the Müller-Breslau principle to sketch the general shape of the influence line for (a) the moment at A and (b) the shear at B.

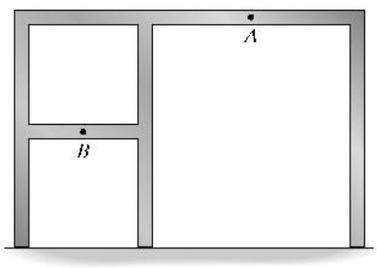

(a)

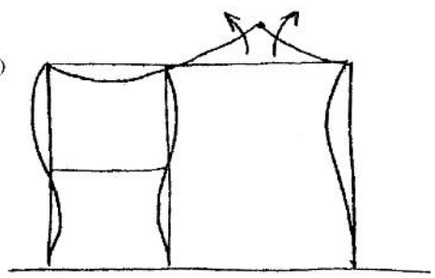

(b)

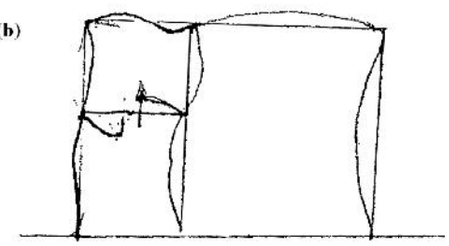

www.e-kitabi.com

c10.qxd 6/26/08 4:54 PM Page 304

© 2009 by R.C. Hibbeler. Published by Pearson Prentice Hall, Pearson Education, Inc., Upper Saddle River, NJ. All rights reserved. This material is protected under all copyright laws as they currently exist. No portion of this material may be reproduced, in any form or by any means, without permission in writing from the publisher.

***10–52.** Use the Müller-Breslau principle to sketch the general shape of the influence line for (a) and the moment at A and (b) the shear at B.

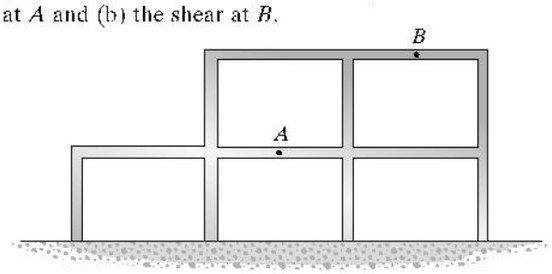

(a)

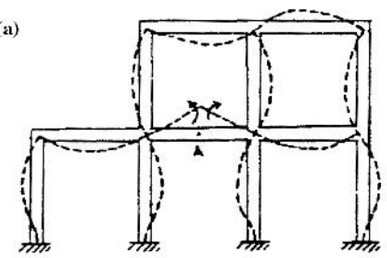

(b)

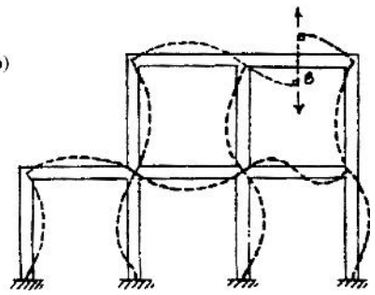

10–53. Use the Müller-Breslau principle to sketch the general shape of the influence line for (a) the moment at A and (b) the shear at B.

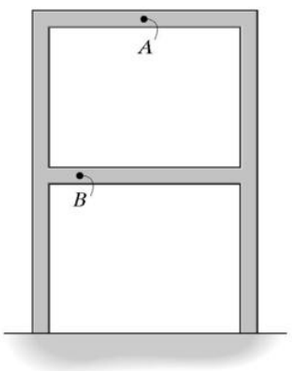

(a)

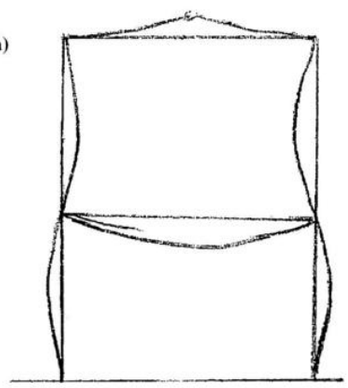

(b)

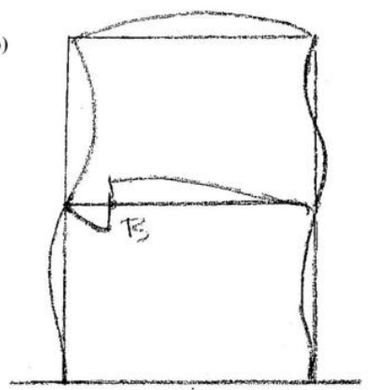

www.e-kitabi.com

c10.qxd 6/26/08 4:54 PM Page 305

© 2009 by R.C. Hibbeler. Published by Pearson Prentice Hall, Pearson Education, Inc., Upper Saddle River, NJ. All rights reserved. This material is protected under all copyright laws as they currently exist. No portion of this material may be reproduced, in any form or by any means, without permission in writing from the publisher.

10–54. Use the Müller-Breslau principle to sketch the general shape of the influence line for (a) the moment at A and (b) the shear at B.

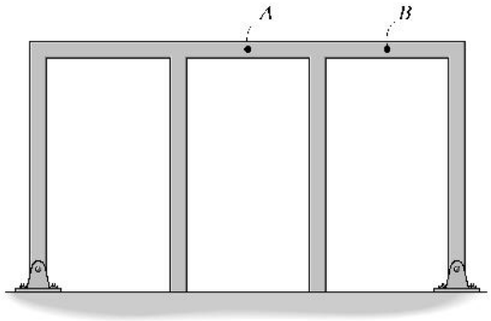

(a)

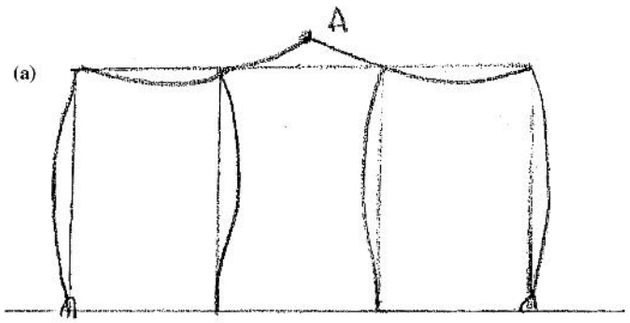

(b)

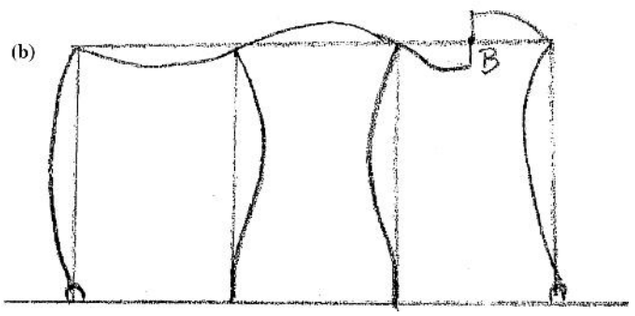

www.e-kitabi.com

c11.qxd 6/24/08 4:34 PM Page 307

© 2009 by R.C. Hibbeler. Published by Pearson Prentice Hall, Pearson Education, Inc., Upper Saddle River, NJ. All rights reserved. This material is protected under all copyright laws as they currently exist. No portion of this material may be reproduced, in any form or by any means, without permission in writing from the publisher.

11–1. Determine the moments at the supports A and C, then draw the moment diagram. Assume joint B is a roller. EI is constant.

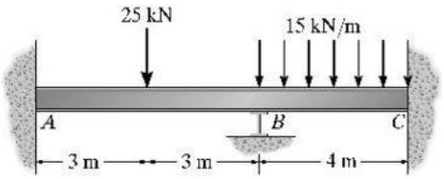

$$M_N = 2E\left(\frac{I}{L}\right)(2\theta_N + \theta_F - 3\psi) + (\text{FEM})_N$$

$$M_{AB} = \frac{2EI}{6}(0 + \theta_B) - \frac{(25)(6)}{8}$$

$$M_{BA} = \frac{2EI}{6}(2\theta_B) + \frac{(25)(6)}{8}$$

$$M_{BC} = \frac{2EI}{4}(2\theta_B) - \frac{(15)(4)^2}{12}$$

$$M_{CB} = \frac{2EI}{4}(\theta_B) + \frac{15(4)^2}{12}$$

Equilibrium

$$M_{BA} + M_{BC} = 0$$

$$\frac{2EI}{6}(2\theta_B) + \frac{25(6)}{8} + \frac{2EI}{4}(2\theta_B) - \frac{15(4)^2}{12} = 0$$

$$\theta_B = \frac{0.75}{EI}$$

$M_{AB} = -18.5 \text{ kN}\cdot\text{m}$ **Ans**

$M_{CB} = 20.375 \text{ kN}\cdot\text{m} = 20.4 \text{ kN}\cdot\text{m}$ **Ans**

$M_{BA} = 19.25 \text{ kN}\cdot\text{m}$ **Ans**

$M_{BC} = -19.25 \text{ kN}\cdot\text{m}$ **Ans**

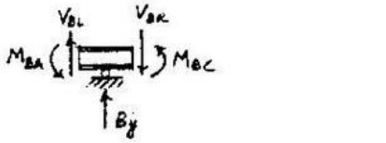

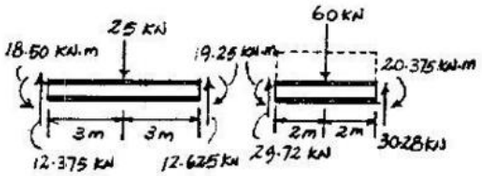

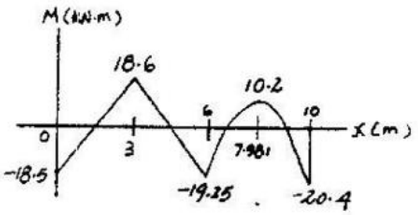

11–2. Determine the moments at A and B, then draw the moment diagram for the beam. EI is constant.

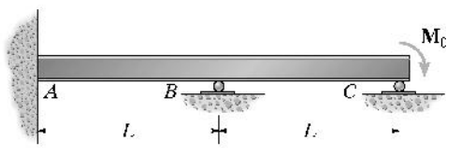

$$M_{AB} = \frac{2EI}{L}(0 + \theta_B - 0) + 0 = \frac{2}{L}EI\theta_B$$

$$M_{BA} = \frac{2EI}{L}(2\theta_B + 0 - 0) + 0 = \frac{4}{L}EI\theta_B$$

$$M_{BC} = \frac{2EI}{L}(2\theta_B + \theta_C - 0) + 0 = \frac{4}{L}EI\theta_B + \frac{2}{L}EI\theta_C$$

$$M_{CB} = \frac{2EI}{L}(2\theta_C + \theta_B - 0) + 0 = \frac{4}{L}EI\theta_C + \frac{2}{L}EI\theta_B - M_D$$

$$\Sigma M_B = 0;$$

$$M_{BA} + M_{BC} = 0$$

Solving

$$\theta_B = -\frac{M_0 L}{14EI} \qquad \theta_C = \frac{2M_0 L}{7EI}$$

$M_{BC} = \frac{2}{7}M_0$ **Ans**

$M_{AB} = -\frac{1}{7}M_0$ **Ans**

$M_{BA} = -\frac{2}{7}M_0$ **Ans**

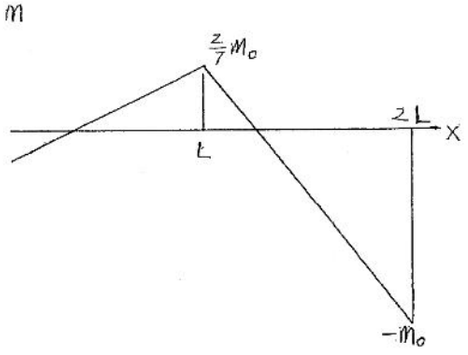

www.e-kitabi.com

c11.qxd 6/24/08 4:34 PM Page 308

© 2009 by R.C. Hibbeler. Published by Pearson Prentice Hall, Pearson Education, Inc., Upper Saddle River, NJ. All rights reserved. This material is protected under all copyright laws as they currently exist. No portion of this material may be reproduced, in any form or by any means, without permission in writing from the publisher.

11–3. Determine the moments at A and B, then draw the moment diagram for the beam. EI is constant.

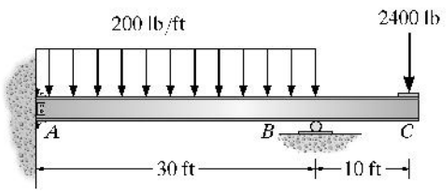

$$\text{FEM}_{AB} = \frac{1}{12}(w)(L^2) = \frac{1}{12}(200)(30^2) = 15 \text{ k·ft}$$

$$M_{AB} = \frac{2EI}{30}(0 + \theta_B - 0) - 15$$

$$M_{BA} = \frac{2EI}{30}(2\theta_B + 0 - 0) + 15$$

$$\Sigma M_B = 0; \qquad M_{BA} + 2400\,(10)$$

Solving,

$$\theta_B = \frac{67.5}{EI}$$

$M_{AB} = -10.5$ k·ft **Ans**

$M_{BA} = 24$ k·ft **Ans**

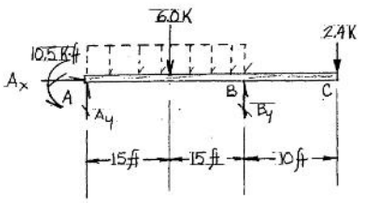

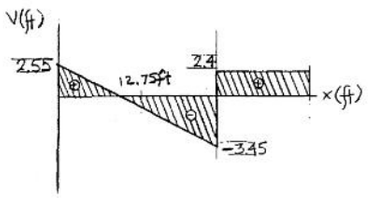

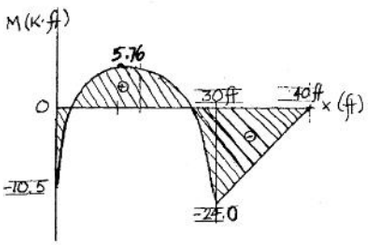

www.e-kitabi.com

c11.qxd 6/24/08 4:34 PM Page 309

© 2009 by R.C. Hibbeler. Published by Pearson Prentice Hall, Pearson Education, Inc., Upper Saddle River, NJ. All rights reserved. This material is protected under all copyright laws as they currently exist. No portion of this material may be reproduced, in any form or by any means, without permission in writing from the publisher.

***11–4.** Determine the moments at B and C, then draw the moment diagram. Assume A, B, and C are rollers and D is pinned. EI is constant.

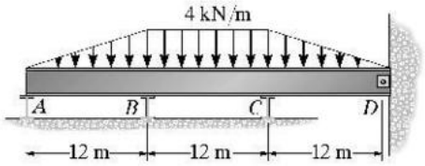

$$M_N = 3E(\frac{I}{L})(\theta_N - \psi) + (\text{FEM})_N$$

$$M_{BA} = \frac{3EI}{12}(\theta_B) + \frac{(4)(12)^2}{15}$$

$$M_N = 2E(\frac{I}{L})(2\theta_N + \theta_F - 3\psi) + (\text{FEM})_N$$

$$M_{BC} = \frac{2EI}{12}(2\theta_B + \theta_C) - \frac{(4)(12)^2}{12}$$

$$M_{CB} = \frac{2EI}{12}(2\theta_C + \theta_B) + \frac{4(12)^2}{12}$$

$$M_N = 3E(\frac{I}{L})(\theta_N - \psi) + (\text{FEM})_N$$

$$M_{CD} = \frac{3EI}{12}(\theta_C) - \frac{4(12)^2}{15}$$

Equilibrium

$$M_{BA} + M_{BC} = 0$$

$$M_{CB} + M_{CD} = 0$$

$$\frac{3EI}{12}(\theta_B) + \frac{(4)(12)^2}{15} + \frac{2EI}{12}(2\theta_B + \theta_C) - \frac{4(12)^2}{12} = 0$$

$$0.5833\theta_B + 0.1667\theta_C = 9.60$$

$$\frac{2EI}{12}(2\theta_C + \theta_B) + \frac{4(12)^2}{12} + \frac{3EI}{12}(\theta_C) - \frac{4(12)^2}{15} = 0$$

$$0.5833\theta_C + 0.1667\theta_B = -9.60$$

Solving

$$\theta_B = -\theta_C = \frac{23.40}{EI}$$

$M_{BA} = 44.2$ k·ft **Ans**

$M_{BC} = -44.2$ k·ft **Ans**

$M_{CB} = 44.2$ k·ft **Ans**

$M_{CD} = -44.2$ k·ft **Ans**

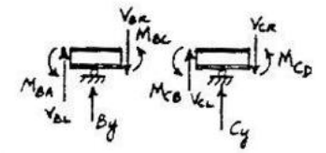

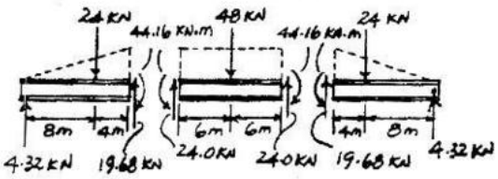

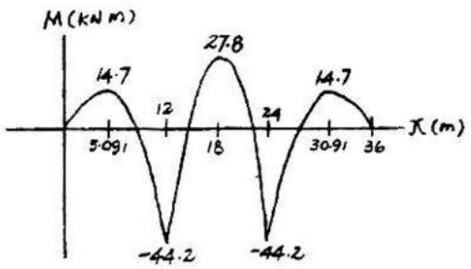

www.e-kitabi.com

c11.qxd 6/24/08 4:34 PM Page 310

© 2009 by R.C. Hibbeler. Published by Pearson Prentice Hall, Pearson Education, Inc., Upper Saddle River, NJ. All rights reserved. This material is protected under all copyright laws as they currently exist. No portion of this material may be reproduced, in any form or by any means, without permission in writing from the publisher.

11–5. Determine the moment at B, then draw the moment diagram for the beam. Assume the supports at A and C are fixed. EI is constant.

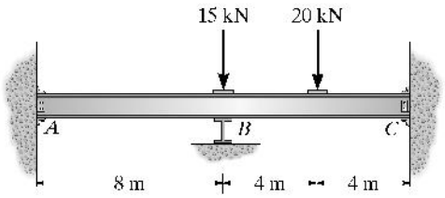

$$M_{AB} = \frac{2EI}{8}(0 + \theta_B - 0) + 0 = \frac{EI}{4}\theta_B$$

$$M_{BA} = \frac{2EI}{8}(2\theta_B + 0 - 0) + 0 = \frac{EI}{2}\theta_B$$

$$M_{BC} = \frac{2EI}{8}(2\theta_B + 0 - 0) - 20 = \frac{EI}{2}\theta_B - 20$$

$$M_{CB} = \frac{2EI}{8}(0 + \theta_B - 0) + 20 = \frac{EI}{4}\theta_B + 20$$

$$M_{BA} + M_{BC} = 0$$

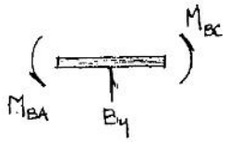

Solving

$$\theta_B = \frac{20}{EI}$$

$M_{AB} = 5 \text{ kN}\cdot\text{m}$ **Ans**

$M_{BA} = 10 \text{ kN}\cdot\text{m}$ **Ans**

$M_{BC} = -10 \text{ kN}\cdot\text{m}$ **Ans**

$M_{CB} = 25 \text{ kN}\cdot\text{m}$ **Ans**

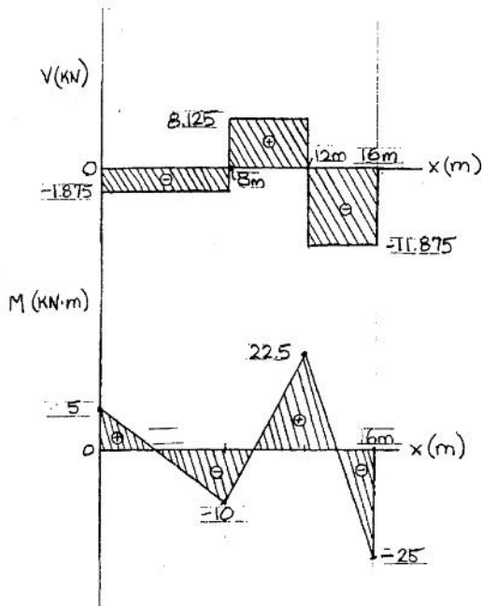

www.e-kitabi.com

c11.qxd 6/24/08 4:34 PM Page 311

© 2009 by R.C. Hibbeler. Published by Pearson Prentice Hall, Pearson Education, Inc., Upper Saddle River, NJ. All rights reserved. This material is protected under all copyright laws as they currently exist. No portion of this material may be reproduced, in any form or by any means, without permission in writing from the publisher.

11–6. Determine the internal moments at the supports A, B, and C, then draw the moment diagram. Assume A is pinned, and B and C are rollers. EI is constant.

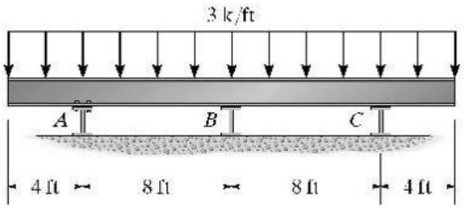

$$M_N = 2E\left(\frac{I}{L}\right)(2\theta_N + \theta_F - 3\psi) + (\text{FEM})_N$$

$$M_{AB} = \frac{2EI}{8}(2\theta_A + \theta_B) - \frac{3(8)^2}{12}$$

$$M_{BA} = \frac{2EI}{8}(2\theta_B + \theta_A) + \frac{3(8)^2}{12}$$

$$M_{BC} = \frac{2EI}{8}(2\theta_B + \theta_C) - \frac{3(8)^2}{12}$$

$$M_{CB} = \frac{2EI}{8}(2\theta_C + \theta_B) + \frac{3(8)^2}{12}$$

Equilibrium

$$M_{AB} + 24 = 0$$

$$M_{BA} + M_{BC} = 0$$

$$M_{CB} - 24 = 0$$

$$\frac{2EI}{8}(2\theta_A + \theta_B) - \frac{3(8)^2}{12} + 24 = 0$$

$$0.5\theta_A + 0.25\theta_B = -\frac{8}{EI}$$

$$\frac{2EI}{8}(2\theta_B + \theta_A) + \frac{3(8)^2}{12} + \frac{2EI}{8}(2\theta_B + \theta_C) - \frac{3(8)^2}{12} = 0$$

$$\theta_B + 0.25\theta_A + 0.25\theta_C = 0$$

$$\frac{2EI}{8}(2\theta_C + \theta_B) + \frac{3(8)^2}{12} - 24 = 0$$

$$0.5\theta_C + 0.25\theta_B = \frac{8}{EI}$$

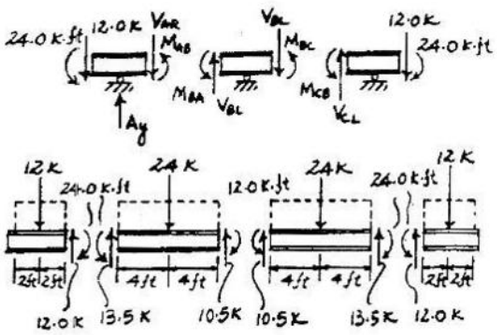

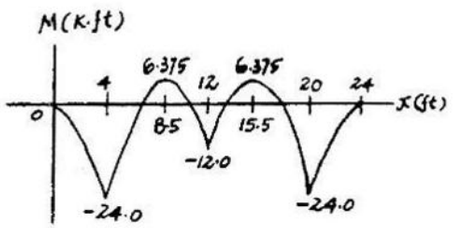

Solving

$$\theta_B = 0$$

$$\theta_A = -\theta_C = -\frac{16}{EI}$$

$M_{AB} = -24$ k·ft Ans

$M_{BA} = 12$ k·ft Ans

$M_{BC} = -12$ k·ft Ans

$M_{CB} = 24$ k·ft Ans

www.e-kitabi.com

c11.qxd 6/24/08 4:34 PM Page 312

© 2009 by R.C. Hibbeler. Published by Pearson Prentice Hall, Pearson Education, Inc., Upper Saddle River, NJ. All rights reserved. This material is protected under all copyright laws as they currently exist. No portion of this material may be reproduced, in any form or by any means, without permission in writing from the publisher.

11–7. Determine the reactions at A, B, and C, then draw the moment diagram for the beam. Assume the support at A is pinned.

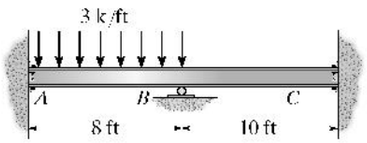

$$\text{FEM}_{BA} = \frac{wL^2}{8} = \frac{3(8)^2}{8} = 24 \text{ k·ft}$$

$$\text{FEM}_{BC} = 0$$

$$M_{BA} = \frac{3EI}{8}(\theta_B - 0) + 24$$

$$M_{BC} = \frac{3EI}{10}(\theta_B - 0) + 0$$

$$M_{BA} + M_{BC} = 0$$

Solving

$$\theta_B = -\frac{320}{9EI}$$

$$M_{BA} = 10.667 \text{ k·ft}$$

$$M_{BC} = -10.667 \text{ k·ft}$$

$A_y = 10.667 \text{ k} = 10.7 \text{ k}$ **Ans**

$B_y = 14.4 \text{ k}$ **Ans**

$C_x = 0; \quad C_y = -1.0667 \text{ k} = -1.07 \text{ k}$ **Ans**

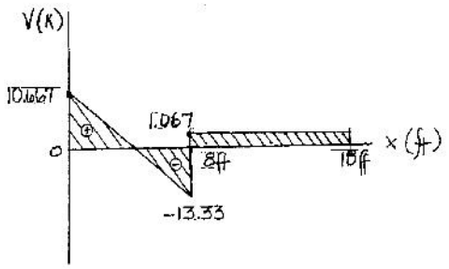

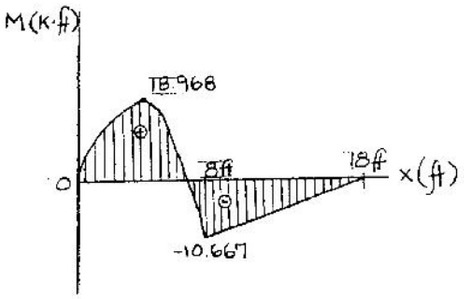

www.e-kitabi.com

c11.qxd 6/24/08 4:34 PM Page 313

© 2009 by R.C. Hibbeler. Published by Pearson Prentice Hall, Pearson Education, Inc., Upper Saddle River, NJ. All rights reserved. This material is protected under all copyright laws as they currently exist. No portion of this material may be reproduced, in any form or by any means, without permission in writing from the publisher.

***11–8.** Determine the moments at B, C, and D, then draw the moment diagram for $ABDE$. Assume A is pinned, D is a roller, and C is fixed. EI is constant.

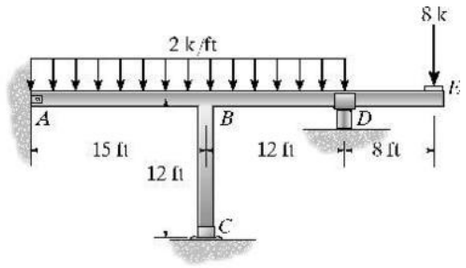

$$(FEM)_{BA} = \frac{2(15)^2}{8} = 56.25 \text{ k·ft}$$

$$(FEM)_{BD} = \frac{-2(12)^2}{12} = -24 \text{ k·ft}$$

$$(FEM)_{DB} = 24.0 \text{ k·ft}$$

$$(FEM)_{BC} = (FEM)_{CB} = 0$$

$$M_N = 3E\left(\frac{I}{L}\right)(\theta_N - \psi) + (FEM)_N$$

$$M_{BA} = 3E\left(\frac{I}{15}\right)(\theta_B - 0) + 56.25$$

$$M_{BA} = 0.2EI\theta_B + 56.25 \qquad (1)$$

$$M_N = 2E\left(\frac{I}{L}\right)(2\theta_N + \theta_F - 3\psi) + (FEM)_N$$

$$M_{BD} = 2E\left(\frac{I}{12}\right)(2\theta_B + \theta_D - 0) - 24$$

$$M_{BD} = 0.3333EI\theta_B + 0.1667EI\theta_D - 24 \qquad (2)$$

$$M_{DB} = 2E\left(\frac{I}{12}\right)(2\theta_D + \theta_B - 0) + 24$$

$$M_{DB} = 0.3333EI\theta_D + 0.1666EI\theta_B + 24 \qquad (3)$$

$$M_{BC} = 2E\left(\frac{I}{12}\right)(2\theta_B + 0 - 0) + 0$$

$$M_{BC} = 0.3333EI\theta_B \qquad (4)$$

$$M_{CB} = 2E\left(\frac{I}{12}\right)(2(0) + \theta_B - 0) + 0$$

$$M_{CB} = 0.1667EI\theta_B \qquad (5)$$

Equilibrium

$$M_{BA} + M_{BC} + M_{BD} = 0 \qquad (6)$$

$$M_{DB} - 64 = 0 \qquad (7)$$

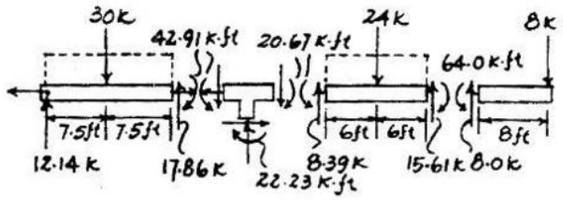

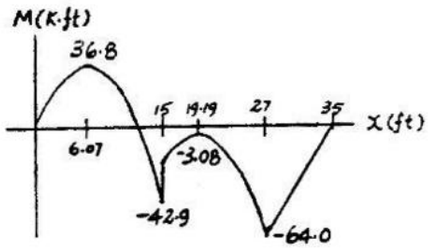

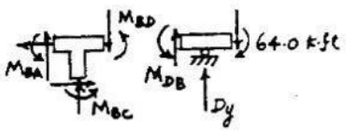

Solving Eqs. 1 - 7 :

$$\theta_B = \frac{-66.70}{EI} \qquad \theta_D = \frac{153.35}{EI}$$

$M_{BA} = 42.9$ k·ft **Ans**

$M_{BD} = -20.7$ k·ft **Ans**

$M_{DB} = 64.0$ k·ft **Ans**

$M_{BC} = -22.2$ k·ft **Ans**

$M_{CB} = -11.1$ k·ft **Ans**

www.e-kitabi.com

c11.qxd 6/24/08 4:34 PM Page 314

© 2009 by R.C. Hibbeler. Published by Pearson Prentice Hall, Pearson Education, Inc., Upper Saddle River, NJ. All rights reserved. This material is protected under all copyright laws as they currently exist. No portion of this material may be reproduced, in any form or by any means, without permission in writing from the publisher.

11–9. Determine the moment at B, then draw the moment diagram for each member of the frame. Assume the supports at A and C are pinned and B is a fixed joint. EI is constant.

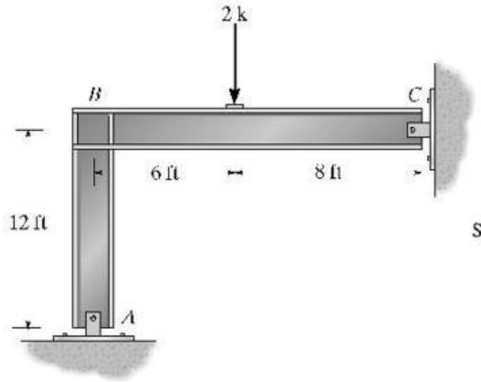

$$(FEM)_{BC} = \frac{P}{L^2}\left(b^2 a + \frac{a^2 b}{2}\right) = \frac{2\text{ k}}{(14\text{ ft})^2}\left((8\text{ ft})^2(6\text{ ft}) + \frac{(6\text{ ft})^2\,8\text{ ft}}{2}\right) = 5.388\text{ k}\cdot\text{ft}$$

$$M_{BC} = \frac{3}{14}EI\theta_B - 5.388$$

$$M_{BA} = \frac{3EI}{12}(\theta_B - 0)$$

$$M_{BC} + M_{BA} = 0$$

Solving,

$$\theta_B = \frac{11.604}{EI}$$

$M_{BC} = -2.901\text{ k}\cdot\text{ft}$ **Ans**

$M_{BA} = 2.901\text{ k}\cdot\text{ft}$ **Ans**

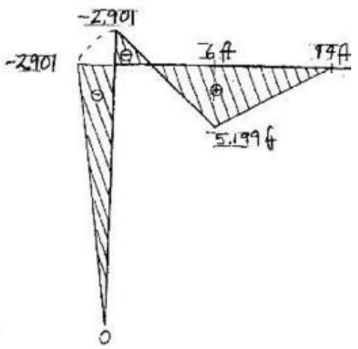

11–10. Determine the moments at B and D, then draw the moment diagram. Assume A and C are pinned and B and D are fixed connected. EI is constant.

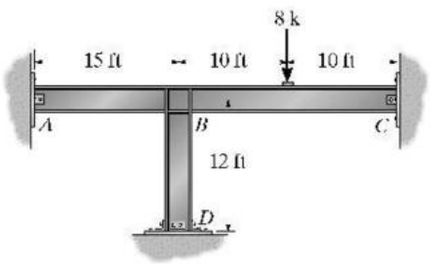

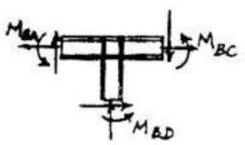

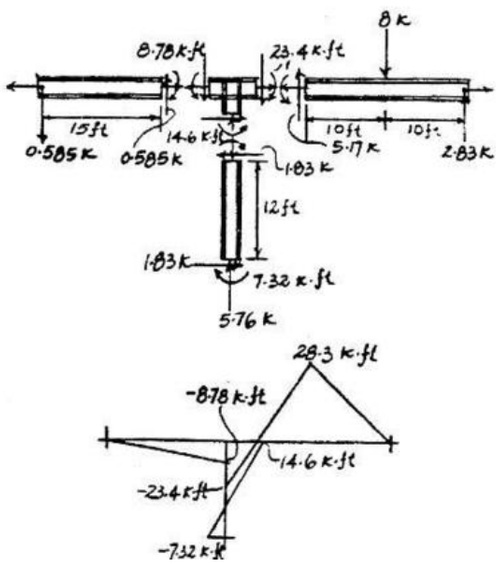

$$(FEM)_{BA} = 0$$

$$(FEM)_{BC} = \frac{-3(8)(20)}{16} = -30\text{ k}\cdot\text{ft}$$

$$(FEM)_{BD} = (FEM)_{DB} = 0$$

$$M_N = 3E\left(\frac{I}{L}\right)(\theta_N - \psi) + (FEM)_N$$

$$M_{BA} = 3E\left(\frac{I}{15}\right)(\theta_B - 0) + 0$$

$$M_{BA} = 0.2EI\theta_B \qquad (1)$$

$$M_{BC} = 3E\left(\frac{I}{20}\right)(\theta_B - 0) - 30$$

$$M_{BC} = 0.15EI\theta_B - 30 \qquad (2)$$

$$M_N = 2E\left(\frac{I}{L}\right)(2\theta_N + \theta_F - 3\psi) + (FEM)_N$$

$$M_{BD} = 2E\left(\frac{I}{12}\right)(2\theta_B + 0 - 0) + 0$$

$$M_{BD} = 0.3333EI\theta_B \qquad (3)$$

$$M_{DB} = 2E\left(\frac{I}{12}\right)(2(0) + \theta_B - 0) + 0$$

$$M_{DB} = 0.1667EI\theta_B \qquad (4)$$

Equilibrium

$$M_{BA} + M_{BC} + M_{BD} = 0 \qquad (5)$$

Solving Eqs. 1–5:

$$\theta_B = \frac{43.90}{EI}$$

$M_{BA} = 8.78\text{ k}\cdot\text{ft}$ **Ans**

$M_{BC} = -23.4\text{ k}\cdot\text{ft}$ **Ans**

$M_{BD} = 14.6\text{ k}\cdot\text{ft}$ **Ans**

$M_{DB} = 7.32\text{ k}\cdot\text{ft}$ **Ans**

www.e-kitabi.com

c11.qxd 6/24/08 4:34 PM Page 315

© 2009 by R.C. Hibbeler. Published by Pearson Prentice Hall, Pearson Education, Inc., Upper Saddle River, NJ. All rights reserved. This material is protected under all copyright laws as they currently exist. No portion of this material may be reproduced, in any form or by any means, without permission in writing from the publisher.

11–11. Determine the moment at B, then draw the moment diagram for each member of the frame. Assume the supports at A and C are fixed and B is a fixed joint. EI is constant.

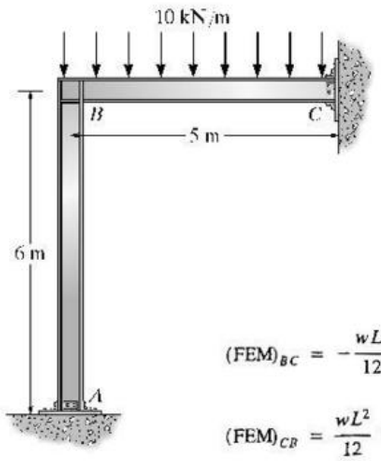

$$(\text{FEM})_{BC} = -\frac{wL^2}{12} = -\frac{10\ \text{kN/m}\ (5\ \text{m})^2}{12} = -20.833\ \text{kN}\cdot\text{m}$$

$$(\text{FEM})_{CB} = \frac{wL^2}{12} = 20.833\ \text{kN}\cdot\text{m}$$

$$M_{BA} = \frac{2EI}{6}(2\theta_B + 0 - 3(0)) +) = \frac{2}{3}EI\theta_B$$

$$M_{AB} = \frac{1}{3}EI\theta_B$$

$$M_{BC} = \frac{4}{5}EI\theta_B - 20.833\ \text{kN}\cdot\text{m}$$

$$M_{CB} = \frac{2}{5}EI\theta_B + 20.833\ \text{kN}\cdot\text{m}$$

$$+\Sigma M_B = 0; \qquad M_{BC} + M_{BA} = 0;$$

$$\theta_B = \frac{14.204}{EI}\ \text{kN}\cdot\text{m}$$

$M_{BA} = 9.47\ \text{kN}\cdot\text{m}$ **Ans**

$M_{AB} = 4.74\ \text{kN}\cdot\text{m}$ **Ans**

$M_{BC} = -9.47\ \text{kN}\cdot\text{m}$ **Ans**

$M_{CB} = 26.52\ \text{kN}\cdot\text{m}$ **Ans**

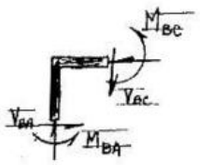

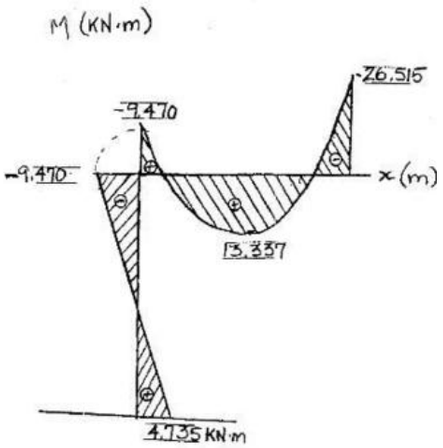

www.e-kitabi.com

c11.qxd 6/24/08 4:34 PM Page 316

© 2009 by R.C. Hibbeler. Published by Pearson Prentice Hall, Pearson Education, Inc., Upper Saddle River, NJ. All rights reserved. This material is protected under all copyright laws as they currently exist. No portion of this material may be reproduced, in any form or by any means, without permission in writing from the publisher.

***11–12.** Determine the moments at B and C. Assume B and C are rollers and A and D are pinned. EI is constant.

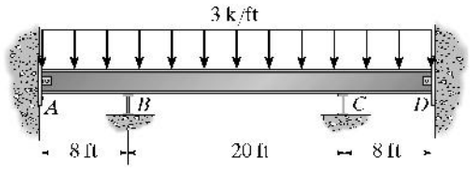

$$(\text{FEM})_{BA} = \frac{3(8)^2}{8} = 24 \text{ k}\cdot\text{ft}$$

$$(\text{FEM})_{BC} = \frac{-3(20)^2}{12} = -100 \text{ k}\cdot\text{ft}$$

$$(\text{FEM})_{CB} = 100 \text{ k}\cdot\text{ft}$$

$$(\text{FEM})_{CD} = -24 \text{ k}\cdot\text{ft}$$

$$M_N = 3E\left(\frac{I}{L}\right)(\theta_N - \psi) + (\text{FEM})_N$$

$$M_{BA} = 3E\left(\frac{I}{8}\right)(\theta_B - 0) + 24$$

$$M_{BA} = \frac{3EI\theta_B}{8} + 24 \qquad (1)$$

$$M_N = 2E\left(\frac{I}{L}\right)(2\theta_N + \theta_F - 3\psi) + (\text{FEM})_N$$

$$M_{BC} = 2E\left(\frac{I}{20}\right)(2\theta_B + \theta_C - 0) - 100$$

$$M_{BC} = 0.2EI\theta_B + 0.1EI\theta_C - 100 \qquad (2)$$

$$M_{CB} = 2E\left(\frac{I}{20}\right)(2\theta_C + \theta_B - 0) + 100$$

$$M_{CB} = 0.2EI\theta_C + 0.1EI\theta_B + 100 \qquad (3)$$

$$M_N = 3E\left(\frac{I}{L}\right)(\theta_N - \psi) + (\text{FEM})_N$$

$$M_{CD} = 3E\left(\frac{I}{8}\right)(\theta_C - 0) - 24$$

$$M_{CD} = \frac{3EI\theta_C}{8} - 24 \qquad (4)$$

Equilibrium

$$M_{BA} + M_{BC} = 0 \qquad (5)$$

$$M_{CB} + M_{CD} = 0 \qquad (6)$$

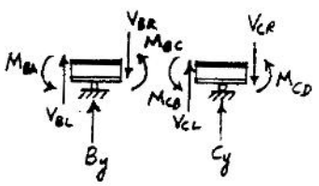

Solving Eqs. 1-6:

$$\theta_B = \frac{160}{EI} \qquad \theta_C = -\frac{160}{EI}$$

$M_{BA} = 84.0 \text{ k}\cdot\text{ft}$ **Ans**

$M_{BC} = -84.0 \text{ k}\cdot\text{ft}$ **Ans**

$M_{CB} = 84.0 \text{ k}\cdot\text{ft}$ **Ans**

$M_{CD} = -84.0 \text{ k}\cdot\text{ft}$ **Ans**

www.e-kitabi.com

c11.qxd 6/24/08 4:34 PM Page 317

© 2009 by R.C. Hibbeler. Published by Pearson Prentice Hall, Pearson Education, Inc., Upper Saddle River, NJ. All rights reserved. This material is protected under all copyright laws as they currently exist. No portion of this material may be reproduced, in any form or by any means, without permission in writing from the publisher.

11–13. Determine the horizontal and vertical components of reaction at A and C. Assume A and C are pins and B is a fixed joint. Take $E = 29(10^3)$ ksi.

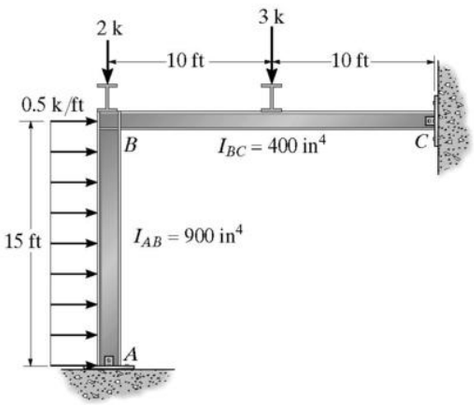

$$(\text{FEM})_{BA} = \frac{(0.5)(15)^2}{8} = 14.06 \text{ k·ft}$$

$$(\text{FEM})_{BC} = \frac{-3(3)(20)}{16} = -11.25 \text{ k·ft}$$

$$M_N = 3E\left(\frac{I}{L}\right)(\theta_N - \psi) + (\text{FEM})_N$$

$$M_{BA} = \frac{3(29)(10^3)(900)}{15(144)}(\theta_B - 0) + 14.06$$

$$M_{BA} = 36\,250\theta_C + 14.06 \qquad (1)$$

$$M_{BC} = \frac{3(29)(10^3)(400)}{20(144)}(\theta_B - 0) - 11.25$$

$$M_{BC} = 12\,083.33\theta_B - 11.25 \qquad (2)$$

Equilibrium

$$M_{BA} + M_{BC} = 0 \qquad (3)$$

Solving Eqs. 1-3:

$$\theta_B = -0.000\,058\,138 \text{ rad}$$

$$M_{BA} = 11.95 \text{ k·ft}$$

$$M_{BC} = -11.95 \text{ k·ft}$$

Thus,

$A_x = 2.95$ k **Ans**
$A_y = 4.10$ k **Ans**
$C_x = 4.55$ k **Ans**
$C_y = 0.902$ k **Ans**

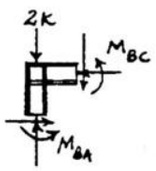

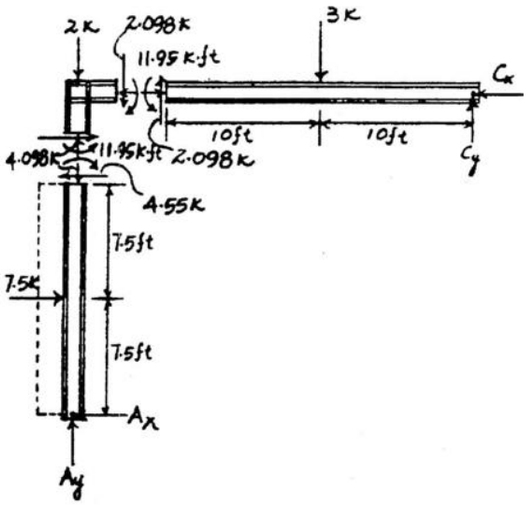

www.e-kitabi.com

c11.qxd 6/24/08 4:34 PM Page 318

© 2009 by R.C. Hibbeler. Published by Pearson Prentice Hall, Pearson Education, Inc., Upper Saddle River, NJ. All rights reserved. This material is protected under all copyright laws as they currently exist. No portion of this material may be reproduced, in any form or by any means, without permission in writing from the publisher.

11–14. Determine the internal moments at A and B, then draw the moment diagram. Assume B and C are rollers. EI is constant.

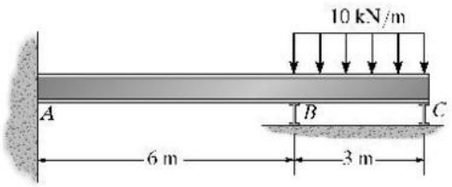

$$M_N = 2E\left(\frac{I}{L}\right)(2\theta_N + \theta_F - 3\psi) + (\text{FEM})_N$$

$$M_{AB} = \frac{2EI}{6}(2(0) + \theta_B - 0) + 0$$

$$M_{BA} = \frac{2EI}{6}(2\theta_B) + 0$$

$$M_N = 3E\left(\frac{I}{L}\right)(\theta_N - \psi) + (\text{FEM})_N$$

$$M_{BC} = \frac{3EI}{3}(\theta_B - 0) - \frac{(10)(3)^2}{8}$$

Equilibrium

$$M_{BA} + M_{BC} = 0$$

$$\frac{4EI}{6}\theta_B + \frac{3EI}{3}\theta_B - 11.25 = 0$$

$$\theta_B = \frac{6.75}{EI}$$

$M_{AB} = 2.25\ \text{kN}\cdot\text{m}$ Ans

$M_{BA} = 4.50\ \text{kN}\cdot\text{m}$ Ans

$M_{BC} = -4.50\ \text{kN}\cdot\text{m}$ Ans

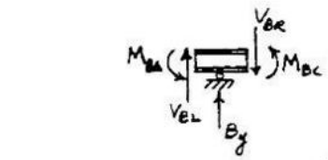

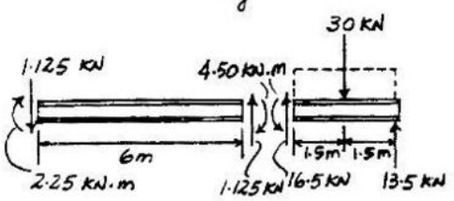

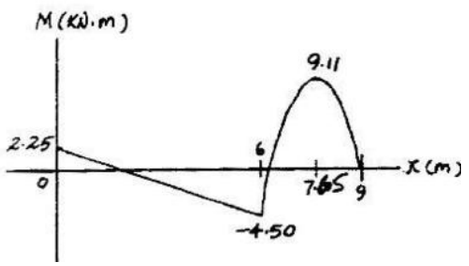

www.e-kitabi.com

c11.qxd 6/24/08 4:34 PM Page 319

© 2009 by R.C. Hibbeler. Published by Pearson Prentice Hall, Pearson Education, Inc., Upper Saddle River, NJ. All rights reserved. This material is protected under all copyright laws as they currently exist. No portion of this material may be reproduced, in any form or by any means, without permission in writing from the publisher.

11–15. Determine the moments at A, B, and C, then draw the moment diagram. Assume A is fixed. EI is constant.

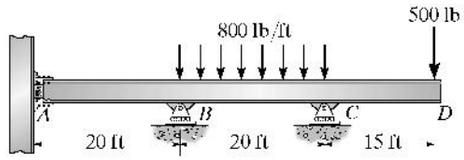

$$(\text{FEM})_{AB} = (\text{FEM})_{BA} = 0$$

$$(\text{FEM})_{BC} = \frac{-(0.8)(20)^2}{12} = -26.67 \text{ k·ft}$$

$$(\text{FEM})_{CB} = 26.67 \text{ k·ft}$$

$$M_N = 2E\left(\frac{I}{L}\right)(2\theta_N + \theta_F - 3\psi) + (\text{FEM})_N$$

$$M_{AB} = 2E\left(\frac{I}{20}\right)(2(0) + \theta_B - 0) + 0$$

$$M_{AB} = 0.1EI\theta_B \qquad (1)$$

$$M_{BA} = 2E\left(\frac{I}{20}\right)(2\theta_B + 0 - 0) + 0$$

$$M_{BA} = 0.2EI\theta_B \qquad (2)$$

$$M_{BC} = 2E\left(\frac{I}{20}\right)(2\theta_B + \theta_C - 0) - 26.67$$

$$M_{BC} = 0.2EI\theta_B + 0.1EI\theta_C - 26.67 \qquad (3)$$

$$M_{CB} = 2E\left(\frac{I}{20}\right)(2\theta_C + \theta_B - 0) + 26.67$$

$$M_{CB} = 0.2EI\theta_C + 0.1EI\theta_B + 26.67 \qquad (4)$$

Equilibrium

$$M_{BA} + M_{BC} = 0 \qquad (5)$$

$$M_{CB} - 7.50 = 0 \qquad (6)$$

Solving

$$\theta_C = -\frac{147.62}{EI} \qquad \theta_B = \frac{103.57}{EI}$$

$M_{AB} = 10.36 \text{ k·ft} = 10.4 \text{ k·ft}$ **Ans**

$M_{BA} = 20.71 \text{ k·ft} = 20.7 \text{ k·ft}$ **Ans**

$M_{BC} = -20.71 \text{ k·ft} = -20.7 \text{ k·ft}$ **Ans**

$M_{CB} = 7.50 \text{ k·ft}$ **Ans**

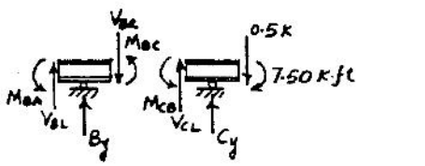

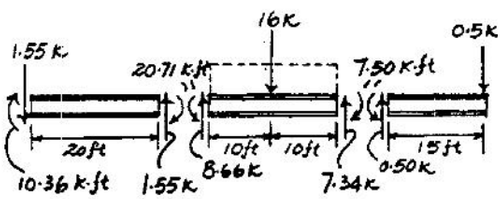

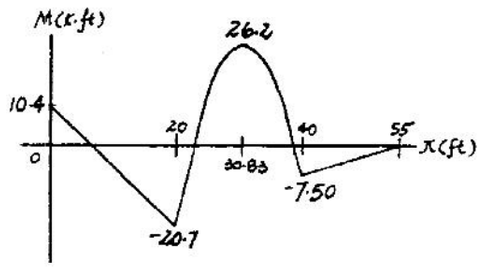

www.e-kitabi.com

c11.qxd 6/24/08 4:34 PM Page 320

© 2009 by R.C. Hibbeler. Published by Pearson Prentice Hall, Pearson Education, Inc., Upper Saddle River, NJ. All rights reserved. This material is protected under all copyright laws as they currently exist. No portion of this material may be reproduced, in any form or by any means, without permission in writing from the publisher.

***11–16.** Determine the moments at the ends of each member of the frame. The supports at A and C and joint B are fixed connected. EI is constant.

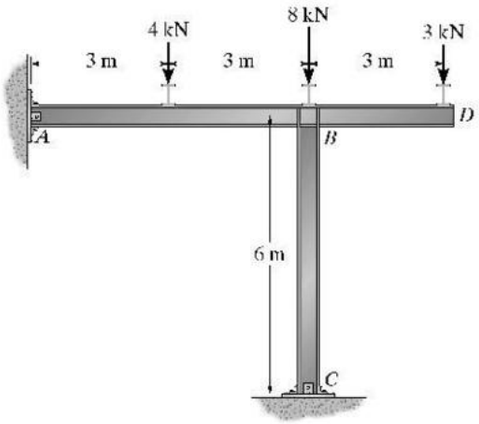

$$M_N = 2E\left(\frac{I}{L}\right)(2\theta_N + \theta_F - 3\psi) + (\text{FEM})_N$$

$$M_{AB} = \frac{2EI}{6}(0 + \theta_B) - \frac{(4)(6)}{8}$$

$$M_{BA} = \frac{2EI}{6}(2\theta_B) + \frac{4(6)}{8}$$

$$M_{BC} = \frac{2EI}{6}(2\theta_B)$$

$$M_{CB} = \frac{2EI}{6}(\theta_B)$$

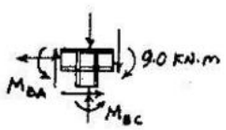

Equilibrium

$$M_{BA} + M_{BC} - 9 = 0$$

$$\frac{2EI}{6}(2\theta_B) + \frac{4(6)}{8} + \frac{2EI}{6}(2\theta_B) - 9 = 0$$

$$\theta_B = \frac{4.5}{EI}$$

Thus,

$$M_{AB} = \frac{2EI}{6}\left(0 + \frac{4.5}{EI}\right) - \frac{4(6)}{8} = -1.50\ \text{kN}\cdot\text{m} \quad \text{Ans}$$

$$M_{CB} = \frac{2EI}{6}\left(\frac{4.5}{EI}\right) = 1.50\ \text{kN}\cdot\text{m} \quad \text{Ans}$$

$$M_{BA} = \frac{2EI}{6}\left(2\frac{4.5}{EI}\right) - \frac{4(6)}{8} = 6.00\ \text{kN}\cdot\text{m} \quad \text{Ans}$$

$$M_{BC} = \frac{2EI}{6}\left(2\left(\frac{4.5}{EI}\right)\right) = 3.00\ \text{kN}\cdot\text{m} \quad \text{Ans}$$

www.e-kitabi.com

c11.qxd 6/24/08 4:34 PM Page 321

© 2009 by R.C. Hibbeler. Published by Pearson Prentice Hall, Pearson Education, Inc., Upper Saddle River, NJ. All rights reserved. This material is protected under all copyright laws as they currently exist. No portion of this material may be reproduced, in any form or by any means, without permission in writing from the publisher.

11–17. The continuous beam supports the three concentrated loads. Determine the maximum moment in the beam and then draw the moment diagram. EI is constant.

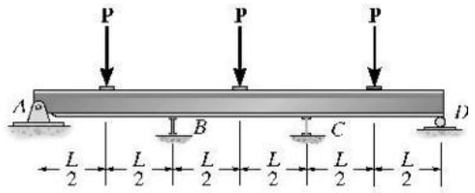

$$M_N = 3E\left(\frac{I}{L}\right)(\theta_N - \psi) + (\text{FEM})_N$$

$$M_{BA} = \frac{3EI}{L}(\theta_B - 0) + \frac{3PL}{16}$$

$$M_N = 2E\left(\frac{I}{L}\right)(2\theta_N + \theta_F - 3\psi) + (\text{FEM})_N$$

$$M_{BC} = \frac{2EI}{L}(2\theta_B + \theta_C - 0) - \frac{PL}{8}$$

$$M_{CB} = \frac{2EI}{L}(2\theta_C + \theta_B - 0) + \frac{PL}{8}$$

$$M_N = 3E\left(\frac{I}{L}\right)(\theta_N - \psi) + (\text{FEM})_N$$

$$M_{CD} = \frac{3EI}{L}(\theta_C - 0) - \frac{3PL}{16}$$

Equilibrium :

$$M_{BA} + M_{BC} = 0$$

$$M_{CB} + M_{CD} = 0$$

$$\frac{3EI}{L}\theta_B + \frac{3PL}{16} + \frac{4EI}{L}\theta_B + \frac{2EI}{L}\theta_C - \frac{PL}{8} = 0$$

$$2\theta_C + 7\theta_B = -\frac{PL^2}{16EI} \qquad (1)$$

$$\frac{2EI}{L}(2\theta_C + \theta_B) + \frac{PL}{8} + \frac{3EI}{L}\theta_C - \frac{3PL}{16} = 0$$

$$7\theta_C + 2\theta_B = \frac{PL^2}{16EI} \qquad (2)$$

Solving Eqs. 1–2 :

$$\theta_B = \frac{-PL^2}{80EI}$$

$$\theta_C = \frac{PL^2}{80EI}$$

Thus,

$$M_{BA} = \frac{3PL}{20}$$

$$M_{BC} = \frac{-3PL}{20}$$

$$M_{CB} = \frac{3PL}{20}$$

$$M_{CD} = -\frac{3PL}{20}$$

$$+\Sigma M_B = 0: \qquad -A_y(L) + P\left(\frac{L}{2}\right) - \frac{3PL}{20} = 0$$

$$A_y = \frac{7}{20}P$$

$$+\Sigma M_C = 0: \qquad -V_{BR}(L) + P\left(\frac{L}{2}\right) + \frac{3PL}{20} - \frac{3PL}{20} = 0$$

$$V_{BR} = \frac{P}{2}$$

$$+\Sigma M = 0. \qquad M_1 - \frac{7}{20}P\left(\frac{L}{2}\right) = 0$$

$$M_1 = M_{max} = \frac{7}{40}PL \qquad \textbf{Ans}$$

$$+\Sigma M = 0. \qquad \frac{3PL}{20} - \frac{P}{2}\left(\frac{L}{2}\right) + M_2 = 0$$

$$M_2 = \frac{1}{10}PL$$

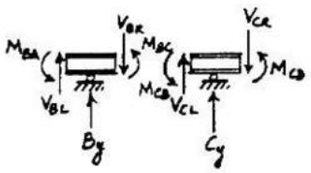

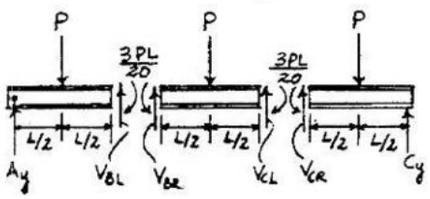

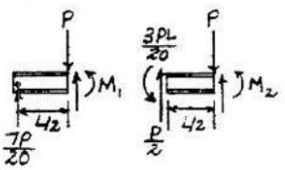

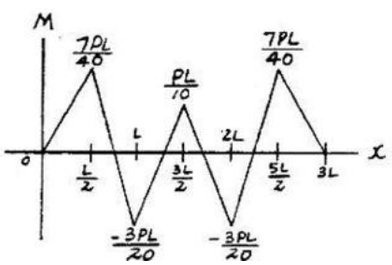

www.e-kitabi.com

c11.qxd 6/24/08 4:34 PM Page 322

© 2009 by R.C. Hibbeler. Published by Pearson Prentice Hall, Pearson Education, Inc., Upper Saddle River, NJ. All rights reserved. This material is protected under all copyright laws as they currently exist. No portion of this material may be reproduced, in any form or by any means, without permission in writing from the publisher.

11–18. Determine the moments at each joint and support of the battered-column frame. The joints and supports are fixed connected. EI is constant.

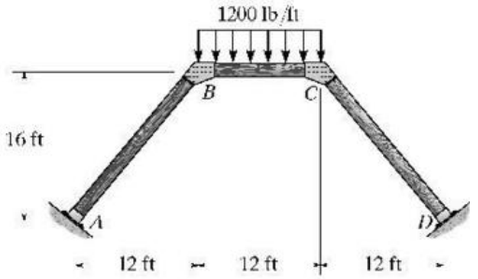

$$M_N = 2E\left(\frac{I}{L}\right)(2\theta_N + \theta_F - 3\psi) + (\text{FEM})_N$$

$$M_{AB} = \frac{2EI}{20}(0 + \theta_B) + 0$$

$$M_{BA} = \frac{2EI}{20}(2\theta_B + 0) + 0$$

$$M_{BC} = \frac{2EI}{12}(2\theta_B + \theta_C) - \frac{1.2(12)^2}{12}$$

$$M_{CB} = \frac{2EI}{12}(2\theta_C + \theta_B) + \frac{1.2(12)^2}{12}$$

$$M_{CD} = \frac{2EI}{20}(2\theta_C + 0) + 0$$

$$M_{DC} = \frac{2EI}{20}(0 + \theta_C) + 0$$

Equilibrium

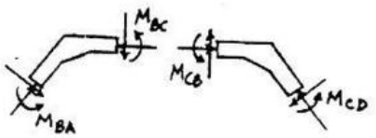

$$M_{BA} + M_{BC} = 0$$

$$\frac{2EI}{20}(2\theta_D + \frac{2EI}{12}(2\theta_B + \theta_C) - 14.4 = 0$$

$$0.5333\theta_D + 0.1667\theta_C = \frac{14.4}{EI} \qquad (1)$$

$$M_{CB} + M_{CD} = 0$$

$$\frac{2EI}{12}(2\theta_C - \theta_B) + 14.4 + \frac{2}{20}(2\theta_C) = 0$$

$$0.5333\theta_C + 0.1667\theta_B = \frac{-14.4}{EI} \qquad (2)$$

Solving Eqs. 1-2:

$$\theta_B = \frac{39.27}{EI}$$

$M_{AB} = 3.93$ k·ft **Ans**

$M_{BA} = 7.85$ k·ft **Ans**

$M_{BC} = -7.85$ k·ft **Ans**

$M_{CB} = 7.85$ k·ft **Ans**

$M_{CD} = -7.85$ k·ft **Ans**

$M_{DC} = -3.93$ k·ft **Ans**

www.e-kitabi.com

c11.qxd 6/24/08 4:34 PM Page 323

© 2009 by R.C. Hibbeler. Published by Pearson Prentice Hall, Pearson Education, Inc., Upper Saddle River, NJ. All rights reserved. This material is protected under all copyright laws as they currently exist. No portion of this material may be reproduced, in any form or by any means, without permission in writing from the publisher.

11–19. The frame is made from pipe that is fixed connected. If it supports the loading shown, determine the moments developed at each of the joints and supports. EI is constant.

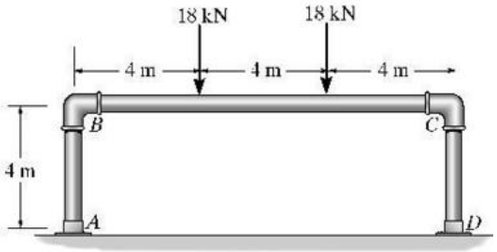

$$M_N = 2E\left(\frac{I}{L}\right)(2\theta_N + \theta_F - 3\psi) + (\text{FEM})_N$$

$$M_{AB} = \frac{2EI}{4}(0 + \theta_B) + 0$$

$$M_{BA} = \frac{2EI}{4}(2\theta_B + 0) + 0$$

$$M_{BC} = \frac{2EI}{12}(2\theta_B + \theta_C) - \frac{2(18)(12)}{9}$$

$$M_{CB} = \frac{2EI}{12}(2\theta_C + \theta_B) + \frac{2(18)(12)}{9}$$

$$M_{CD} = \frac{2EI}{4}(2\theta_C + 0) + 0$$

$$M_{DC} = \frac{2EI}{4}(0 + \theta_C) + 0$$

Equilibrium

$$M_{BA} + M_{BC} = 0$$

$$\frac{2EI}{4}(2\theta_B) + \frac{2EI}{12}(2\theta_B + \theta_C) - 48 = 0$$

$$1.333\theta_B + 0.1667\theta_C = \frac{48}{EI} \qquad (1)$$

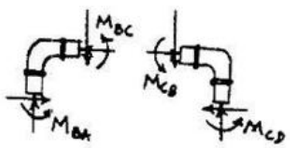

$$M_{CB} + M_{CD} = 0$$

$$\frac{2EI}{12}(2\theta_C + \theta_B) + 48 + \frac{2EI}{4}(2\theta_C) = 0$$

$$1.333\theta_C + 0.1667\theta_B = -\frac{48}{EI} \qquad (2)$$

Solving Eqs. (1) and (2):

$$\theta_B = -\theta_C = \frac{41.143}{EI}$$

$M_{AB} = 20.6$ kN·m **Ans**

$M_{BA} = 41.1$ kN·m **Ans**

$M_{BC} = -41.1$ kN·m **Ans**

$M_{CB} = 41.1$ kN·m **Ans**

$M_{CD} = -41.1$ kN·m **Ans**

$M_{DC} = -20.6$ kN·m **Ans**

www.e-kitabi.com

c11.qxd 6/24/08 4:34 PM Page 324

© 2009 by R.C. Hibbeler. Published by Pearson Prentice Hall, Pearson Education, Inc., Upper Saddle River, NJ. All rights reserved. This material is protected under all copyright laws as they currently exist. No portion of this material may be reproduced, in any form or by any means, without permission in writing from the publisher.

***11–20.** Determine the moments at each joint and fixed support, then draw the moment diagram. EI is constant.

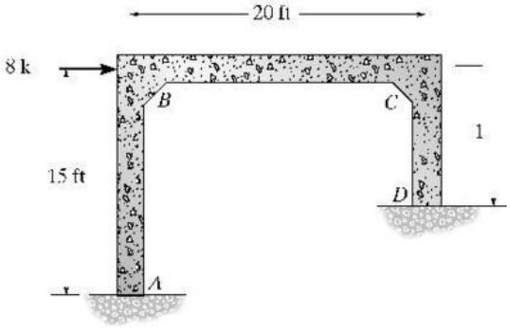

$(FEM)_{AB} = (FEM)_{BA} = 0$

$(FEM)_{BC} = (FEM)_{CB} = 0$

$(FEM)_{CD} = (FEM)_{DC} = 0$

$\psi_{AB} = \frac{2}{3}\psi_{DC}$

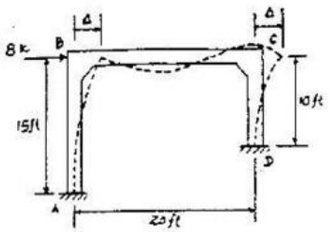

$$M_N = 2E\left(\frac{I}{L}\right)(2\theta_N + \theta_F - 3\psi) + (FEM)_N$$

$$M_{AB} = 2E\left(\frac{I}{15}\right)(2(0) + \theta_B - 3\left(\frac{2}{3}\right)\psi_{DC}) + 0$$

$$M_{AB} = 0.1333EI\theta_B - 0.2667EI\psi_{DC} \quad (1)$$

$$M_{BA} = 2E\left(\frac{I}{15}\right)(2\theta_B + 0 - 3\left(\frac{2}{3}\right)\psi_{DC}) + 0$$

$$M_{BA} = 0.2667EI\theta_B - 0.2667EI\psi_{DC} \quad (2)$$

$$M_{BC} = 2E\left(\frac{I}{20}\right)(2\theta_B + \theta_C - 3(0)) + 0$$

$$M_{BC} = 0.2EI\theta_B + 0.1EI\theta_C \quad (3)$$

$$M_{CB} = 2E\left(\frac{I}{20}\right)(2\theta_C + \theta_B - 3(0)) + 0$$

$$M_{CB} = 0.2EI\theta_C + 0.1EI\theta_B \quad (4)$$

$$M_{CD} = 2E\left(\frac{I}{10}\right)(2\theta_C + 0 - 3\psi_{DC}) + 0$$

$$M_{CD} = 0.4EI\theta_C - 0.6EI\psi_{DC} \quad (5)$$

$$M_{DC} = 2E\left(\frac{I}{10}\right)(2(0) + \theta_C - 3\psi_{DC}) + 0$$

$$M_{DC} = 0.2EI\theta_C - 0.6EI\psi_{DC} \quad (6)$$

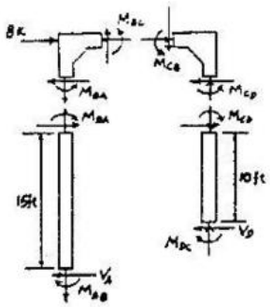

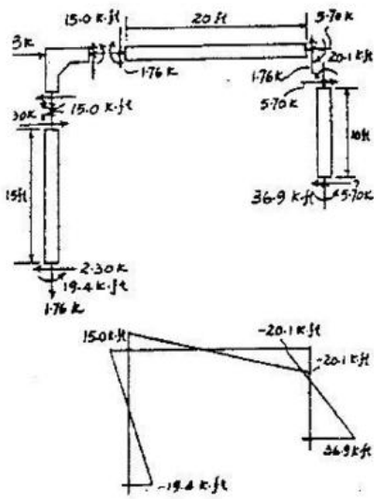

Equilibrium

$$M_{BA} + M_{BC} = 0 \quad (7)$$

$$M_{CB} + M_{CD} = 0 \quad (8)$$

$$V_A + V_D - 8 = 0$$

$$-\frac{(M_{AB} + M_{BA})}{15} - \frac{(M_{CD} + M_{DC})}{10} - 8 = 0$$

$$2M_{AB} + 2M_{BA} + 3M_{CD} + 3M_{DC} = -240 \quad (9)$$

Solving these equations:

$$\theta_B = \frac{33.149}{EI} \qquad \theta_C = \frac{83.978}{EI}$$

$$\psi_{DC} = \frac{89.503}{EI}$$

$M_{AB} = -19.4$ k·ft **Ans**

$M_{BA} = -15.0$ k·ft **Ans**

$M_{BC} = 15.0$ k·ft **Ans**

$M_{CB} = 20.1$ k·ft **Ans**

$M_{CD} = -20.1$ k·ft **Ans**

$M_{DC} = -36.9$ k·ft **Ans**

www.e-kitabi.com

c11.qxd 6/24/08 4:34 PM Page 325

© 2009 by R.C. Hibbeler. Published by Pearson Prentice Hall, Pearson Education, Inc., Upper Saddle River, NJ. All rights reserved. This material is protected under all copyright laws as they currently exist. No portion of this material may be reproduced, in any form or by any means, without permission in writing from the publisher.

11–21. Determine the moments at each joint and support. There are fixed connections at B and C and fixed supports at A and D. EI is constant.

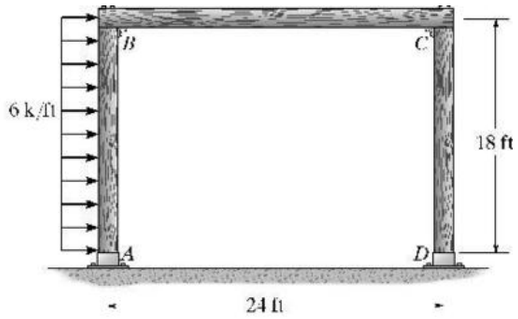

$$(FEM)_{AB} = \frac{-6(18)^2}{12} = -162\ \text{k}\cdot\text{ft}$$

$$(FEM)_{BA} = 162\ \text{k}\cdot\text{ft}$$

$$(FEM)_{BC} = (FEM)_{CB} = 0$$

$$(FEM)_{CD} = (FEM)_{DC} = 0$$

$$\psi_{AB} = \psi_{DC}$$

$$M_N = 2E\left(\frac{I}{L}\right)(2\theta_N + \theta_F - 3\psi) + (FEM)_N$$

$$M_{AB} = 2E\left(\frac{I}{18}\right)(2(0) + \theta_B - 3\psi_{AB}) - 162$$

$$M_{AB} = 0.1111EI\theta_B - 0.3333EI\psi_{AB} - 162 \qquad (1)$$

$$M_{BA} = 2E\left(\frac{I}{18}\right)(2\theta_B + 0 - 3\psi_{AB}) + 162$$

$$M_{BA} = 0.2222EI\theta_B - 0.333EI\psi_{AB} + 162 \qquad (2)$$

$$M_{BC} = 2E\left(\frac{I}{24}\right)(2\theta_B + \theta_C - 3(0)) + 0$$

$$M_{BC} = 0.1667EI\theta_B + 0.08333EI\theta_C \qquad (3)$$

$$M_{CB} = 2E\left(\frac{I}{24}\right)(2\theta_C + \theta_B - 3(0)) + 0$$

$$M_{CB} = 0.1667EI\theta_B + 0.08333EI\theta_C \qquad (4)$$

$$M_{CD} = 2E\left(\frac{I}{18}\right)(2\theta_C + 0 - 3\psi_{AB}) + 0$$

$$M_{CD} = 0.2222EI\theta_C - 03333EI\psi_{AB} \qquad (5)$$

$$M_{DC} = 2E\left(\frac{I}{18}\right)(2(0) + \theta_C - 3\psi_{AB}) + 0$$

$$M_{DC} = 0.1111EI\theta_C - 0.3333EI\psi_{AB} \qquad (6)$$

Equilibrium

$$M_{BA} + M_{BC} = 0 \qquad (7)$$

$$M_{CD} + M_{CB} = 0 \qquad (8)$$

$$V_A + V_D - 6(18) = 0$$

$$-\frac{(M_{AB} + M_{BA} - 972)}{18} - \frac{(M_{CD} + M_{DC})}{18} - 108 = 0$$

$$M_{AB} + M_{BA} + M_{CD} + M_{DC} = -972 \qquad (9)$$

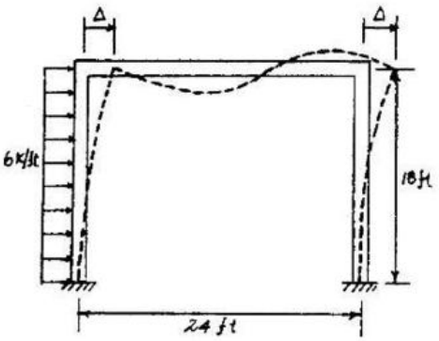

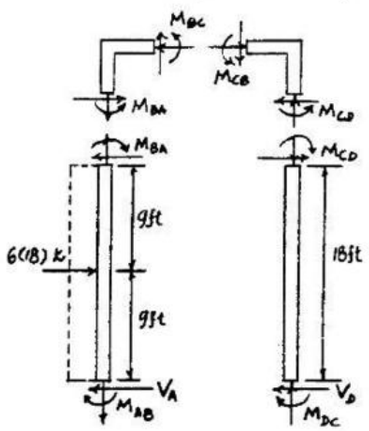

Solving these equations :

$$\theta_B = \frac{265.09}{EI}, \qquad \theta_C = \frac{795.27}{EI}$$

$$\psi_{AB} = \frac{994.09}{EI}$$

$M_{AB} = -464\ \text{k}\cdot\text{ft}$ **Ans**

$M_{BA} = -110\ \text{k}\cdot\text{ft}$ **Ans**

$M_{BC} = 110\ \text{k}\cdot\text{ft}$ **Ans**

$M_{CB} = 155\ \text{k}\cdot\text{ft}$ **Ans**

$M_{CD} = -155\ \text{k}\cdot\text{ft}$ **Ans**

$M_{DC} = -243\ \text{k}\cdot\text{ft}$ **Ans**

www.e-kitabi.com

c11.qxd 6/24/08 4:34 PM Page 326

© 2009 by R.C. Hibbeler. Published by Pearson Prentice Hall, Pearson Education, Inc., Upper Saddle River, NJ. All rights reserved. This material is protected under all copyright laws as they currently exist. No portion of this material may be reproduced, in any form or by any means, without permission in writing from the publisher.

11–22. Determine the moments at A, B, C, and D then draw the moment diagram. The members are fixed connected at the supports and joints. EI is constant.

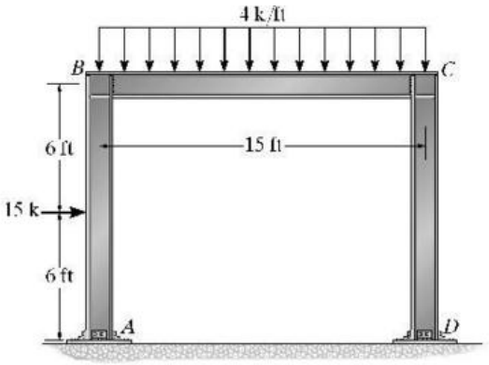

$$(\text{FEM})_{AB} = \frac{-15(12)}{8} = -22.5\ \text{k}\cdot\text{ft}$$

$$(\text{FEM})_{BA} = 22.5\ \text{k}\cdot\text{ft}$$

$$(\text{FEM})_{BC} = \frac{-4(15)^2}{12} = -75.0\ \text{k}\cdot\text{ft}$$

$$(\text{FEM})_{CB} = 75.0\ \text{k}\cdot\text{ft}$$

$$(\text{FEM})_{CD} = (\text{FEM})_{DC} = 0$$

$$\psi_{AB} = \psi_{DC}$$

$$M_N = 2E\left(\frac{I}{L}\right)(2\theta_N + \theta_F - 3\psi) + (\text{FEM})_N$$

$$M_{AB} = 2E\left(\frac{I}{12}\right)(2(0) + \theta_B - 3\psi_{AB}) + 0$$

$$M_{AB} = 0.1667EI\theta_B - 0.5EI\psi_{AB} - 22.5 \qquad (1)$$

$$M_{BA} = 2E\left(\frac{I}{12}\right)(2\theta_B + 0 - 3\psi_{AB}) + 22.5$$

$$M_{BA} = 0.3333EI\theta_B - 0.5EI\psi_{AB} + 22.5 \qquad (2)$$

$$M_{BC} = 2E\left(\frac{I}{15}\right)(2\theta_B + \theta_C - 3(0)) - 75.0$$

$$M_{BC} = 0.2667EI\theta_B + 0.1333EI\theta_C - 75.0 \qquad (3)$$

$$M_{CB} = 2E\left(\frac{I}{15}\right)(2\theta_C + \theta_B - 3(0)) + 75.0$$

$$M_{CB} = 0.2667EI\theta_B + 0.1333EI\theta_C + 75.0 \qquad (4)$$

$$M_{CD} = 2E\left(\frac{I}{12}\right)(2\theta_C + 0 - 3\psi_{AB}) + 0$$

$$M_{CD} = 0.3333EI\theta_C - 0.5EI\psi_{AB} \qquad (5)$$

$$M_{DC} = 2E\left(\frac{I}{12}\right)(2(0) + \theta_C - 3\psi_{AB}) + 0$$

$$M_{DC} = 0.1667EI\theta_C - 0.5EI\psi_{AB} \qquad (6)$$

Equilibrium

$$M_{BA} + M_{BC} = 0 \qquad (7)$$

$$M_{CD} + M_{CB} = 0 \qquad (8)$$

$$V_A + V_D - 15 = 0$$

$$-\frac{(M_{AB} + M_{BA} - 90)}{12} - \frac{(M_{CD} + M_{DC})}{12} - 15 = 0$$

$$M_{AB} + M_{BA} + M_{CD} + M_{DC} = -90 \qquad (9)$$

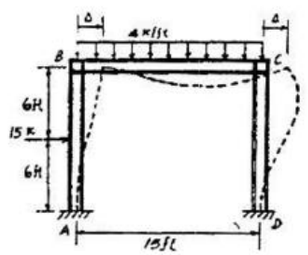

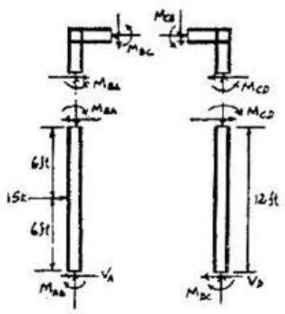

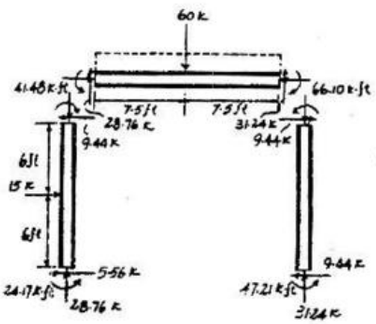

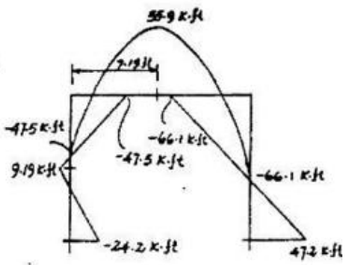

Solving these equations :

$$\theta_B = \frac{159.88}{EI}, \qquad \theta_C = \frac{-113.33}{EI}$$

$$\psi_{AB} = \frac{56.64}{EI}$$

$M_{AB} = -24.17\ \text{k}\cdot\text{ft} = -24.2\ \text{k}\cdot\text{ft}$ **Ans**

$M_{BA} = 47.48\ \text{k}\cdot\text{ft} = 47.5\ \text{k}\cdot\text{ft}$ **Ans**

$M_{BC} = -47.48\ \text{k}\cdot\text{ft} = -47.5\ \text{k}\cdot\text{ft}$ **Ans**

$M_{CB} = 66.01\ \text{k}\cdot\text{ft} = 66.0\ \text{k}\cdot\text{ft}$ **Ans**

$M_{CD} = -66.01\ \text{k}\cdot\text{ft} = -66.0\ \text{k}\cdot\text{ft}$ **Ans**

$M_{DC} = -47.21\ \text{k}\cdot\text{ft} = -47.2\ \text{k}\cdot\text{ft}$ **Ans**

www.e-kitabi.com

c11.qxd 6/24/08 4:34 PM Page 327

© 2009 by R.C. Hibbeler. Published by Pearson Prentice Hall, Pearson Education, Inc., Upper Saddle River, NJ. All rights reserved. This material is protected under all copyright laws as they currently exist. No portion of this material may be reproduced, in any form or by any means, without permission in writing from the publisher.

11–23. The side of the frame is subjected to the hydrostatic loading shown. Determine the moments at each joint and support. EI is constant.

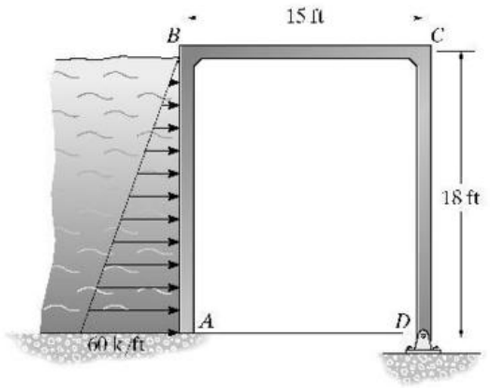

$$(FEM)_{AB} = \frac{-60(18)^2}{20} = -972 \text{ k·ft}$$

$$(FEM)_{BA} = \frac{60(18)^2}{30} = 648 \text{ k·ft}$$

$$(FEM)_B = (FEM)_{CB} = 0$$

$$(FEM)_{CD} = 0$$

$$\psi_{AB} = \psi_{DC}$$

$$M_N = 2E\left(\frac{I}{L}\right)(2\theta_N - \theta_F - 3\psi) + (FEM)_N$$

$$M_{AB} = 2E\left(\frac{I}{18}\right)(2(0) + \theta_B - 3\psi_{AB}) - 972$$

$$M_{AB} = 0.1111EI\theta_B - 0.3333EI\psi_{AB} - 972 \qquad (1)$$

$$M_{BA} = 2E\left(\frac{I}{18}\right)(2\theta_B + 0 - 3\psi_{AB}) + 648$$

$$M_{BA} = 0.2222EI\theta_B - 0.3333EI\psi_{AB} + 648 \qquad (2)$$

$$M_{BC} = 2E\left(\frac{I}{15}\right)(2\theta_B + \theta_C - 3(0)) + 0$$

$$M_{BC} = 0.2667EI\theta_B + 0.1333EI\theta_C \qquad (3)$$

$$M_{CB} = 2E\left(\frac{I}{15}\right)(2\theta_C + \theta_B - 3(0)) + 0$$

$$M_{CB} = 0.2667EI\theta_C + 0.1333EI\theta_B \qquad (4)$$

$$M_N = 3E\left(\frac{I}{L}\right)(\theta_B - \psi) + (FEM)_N$$

$$M_{CD} = 3E\left(\frac{I}{18}\right)(\theta_C - \psi_{AB}) + 0$$

$$M_{CD} = 0.1667EI\theta_C - 0.1666EI\psi_{AB} \qquad (5)$$

Equilibrium

$$M_{BA} + M_{BC} = 0 \qquad (6)$$

$$M_{CB} + M_{CD} = 0 \qquad (7)$$

$$V_A + V_D - \frac{1}{2}(60)(18) = 0$$

$$-\frac{(M_{BA} + M_{AB} - 540(12))}{18} - \frac{(M_{CD})}{18} - 540 = 0$$

$$M_{BA} + M_{AB} + M_{CD} = -3240 \qquad (8)$$

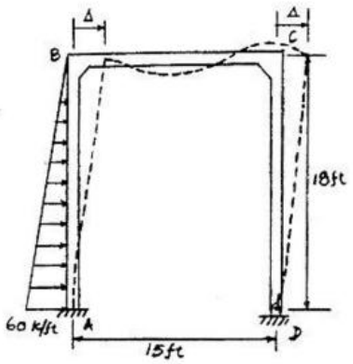

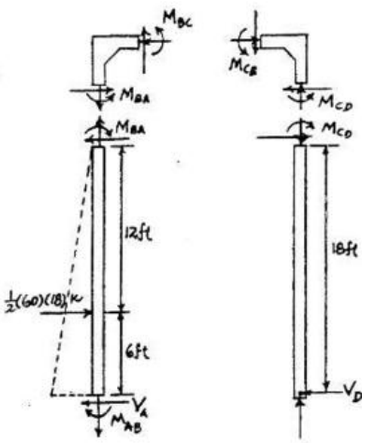

Solving Eqs. 1 - 8 :

$$\theta_C = \frac{1254.194}{EI} \qquad \theta_B = \frac{1222.839}{EI}$$

$$\psi_{AB} = \frac{4239.174}{EI}$$

$M_{AB} = -2.25(10^3)$ k·ft **Ans**

$M_{BA} = -493$ k·ft **Ans**

$M_{BC} = 493$ k·ft **Ans**

$M_{CB} = 497$ k·ft **Ans**

$M_{CD} = -497$ k·ft **Ans**

www.e-kitabi.com

c11.qxd 6/24/08 4:34 PM Page 328

© 2009 by R.C. Hibbeler. Published by Pearson Prentice Hall, Pearson Education, Inc., Upper Saddle River, NJ. All rights reserved. This material is protected under all copyright laws as they currently exist. No portion of this material may be reproduced, in any form or by any means, without permission in writing from the publisher.

***11–24.** Determine the moment at each joint of the gable frame. The roof load is transmitted to each of the purlins over simply supported sections of the roof decking. Assume the supports at A and E are pins and the joints are fixed connected. EI is constant.

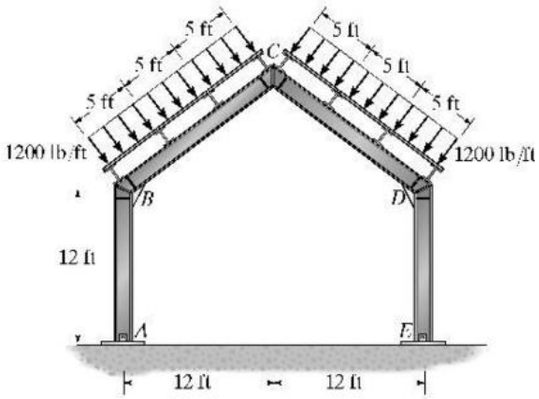

$$(\text{FEM})_{BC} = (\text{FEM})_{CD} = \frac{-2(6)(15)}{9} = -20 \text{ k·ft}$$

$$(\text{FEM})_{CB} = (\text{FEM})_{DC} = 20 \text{ k·ft}$$

$$M_N = 3E\left(\frac{I}{L}\right)(\theta_N - \psi) + (\text{FEM})_N$$

$$M_{BA} = \frac{3EI}{12}(\theta_B)$$

$$M_N = 2E\left(\frac{I}{L}\right)(2\theta_N + \theta_F - 3\psi) + (\text{FEM})_N$$

$$M_{BC} = \frac{2EI}{15}(2\theta_B + \theta_C) - 20$$

$$M_{CB} = \frac{2EI}{15}(2\theta_C + \theta_B) + 20$$

$$M_{CD} = \frac{2EI}{15}(2\theta_C + \theta_D) - 20$$

$$M_{DC} = \frac{2EI}{15}(2\theta_D + \theta_C) + 20$$

$$M_N = 3E\left(\frac{I}{L}\right)(\theta_N - \psi) + (\text{FEM})_N$$

$$M_{DE} = \frac{3EI}{12}(\theta_D)$$

Equilibrium

$$M_{BA} + M_{BC} = 0$$

$$M_{CB} + M_{CD} = 0$$

$$M_{DC} + M_{DE} = 0$$

or

$$\frac{3EI}{12}\theta_B + \frac{2EI}{15}(2\theta_B + \theta_C) - 20 = 0$$

$$0.5167\theta_B + 0.1333\theta_C = \frac{20}{EI}$$

$$\frac{2EI}{15}(2\theta_C + \theta_B) + 20 + \frac{2EI}{15}(2\theta_C + \theta_D) - 20 = 0$$

$$4\theta_C + \theta_B + \theta_D = 0$$

$$\frac{2EI}{15}(2\theta_D + \theta_C) + 20 + \frac{3EI}{12}\theta_D = 0$$

$$0.5167\theta_D + 0.1333\theta_C = -\frac{20}{EI}$$

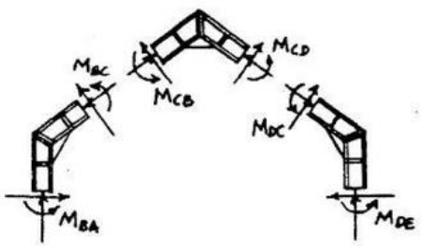

Solving these equations :

$$\theta_C = 0$$

$$\theta_B = -\theta_D = \frac{38.71}{EI}$$

Thus,

$M_{BA} = 9.68$ k·ft **Ans**

$M_{BC} = -9.68$ k·ft **Ans**

$M_{CB} = 25.2$ k·ft **Ans**

$M_{CD} = -25.2$ k·ft **Ans**

$M_{DC} = 9.68$ k·ft **Ans**

$M_{DE} = -9.68$ k·ft **Ans**

www.e-kitabi.com

c11.qxd 6/24/08 4:34 PM Page 329

© 2009 by R.C. Hibbeler. Published by Pearson Prentice Hall, Pearson Education, Inc., Upper Saddle River, NJ. All rights reserved. This material is protected under all copyright laws as they currently exist. No portion of this material may be reproduced, in any form or by any means, without permission in writing from the publisher.

11–25. Solve Prob. 11–24 assuming the supports at A and E are fixed.

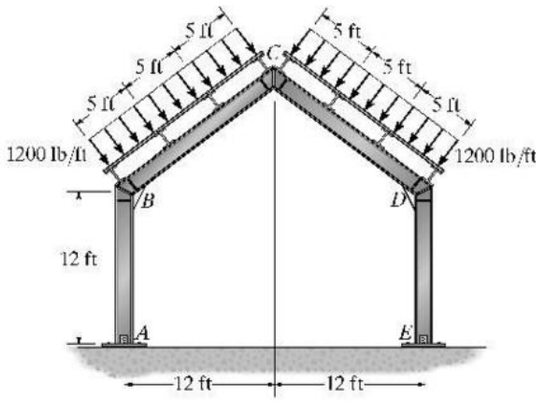

$$(\text{FEM})_{BC} = (\text{FEM})_{CD} = \frac{-2(6)(15)}{9} = -20 \text{ k·ft}$$

$$(\text{FEM})_{CB} = (\text{FEM})_{DC} = 20 \text{ k·ft}$$

$$M_N = 2E\left(\frac{I}{L}\right)(2\theta_N + \theta_F - 3\psi) + (\text{FEM})_N$$

$$M_{AB} = \frac{2EI}{12}(\theta_B)$$

$$M_{BA} = \frac{2EI}{12}(2\theta_B)$$

$$M_{BC} = \frac{2EI}{15}(2\theta_B + \theta_C) - 20$$

$$M_{CB} = \frac{2EI}{15}(2\theta_C + \theta_B) + 20$$

$$M_{CD} = \frac{2EI}{15}(2\theta_C + \theta_D) - 20$$

$$M_{DC} = \frac{2EI}{15}(2\theta_D + \theta_C) + 20$$

$$M_{DE} = \frac{2EI}{12}(2\theta_D)$$

$$M_{ED} = \frac{2EI}{12}(\theta_D)$$

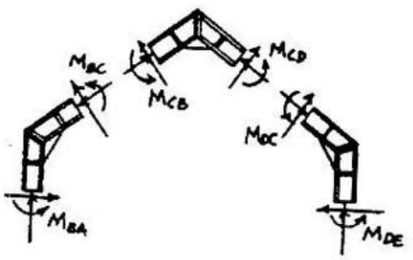

Equilibrium

$$M_{BA} + M_{BC} = 0$$

$$M_{CB} + M_{CD} = 0$$

$$M_{DC} + M_{DE} = 0$$

or.

$$\frac{2EI}{12}(2\theta_B) + \frac{2EI}{15}(2\theta_B + \theta_C) - 20 = 0$$

$$0.6\theta_B + 0.1333\theta_C = \frac{20}{EI}$$

$$\frac{2EI}{15}(2\theta_C + \theta_B) + 20 + \frac{2EI}{15}(2\theta_C + \theta_D) - 20 = 0$$

$$0.5333\theta_C + 0.1333\theta_B + 0.1333\theta_D = 0$$

$$\frac{2EI}{15}(2\theta_D + \theta_C) + 20 + \frac{2EI}{12}(2\theta_D) = 0$$

$$0.6\theta_D + 0.1333\theta_C = -\frac{20}{EI}$$

Solving these equations :

$$\theta_C = 0$$

$$\theta_B = -\theta_D = \frac{33.33}{EI}$$

$M_{AB} = 5.56$ k·ft **Ans**

$M_{BA} = 11.1$ k·ft **Ans**

$M_{BC} = -11.1$ k·ft **Ans**

$M_{CB} = 24.4$ k·ft **Ans**

$M_{CD} = -24.4$ k·ft **Ans**

$M_{DC} = 11.1$ k·ft **Ans**

$M_{DE} = -11.1$ k·ft **Ans**

$M_{ED} = -5.56$ k·ft **Ans**

www.e-kitabi.com

c11.qxd 6/24/08 4:34 PM Page 330

© 2009 by R.C. Hibbeler. Published by Pearson Prentice Hall, Pearson Education, Inc., Upper Saddle River, NJ. All rights reserved. This material is protected under all copyright laws as they currently exist. No portion of this material may be reproduced, in any form or by any means, without permission in writing from the publisher.

11–26. Determine the moment at each joint of the battered-column frame. The supports at A and D are pins. EI is constant.

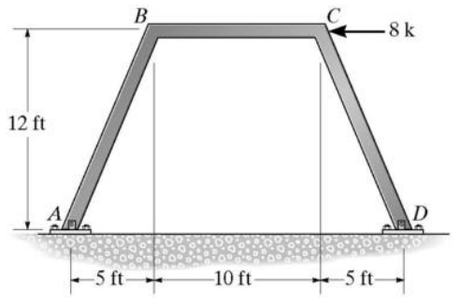

$$(\text{FEM})_{BA} = (\text{FEM})_{BC} = (\text{FEM})_{CB} = (\text{FEM})_{CD} = 0$$

$$\psi_{AB} = \psi_{DC} = \frac{\Delta}{13} \qquad \psi_{BC} = \frac{2\Delta \cos 67.38°}{10}$$

$$\psi_{AB} = \psi_{DC} = \psi_{BC}$$

$$M_N = 3E\left(\frac{I}{L}\right)(\theta_N - \psi) + (\text{FEM})_N$$

$$M_{BA} = 3E\left(\frac{I}{13}\right)(\theta_B + \psi_{AB}) + 0$$

$$M_{BA} = 0.2308EI(\theta_B + \psi_{AB}) \qquad (1)$$

$$M_N = 2E\left(\frac{I}{L}\right)(2\theta_N + \theta_F - 3\psi) + (\text{FEM})_N$$

$$M_{BC} = 2E\left(\frac{I}{10}\right)(2\theta_B + \theta_C - 3\psi_{AB}) + 0$$

$$M_{BC} = 0.2EI(2\theta_B + \theta_C - 3\psi_{AB}) + 0 \qquad (2)$$

$$M_{CB} = 2E\left(\frac{I}{10}\right)(2\theta_C + \theta_B - 3\psi_{AB}) + 0$$

$$M_{CB} = 0.2EI(2\theta_C + \theta_B - 3\psi_{AB}) + 0 \qquad (3)$$

$$M_N = 3E\left(\frac{I}{L}\right)(\theta_N - \psi) + (\text{FEM})_N$$

$$M_{CD} = 3E\left(\frac{I}{13}\right)(\theta_C + \psi_{AB}) + 0$$

$$M_{CD} = 0.2308EI(\theta_C + \psi_{AB}) \qquad (4)$$

Equilibrium

$$M_{BA} + M_{BC} = 0 \qquad (5)$$

$$M_{CD} + M_{CB} = 0 \qquad (6)$$

$$\zeta + \Sigma M_O = 0: \quad \frac{M_{BA}}{13}(26) + \frac{M_{CD}}{13}(26) - 8(12) = 0$$

$$2M_{BA} + 2M_{CD} - 96 = 0 \qquad (7)$$

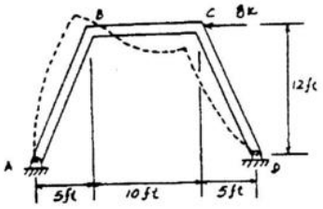

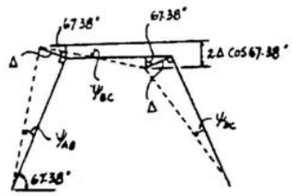

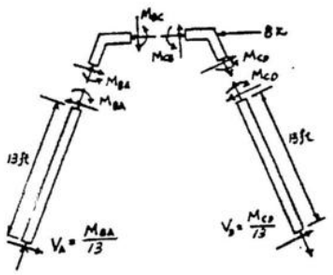

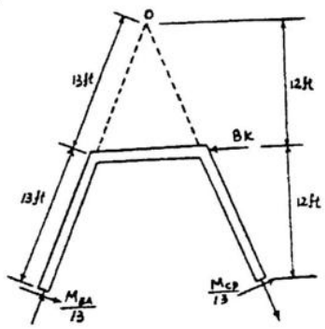

Solving these equations :

$$\theta_B = \theta_C = \frac{32}{EI}$$

$$\psi_{AB} = \frac{72}{EI}$$

$M_{BA} = 24$ k·ft **Ans**

$M_{BC} = -24$ k·ft **Ans**

$M_{CB} = -24$ k·ft **Ans**

$M_{CD} = 24$ k·ft **Ans**

www.e-kitabi.com

c11.qxd 6/24/08 4:34 PM Page 331

© 2009 by R.C. Hibbeler. Published by Pearson Prentice Hall, Pearson Education, Inc., Upper Saddle River, NJ. All rights reserved. This material is protected under all copyright laws as they currently exist. No portion of this material may be reproduced, in any form or by any means, without permission in writing from the publisher.

11–27. For the battered-column frame, determine the moments at each joint and at the fixed supports A and D. EI is constant.

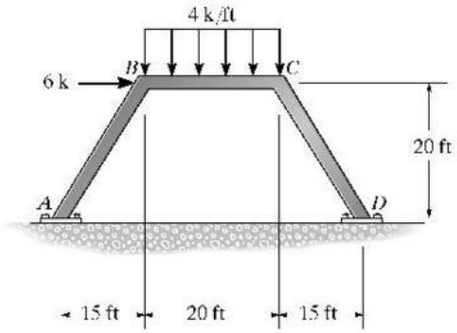

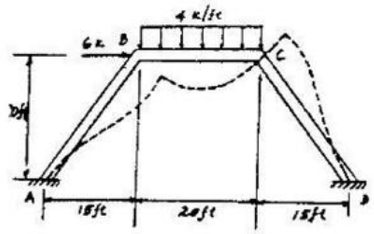

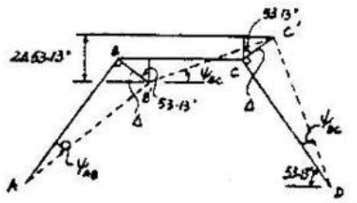

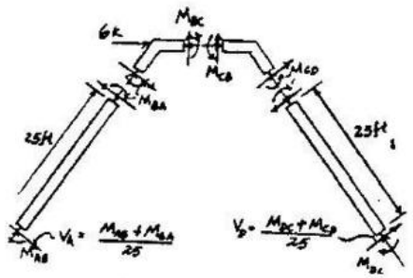

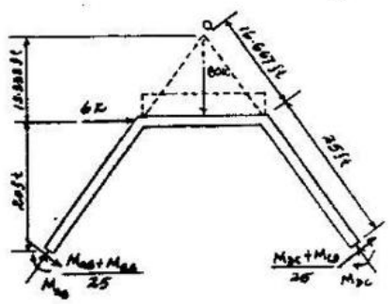

$$\psi_{AB} = \frac{\Delta}{25}, \qquad \psi_{DC} = \frac{\Delta}{25}$$

$$\psi_{BC} = \frac{2\Delta \cos 53.13^\circ}{20} = 0.06\Delta$$

$$\psi_{AB} = \psi_{DC} = 0.6667\psi_{BC} \qquad (1)$$

$$(\text{FEM})_{AB} = (\text{FEM})_{BA} = 0$$

$$(\text{FEM})_{BC} = \frac{-4(20)^2}{12} = -133.33 \text{ k} \cdot \text{ft}$$

$$(\text{FEM})_{CB} = \frac{4(20)^2}{12} = 133.33 \text{ k} \cdot \text{ft}$$

$$(\text{FEM})_{CD} = (\text{FEM})_{DC} = 0$$

$$M_N = 2E\left(\frac{I}{L}\right)(2\theta_N + \theta_F - 3\psi) + (\text{FEM})_N$$

$$M_{AB} = \frac{2EI}{25}(0 + \theta_B - 3\psi_{AB}) + 0 \qquad (2)$$

$$M_{BA} = \frac{2EI}{25}(2\theta_B + 0 - 3\psi_{AB}) + 0 \qquad (3)$$

$$M_{BC} = \frac{2EI}{20}(2\theta_B + \theta_C + 3\psi_{BC}) - 133.3 \qquad (4)$$

$$M_{CB} = \frac{2EI}{20}(2\theta_C + \theta_B + 3\psi_{BC}) + 133.3 \qquad (5)$$

$$M_{CD} = \frac{2EI}{25}(2\theta_C + 0 - 3\psi_{DC}) + 0 \qquad (6)$$

$$M_{DC} = \frac{2EI}{25}(0 + \theta_C - 3\psi_{DC}) + 0 \qquad (7)$$

Equilibrium :

$$M_{BA} + M_{BC} = 0 \qquad (8)$$

$$M_{CB} + M_{CD} = 0 \qquad (9)$$

$$\zeta + \Sigma M_O = 0: \quad \left(\frac{M_{AB} + M_{BA}}{25}\right)(41.667) + \left(\frac{M_{DC} + M_{CD}}{25}\right)(41.667) - M_{AB} - M_{DC} + 6(13.333) = 0$$

$$0.6667M_{AB} + 1.6667M_{BA} + 1.6667M_{CD} + 0.6667M_{DC} = -80 \qquad (10)$$

Solving Eqs. 1 – 10,

$$\theta_B = \frac{487.0}{EI}$$

$$\theta_C = \frac{-538.7}{EI}$$

$$\psi_{AB} = \psi_{CD} = \frac{56.65}{EI}$$

$$\psi_{BC} = \frac{84.98}{EI}$$

$M_{AB} = 25.4 \text{ k} \cdot \text{ft}$ Ans

$M_{BA} = 64.3 \text{ k} \cdot \text{ft}$ Ans

$M_{BC} = -64.3 \text{ k} \cdot \text{ft}$ Ans

$M_{CB} = 99.8 \text{ k} \cdot \text{ft}$ Ans

$M_{CD} = -99.8 \text{ k} \cdot \text{ft}$ Ans

www.e-kitabi.com

© 2009 by R.C. Hibbeler. Published by Pearson Prentice Hall, Pearson Education, Inc., Upper Saddle River, NJ. All rights reserved. This material is protected under all copyright laws as they currently exist. No portion of this material may be reproduced, in any form or by any means, without permission in writing from the publisher.

11–1P. The roof is supported by joists that rest on two girders. Each joist can be considered simply supported, and the front girder can be considered attached to the three columns by a pin at A and rollers at B and C. Assume the roof will be made from 3 in. thick cinder concrete, and each joist has a weight of 550 lb. According to code the roof will be subjected to a snow loading of 25 psf. The joists have a length of 25 ft. Draw the shear and moment diagrams for the girder. Assume the supporting columns are rigid.

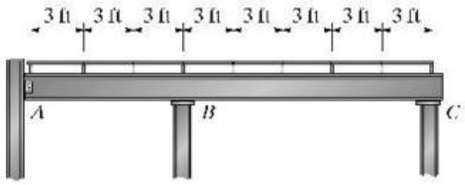

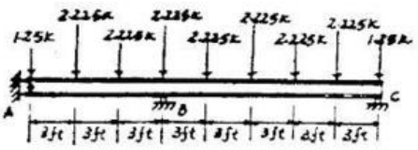

From the text,

Weight of cinder concrete $= (108\ \text{lb/ft}^3)\left(\frac{3}{12}\text{ft}\right) = 27$ psf

Live load $= 25$ psf

Total load $= 52$ psf

Load on joist $= (52\ \text{lb/ft}^2)(3\ \text{ft}) = 156$ lb/ft

Reaction on middle joist $= 156\left(\frac{25}{2}\right) + \frac{550}{2} = 2.225$ k

Reaction on end joist $= \frac{156}{2}\left(\frac{25}{2}\right) + \frac{550}{2} = 1.25$ k

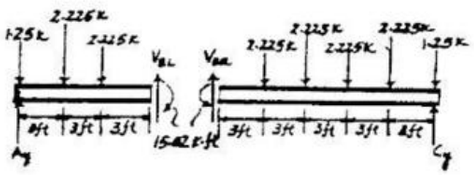

$$(\text{FEM})_{BA} = \frac{PL}{3} = \frac{2.225(9)}{3} = 6.675\ \text{k}\cdot\text{ft}$$

$$(\text{FEM})_{BC} = -\Sigma\frac{P}{L^2}\left(b^2a + \frac{a^2b}{2}\right) = \frac{2.225}{(15)^2}\left[((3)^2(12) + \frac{(12)^2(3)}{2}\right] + \left[(6)^2(9) + \frac{(9)^2(6)}{2}\right]$$

$$+ [(9)^2(6) + \frac{(6)^2(9)}{2}] + [(12)^2(3) + \frac{(3)^2(12)}{2}] = -20.025\ \text{k}\cdot\text{ft}$$

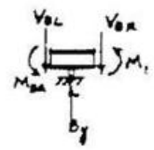

$$M_N = \frac{3EI}{L}(\theta_N - \psi) + (\text{FEM})_N$$

$$M_{BA} = \frac{3EI}{9}(\theta_B - 0) + 6.675$$

$$M_{BC} = \frac{3EI}{15}(\theta_B - 0) - 20.025$$

$$M_{BA} + M_{BC} = 0$$

$$\frac{3EI}{9}\theta_B + 6.675 + \frac{3EI}{15}(\theta_B) - 20.025 = 0$$

$$\theta_B = \frac{25.03}{EI}$$

$$M_{BA} = \frac{3EI}{9}\left(\frac{25.03}{EI}\right) + 6.675 = 15.02\ \text{k}\cdot\text{ft}$$

$$M_{BC} = \frac{3EI}{15}\left(\frac{25.03}{EI}\right) - 20.025 = -15.02\ \text{k}\cdot\text{ft}$$

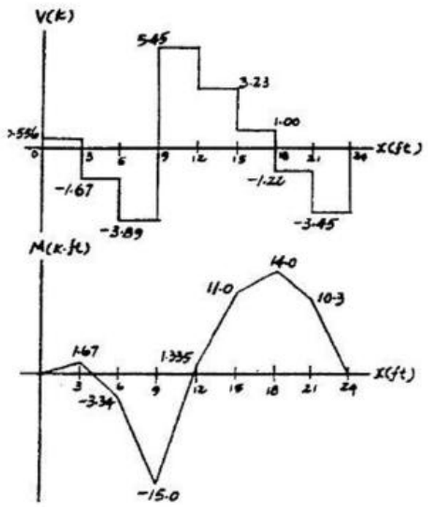

$$\circlearrowleft + \Sigma M_B = 0;\ -15.02 + 2.225(3) + 2.225(6) + 1.250(9) - A_y(9) = 0$$

$$A_y = 1.806\ \text{k}$$

$$+\uparrow \Sigma F_y = 0;\ 1.806 - 1.250 - 2.225(2) + V_{B_L} = 0$$

$$V_{B_L} = 3.894\ \text{k}$$

$$\circlearrowleft + \Sigma M_B = 0;\ C_y(15) - 2.225(3) - 2.225(6) - 2.225(9) - 2.225(12) - 1.250(15) + 15.019 = 0$$

$$C_y = 4.699\ \text{k}$$

$$+\uparrow \Sigma F = 0;\ V_{B_R} - 4(2.225) - 1.250 + 4.699 = 0$$

$$V_{B_R} = 5.45\ \text{k}$$

$M_{max} = 14.0$ k.ft **Ans**

www.e-kitabi.com

c12.qxd 6/24/08 4:42 PM Page 333

© 2009 by R.C. Hibbeler. Published by Pearson Prentice Hall, Pearson Education, Inc., Upper Saddle River, NJ. All rights reserved. This material is protected under all copyright laws as they currently exist. No portion of this material may be reproduced, in any form or by any means, without permission in writing from the publisher.

12–1. Determine the moments at A, B, and C, then draw the moment diagram for the beam. The moment of inertia of each span is indicated in the figure. Assume the support at B is a roller and A and C are fixed. $E = 29(10^3)$ ksi.

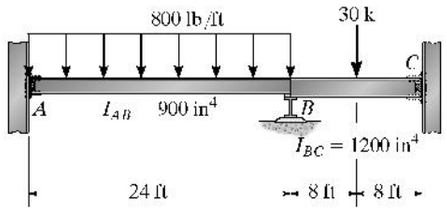

$$(DF)_{AB} = 0 \qquad (DF)_{BA} = \frac{0.75I_{BC}/24}{0.75I_{BC}/24 + I_{BC}/16} = 0.3333$$

$$(DF)_{BC} = 0.6667 \qquad (DF)_{CB} = 0$$

$$(FEM)_{AB} = \frac{-0.8(24)^2}{12} = -38.4\ \text{k}\cdot\text{ft}$$

$$(FEM)_{BA} = 38.4\ \text{k}\cdot\text{ft}$$

$$(FEM)_{BC} = -\frac{30(16)}{8} = -60.0\ \text{k}\cdot\text{ft}$$

$$(FEM)_{CB} = 60.0\ \text{k}\cdot\text{ft}$$

Joint	A		B		C
Mem.	AB	BA	BC	CB	
DF	0	0.3333	0.6667	0	
FEM	−38.4	38.4	−60.0	60.0	
		7.20	14.40		
	3.60			7.20	
ΣM	−34.8	45.6	−45.6	67.2 k·ft	**Ans**

$M_{AB} = -34.8$ k ft **Ans**
$M_{BA} = 45.6$ k ft **Ans**
$M_{BC} = -45.6$ k ft **Ans**
$M_{CB} = 67.2$ k ft **Ans**

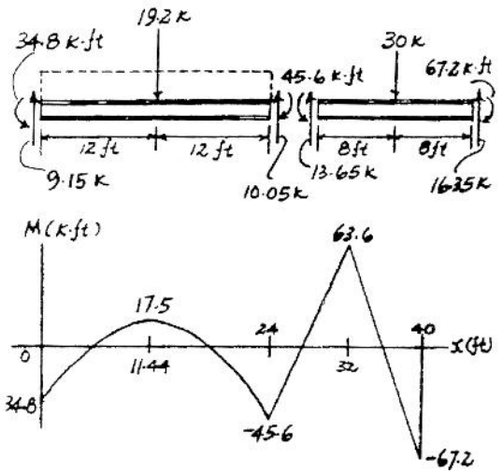

www.e-kitabi.com

c12.qxd 6/24/08 4:42 PM Page 334

© 2009 by R.C. Hibbeler. Published by Pearson Prentice Hall, Pearson Education, Inc., Upper Saddle River, NJ. All rights reserved. This material is protected under all copyright laws as they currently exist. No portion of this material may be reproduced, in any form or by any means, without permission in writing from the publisher.

12–2. Determine the moments at A, B, and C, then draw the moment diagram for the beam. Assume the supports at A and C are fixed. EI is constant.

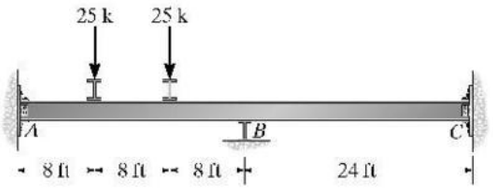

$$\text{FEM}_{BC} = 0$$

$$\text{FEM}_{AB} = \frac{2PL}{9} = \frac{2(25\text{ k})(24\text{ ft})}{9} = 133.333\text{ k}\cdot\text{ft}$$

Joint	A	B		C
Member	AB	BA	BC	CB
DF	0	0.5	0.5	0
FEM	−133.333	133.333		
		−66.667	−66.667	
	−33.333			−33.333
ΣM	−166.667	66.667	−66.667	−33.333

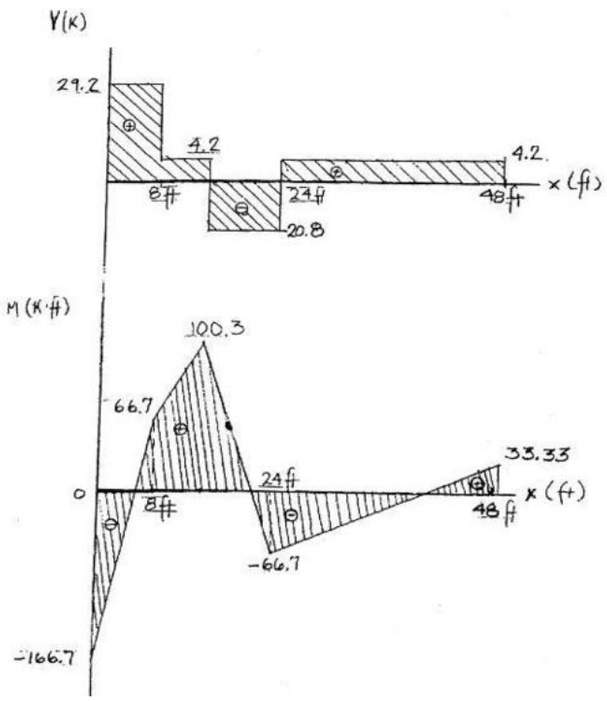

$M_{AB} = -167\text{ k ft}$ **Ans**
$M_{BA} = 66.7\text{ k ft}$ **Ans**
$M_{BC} = -66.7\text{ k ft}$ **Ans**
$M_{CB} = -33.3\text{ k ft}$ **Ans**

www.e-kitabi.com

c12.qxd 6/24/08 4:42 PM Page 335

© 2009 by R.C. Hibbeler. Published by Pearson Prentice Hall, Pearson Education, Inc., Upper Saddle River, NJ. All rights reserved. This material is protected under all copyright laws as they currently exist. No portion of this material may be reproduced, in any form or by any means, without permission in writing from the publisher.

12–3. Determine the internal moment in the beam at B, then draw the moment diagram. Assume C is a pin. Segment AB has a moment of inertia of $I_{AB} = 0.75\,I_{BC}$. EI is constant.

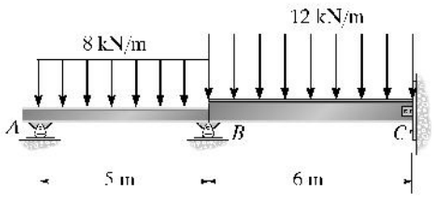

$(DF)_{AB} = 1 \quad (DF)_{BA} = \dfrac{0.75I_{BC}/5}{0.75I_{BC}/5 + I_{BC}/6} = 0.4737$

$(DF)_{BC} = 0.5263 \quad (DF)_{CB} = 1$

$(FEM)_{AB} = \dfrac{-8(5)^2}{12} = -16.667\ \text{kN}\cdot\text{m}$

$(FEM)_{BA} = 16.667\ \text{kN}\cdot\text{m}$

$(FEM)_{BC} = -\dfrac{12(6)^2}{12} = -36\ \text{kN}\cdot\text{m}$

$(FEM)_{CB} = 36\ \text{kN}\cdot\text{m}$

Joint	A	B		C
Mem	AB	BA	BC	CB
DF	1	0.4737	0.5263	1
FEM	−16.667	16.667	−36.0	36.0
	16.667	9.158	10.175	−36.0
		8.333	−18.0	
		4.579	5.088	
ΣM	0	38.7	−38.7	0 kN·m

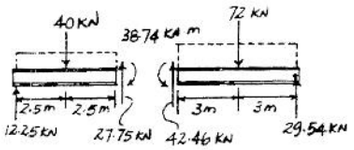

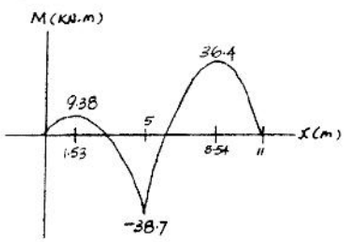

$M_B = -38.7\ \text{kN m}$ Ans

***12–4.** Determine the moments at A, B, and C, then draw the moment diagram. Assume the support at B is a roller and A and C are fixed. EI is constant.

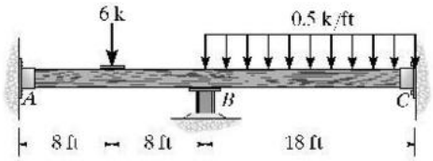

$(DF)_{AB} = 0 \quad (DF)_{BA} = \dfrac{I/16}{I/16 + I/18} = 0.5294$

$(DF)_{BC} = 0.4706 \quad (DF)_{CB} = 0$

$(FEM)_{AB} = \dfrac{6(16)}{8} = -12.0\ \text{k}\cdot\text{ft}$

$(FEM)_{BA} = 12.0\ \text{k}\cdot\text{ft}$

$(FEM)_{BC} = \dfrac{-(0.5)(18)^2}{12} = -13.5\ \text{k}\cdot\text{ft}$

$(FEM)_{CB} = 13.5\ \text{k}\cdot\text{ft}$

Joint	A	B		C
Mem.	AB	BA	BC	CB
DF	0	0.5294	0.4706	0
FEM	−12.0	12.0	−13.5	13.5
		0.794	0.706	
	0.397			0.353
ΣM	−11.6	12.8	−12.8	13.8 k·ft

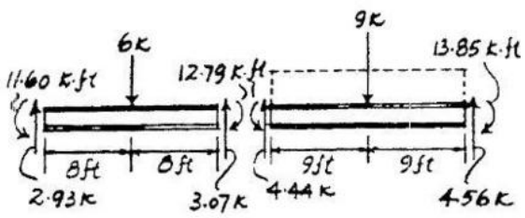

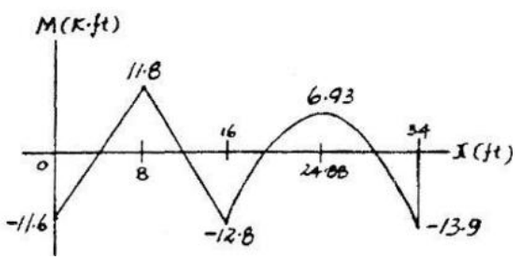

$M_{AB} = -11.6\ \text{k ft}$ **Ans**

$M_{BA} = 12.8\ \text{k ft}$ **Ans**

$M_{BC} = -12.8\ \text{k ft}$ **Ans**

$M_{CB} = 13.8\ \text{k ft}$ **Ans**

www.e-kitabi.com

c12.qxd 6/24/08 4:42 PM Page 336

© 2009 by R.C. Hibbeler. Published by Pearson Prentice Hall, Pearson Education, Inc., Upper Saddle River, NJ. All rights reserved. This material is protected under all copyright laws as they currently exist. No portion of this material may be reproduced, in any form or by any means, without permission in writing from the publisher.

12–5. Determine the moments at A, B, and C, then draw the moment diagram for the beam. Assume the supports at A and C are fixed and B is a roller. EI is constant.

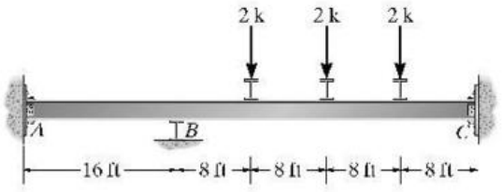

$$\text{FEM} = \frac{15PL}{48} = \frac{15(2)(32)}{48} = 20 \text{ k·ft}$$

$$\text{FEM}_{BC} = -20 \text{ k·ft} \qquad \text{FEM}_{CB} = 20 \text{ k·ft}$$

Joint	A	B		C
Member	AB	BA	BC	CB
DF	0	0.667	0.333	0
FEM			−20	20
		13.33	6.67	
	6.67			3.34
	6.67	13.33	−13.33	23.34

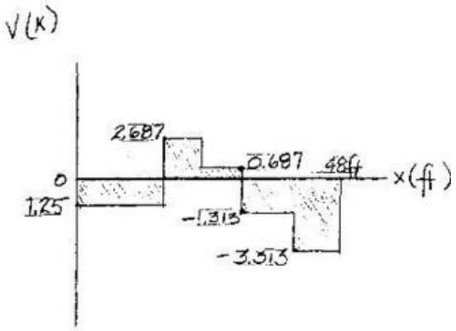

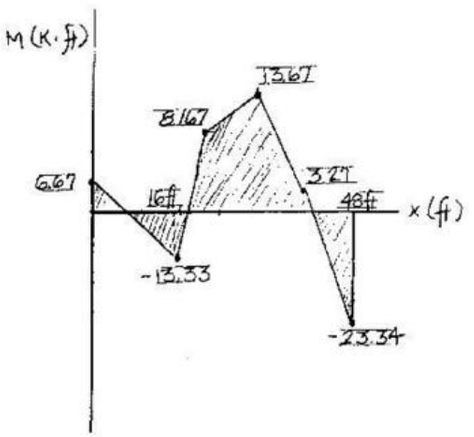

$M_{AB} = 6.67$ k ft **Ans**
$M_{BA} = 13.3$ k ft **Ans**
$M_{BC} = -13.3$ k ft **Ans**
$M_{CB} = 23.3$ k ft **Ans**

www.e-kitabi.com

c12.qxd 6/24/08 4:42 PM Page 337

© 2009 by R.C. Hibbeler. Published by Pearson Prentice Hall, Pearson Education, Inc., Upper Saddle River, NJ. All rights reserved. This material is protected under all copyright laws as they currently exist. No portion of this material may be reproduced, in any form or by any means, without permission in writing from the publisher.

12–6. Determine the moments at A, B, and C, then draw the moment diagram for the girder DE. Assume the support at B is a pin and A and C are rollers. The distributed load rests on simply supported floor boards that transmit the load to the floor beams. EI is constant.

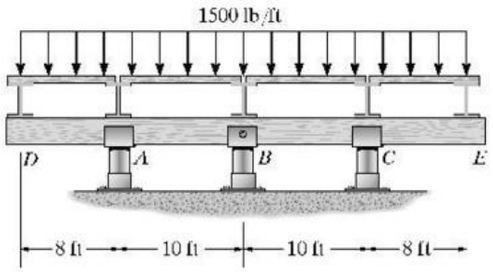

$(DF)_{AD} = (DF)_{CE} = 0$

$(DF)_{AB} = (DF)_{CB} = 1 \quad (DF)_{BA} = (DF)_{BC} = 0.5$

$(FEM)_{AD} = 48 \text{ k}\cdot\text{ft}$

$(FEM)_{CE} = -48 \text{ k}\cdot\text{ft}$

Joint	A		B		C	
Member	AD	AB	BA	BC	CB	CE
DF	0	1	0.5	0.5	1	0
FEM	48					−48
		−48			48	
			−24	24		
	48	−48	−24	24	48	−48 k·ft

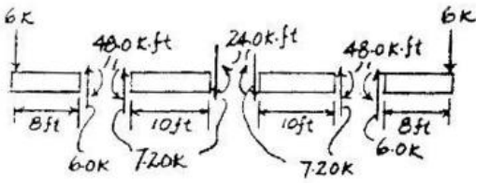

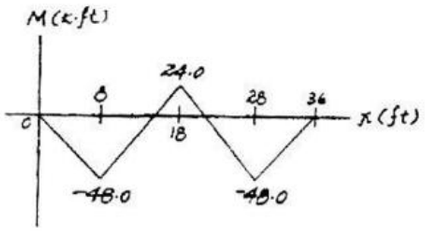

$M_{AD} = 48 \text{ k ft}$ **Ans**

$M_{AB} = -48 \text{ k ft}$ **Ans**

$M_{BA} = -24 \text{ k ft}$ **Ans**

$M_{BC} = 24 \text{ k ft}$ **Ans**

$M_{CB} = 48 \text{ k ft}$ **Ans**

$M_{CE} = -48 \text{ k ft}$ **Ans**

12–7. Determine the moment at B, then draw the moment diagram for the beam. Assume the support at A is pinned, B is a roller and C is fixed. EI is constant.

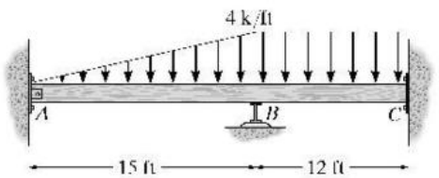

$$\text{FEM}_{AB} = \frac{wL^2}{30} = \frac{4(15^2)}{30} = 30 \text{ k}\cdot\text{ft}$$

$$\text{FEM}_{BA} = \frac{wL^2}{20} = \frac{4(15^2)}{20} = 45 \text{ k}\cdot\text{ft}$$

$$\text{FEM}_{BC} = \frac{wL^2}{12} = \frac{(4)(12^2)}{12} = 48 \text{ k}\cdot\text{ft}$$

$\text{FEM}_{CB} = 48 \text{ k}\cdot\text{ft}$

Joint	A	B		C
Member	AB	BA	BC	CB
DF	1	0.375	0.625	0
FEM	−30	45	−48	48
	30	1.125	1.875	
		15		0.9375
		−5.625	−9.375	
				−4.688
ΣM	0	55.5	−55.5	44.25

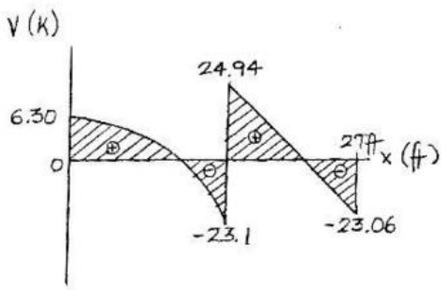

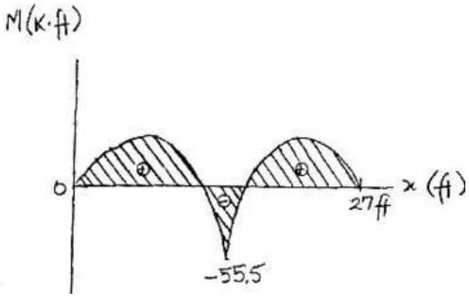

$M_B = -55.5 \text{ k ft}$ **Ans**

www.e-kitabi.com

c12.qxd 6/24/08 4:42 PM Page 338

© 2009 by R.C. Hibbeler. Published by Pearson Prentice Hall, Pearson Education, Inc., Upper Saddle River, NJ. All rights reserved. This material is protected under all copyright laws as they currently exist. No portion of this material may be reproduced, in any form or by any means, without permission in writing from the publisher.

***12–8.** Determine the moments at A and B, then draw the moment diagram. Assume the support at B is a roller, C is a pin, and A is fixed.

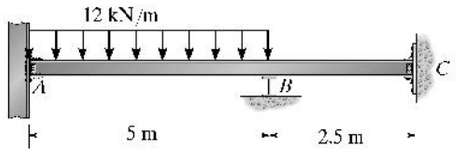

$$(DF)_{AB} = 0 \quad (DF)_{BA} = \frac{4I/5}{4I/5 + 3I/2.5} = 0.4$$

$$(DF)_{BC} = 0.6 \quad (DF)_{CB} = 1$$

$$(FEM)_{AB} = \frac{-12(5)^2}{12} = -25 \text{ kN} \cdot \text{m}$$

$$(FEM)_{BA} = 25 \text{ kN} \cdot \text{m}$$

$$(FEM)_{BC} = (FEM)_{CB} = 0$$

Joint	A		B	C
Mem.	AB	BA	BC	CB
DF	0	0.4	0.6	1
FEM	−25	25		
		−10	−15	
	−5			
ΣM	−30	15	−15	0

$M_{AB} = -30$ kN m **Ans**

$M_{BA} = 15$ kN m **Ans**

$M_{BC} = -15$ kN m **Ans**

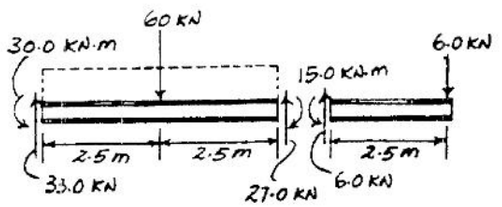

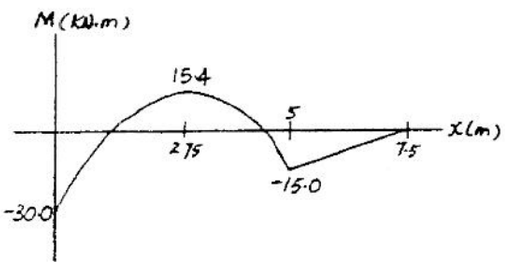

www.e-kitabi.com

c12.qxd 6/24/08 4:42 PM Page 339

© 2009 by R.C. Hibbeler. Published by Pearson Prentice Hall, Pearson Education, Inc., Upper Saddle River, NJ. All rights reserved. This material is protected under all copyright laws as they currently exist. No portion of this material may be reproduced, in any form or by any means, without permission in writing from the publisher.

12–9. The bar is pin connected at each indicated point. If the normal force in the bar can be neglected, determine the vertical reaction at each pin. EI is constant.

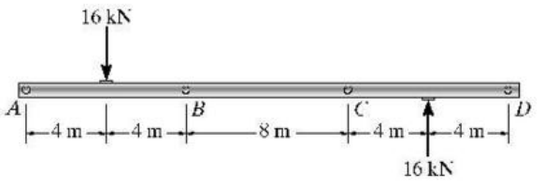

Use antisymmetric load and symmetric beam.

$$K_{BA} = \frac{3EI}{8} \qquad K_{BC} = \frac{6EI}{8}$$

$$(DF)_{BA} = \frac{\frac{3EI}{8}}{\frac{3EI}{8} + \frac{6EI}{8}} = 0.3333$$

$$(DF)_{BC} = \frac{\frac{6EI}{8}}{\frac{3EI}{8} + \frac{6EI}{8}} = 0.6667$$

$$FEM_{BA} = \frac{(3)(16)(8)}{16} = 24 \text{ kN}\cdot\text{m}$$

Joint	A	B		
Member	AB	BA	BC	
DF	1	0.3333	0.6667	
FEM		24		
		−8	−16	
ΣM	0	16	−16	kN·m

Segment AB:

$$\zeta + \Sigma M_B = 0: \quad -A_y(8) + 16(4) - 16 = 0 \qquad A_y = 6 \text{ kN} \quad \textbf{Ans}$$
$$\uparrow + \Sigma F_y = 0: \quad -V_{BL} + 6 - 16 = 0 \qquad V_{BL} = 10 \text{ kN}$$

Segment BC:

$$\zeta + \Sigma M_C = 0: \quad -V_{BR}(8) + 16 + 16 = 0 \qquad V_{BR} = 4 \text{ kN}$$
$$\uparrow + \Sigma F_y = 0: \quad -V_{CL} - 4 = 0 \qquad V_{CL} = 4 \text{ kN}$$

Segment CD:

$$\zeta + \Sigma M_C = 0: \quad -D_y(8) + 16(4) - 16 = 0 \qquad D_y = 6 \text{ kN} \quad \textbf{Ans}$$
$$\uparrow + \Sigma F_y = 0: \quad -V_{CR} - 6 + 16 = 0 \qquad V_{CR} = 10 \text{ kN}$$

$$B_y = V_{BL} + V_{BR} = 10 + 4 = 14 \text{ kN} \quad \textbf{Ans}$$

$$C_y = V_{CL} + V_{CR} = 4 + 10 = 14 \text{ kN} \quad \textbf{Ans}$$

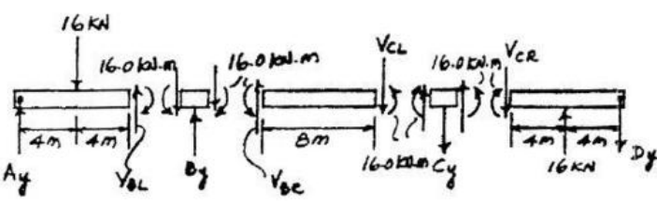

www.e-kitabi.com

c12.qxd 6/24/08 4:43 PM Page 340

© 2009 by R.C. Hibbeler. Published by Pearson Prentice Hall, Pearson Education, Inc., Upper Saddle River, NJ. All rights reserved. This material is protected under all copyright laws as they currently exist. No portion of this material may be reproduced, in any form or by any means, without permission in writing from the publisher.

12–10. Determine the moments at the supports, then draw the moment diagram. Assume A and D are fixed. EI is constant.

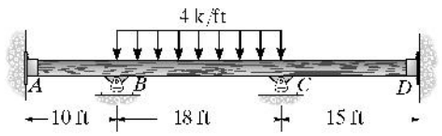

$(DF)_{AB} = 0 \quad (DF)_{BA} = \dfrac{1/10}{1/10 + 1/18} = 0.6429$

$(DF)_{BC} = 0.3571 \quad (DF)_{CB} = \dfrac{1/18}{1/18 + 1/15} = 0.4545$

$(DF)_{CD} = 0.5455 \quad (DF)_{DC} = 0$

$(FEM)_{AB} = (FEM)_{BA} = 0$

$(FEM)_{BC} = -\dfrac{4(18)^2}{12} = -108 \text{ k} \cdot \text{ft}$

$(FEM)_{CB} = 108 \text{ k} \cdot \text{ft}$

$(FEM)_{CD} = (FEM)_{DC} = 0$

Joint	A	B		C		D
Mem	AB	BA	BC	CB	CD	DC
DF	0	0.6429	0.3571	0.4545	0.5455	0
FEM			−108	108		
		69.43	38.57	−49.09	−58.91	
	34.72		−24.54	19.28		−29.46
		15.78	8.76	−8.76	−10.52	
	7.89		−4.38	4.38		−5.26
		2.82	1.56	−1.99	−2.39	
	1.41		−1.00	0.78		−1.20
		0.64	0.36	−0.35	−0.43	
	0.32		−0.18	0.18		−0.21
		0.11	0.06	−0.08	−0.10	
	0.06		−0.04	0.03		−0.05
		0.03	0.01	−0.01	−0.02	
ΣM	44.4	88.8	−88.8	72.4	−72.4	−36.2

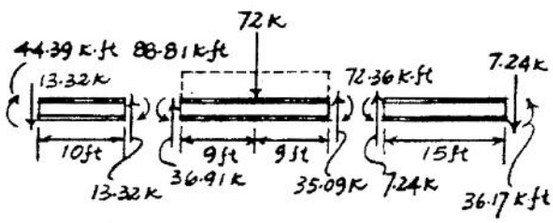

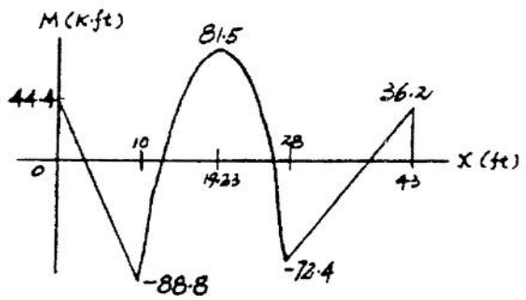

$M_{AB} = 44.4$ k ft **Ans.**
$M_{BA} = 88.8$ k ft **Ans.**
$M_{BC} = -88.8$ k ft **Ans.**
$M_{CB} = 72.4$ k ft **Ans.**
$M_{CD} = -72.4$ k ft **Ans.**
$M_{DC} = -36.2$ k ft **Ans.**

www.e-kitabi.com

c12.qxd 6/24/08 4:43 PM Page 341

© 2009 by R.C. Hibbeler. Published by Pearson Prentice Hall, Pearson Education, Inc., Upper Saddle River, NJ. All rights reserved. This material is protected under all copyright laws as they currently exist. No portion of this material may be reproduced, in any form or by any means, without permission in writing from the publisher.

12–11. Determine the moment at B, then draw the moment diagram for each member of the frame. Assume the support at A is a pin and C is fixed. EI is constant.

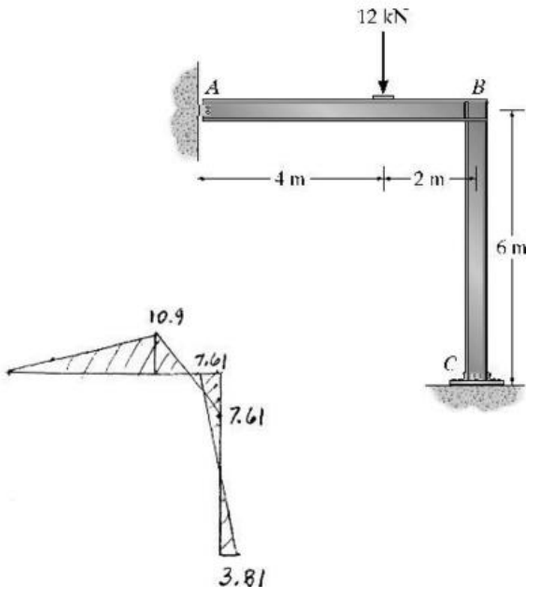

$$\text{FEM}_{BA} = \left(\frac{P}{L^2}\right)\left(b^2a + \frac{a^2b}{2}\right) = \left(\frac{12}{6^2}\right)\left((4)^2(2) + \frac{(2)^2(4)}{2}\right) = 13.33 \text{ kN}\cdot\text{m}$$

Joint	A	B		C
Member	AB	BA	BC	CB
DF	1	0.429	0.571	0
FEM	0	13.33	0	0
		−5.72	−7.61	
				−3.81
ΣM	0	7.61	−7.61	−3.81

$M_B = -7.61$ kN m **Ans**

***12–12.** Determine the moments acting at the ends of each member, then draw the moment diagram. Assume B is a fixed joint and A and D are pin supported and C is fixed. $E = 29(10^3)$ ksi, $I_{ABC} = 700$ in^4, and $I_{BD} = 1100$ in^4.

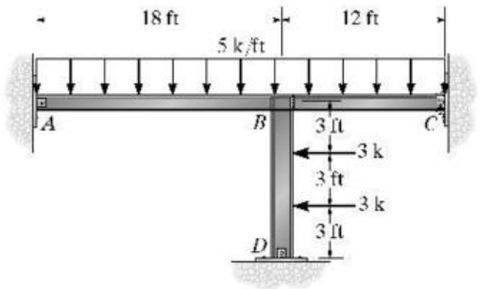

$$(\text{DF})_{AB} = (\text{DF})_{DB} = 1 \qquad (\text{DF})_{CB} = 0$$

$$(\text{DF})_{BA} = \frac{3(I_{ABC})/18}{3(I_{ABC})/18 + 4(I_{ABC})/12 + 3(1.5714I_{ABC})/9} = 0.1628$$

$$(DF)_{BC} = 0.3256$$

$$(DF)_{BD} = 0.5116$$

$$(\text{FEM})_{AB} = \frac{-5(18)^2}{12} = -135 \text{ k}\cdot\text{ft}$$

$$(\text{FEM})_{BA} = 135 \text{ k}\cdot\text{ft}$$

$$(\text{FEM})_{BC} = \frac{-5(12)^2}{12} = -60 \text{ k}\cdot\text{ft}$$

$$(\text{FEM})_{CB} = 60 \text{ k}\cdot\text{ft}$$

$$(\text{FEM})_{BD} = \frac{-2(3)(9)}{9} = -6.0 \text{ k}\cdot\text{ft}$$

$$(\text{FEM})_{DB} = 6.0 \text{ k}\cdot\text{ft}$$

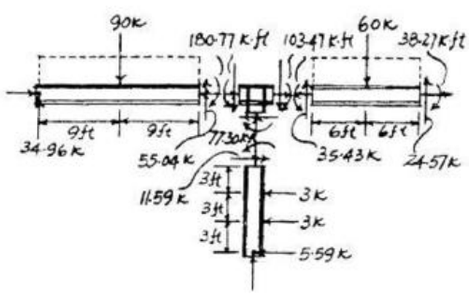

Joint	A		B		C	D
Mem.	AB	BA	BD	BC	CB	DB
DF	1	0.1628	0.5116	0.3256	0	1
FEM	−135	135	−6.0	−60	60	6.0
	135	−11.23	−35.30	22.47		−6.0
		67.5	−3.0		−11.23	
		−10.5	−33.00	−21.00		
					−10.5	
ΣM	0	181	−77.3	−103	38.3	0

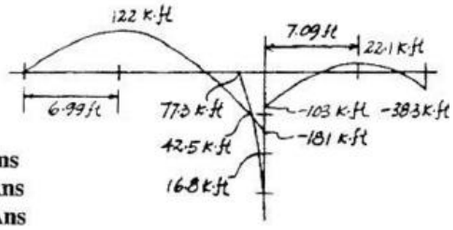

$M_{AB} = 0$ **Ans**

$M_{BA} = 181$ k ft **Ans**

$M_{BD} = -77.3$ k ft **Ans**

$M_{BC} = -103$ k ft **Ans**

$M_{CB} = 38.3$ k ft **Ans**

$M_{DB} = 0$ **Ans**

www.e-kitabi.com

c12.qxd 6/24/08 4:43 PM Page 342

© 2009 by R.C. Hibbeler. Published by Pearson Prentice Hall, Pearson Education, Inc., Upper Saddle River, NJ. All rights reserved. This material is protected under all copyright laws as they currently exist. No portion of this material may be reproduced, in any form or by any means, without permission in writing from the publisher.

12–13. Determine the internal moments acting at each joint. Assume A, D, and E are pinned and B and C are fixed joints. The moment of inertia of each member is listed in the figure. $E = 29(10^3)$ ksi.

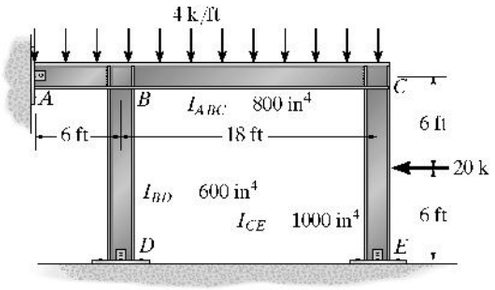

$$(DF)_{AB} = 1$$

$$(DF)_{BA} = \frac{3(I_{ABC})/6}{3(I_{ABC})/6 + 4(I_{ABC})/18 + 3(0.75I_{ABC})/12} = 0.5496$$

$$(DF)_{BC} = 0.2443$$

$$(DF)_{BD} = 0.2061$$

$$(DF)_{CB} = \frac{4(I_{ABC})/18}{4(I_{ABC})/18 + 3(1.25I_{ABC})/12} = 0.4156$$

$$(DF)_{CE} = 0.5844$$

$$(DF)_{DB} = (DF)_{EC} = 1$$

$$(FEM)_{AB} = -\frac{4(6)^2}{12} = -12.0\ \text{k}\cdot\text{ft}$$

$$(FEM)_{BA} = 12.0\ \text{k}\cdot\text{ft}$$

$$(FEM)_{BC} = \frac{-4(18)^2}{12} = -108\ \text{k}\cdot\text{ft}$$

$$(FEM)_{CB} = 108\ \text{k}\cdot\text{ft}$$

$$(FEM)_{CE} = -\frac{20(12)}{8} = -30.0\ \text{k}\cdot\text{ft}$$

$$(FEM)_{EC} = 30.0\ \text{k}\cdot\text{ft}$$

$$(FEM)_{BD} = (FEM)_{DB} = 0$$

Joint	A		B			C		E	D
Mem.	AB	BA	BD	BC	CB	CE	EC	DB	
DF	1	0.5496	0.2061	0.2443	0.4156	0.5844	1	1	
FEM	−12.0	12.0		−108	108	−30	30		
	12.0	52.76	19.79	23.45	−32.42	−45.58	−30		
		6.0		−16.21	11.73	−15.0			
		5.61	2.10	2.49	1.36	1.91			
				0.68	1.25				
		−0.37	−0.14	−0.17	−0.52	−0.73			
				−0.26	−0.08				
		0.14	0.05	0.06	0.03	0.05			
ΣM	0	76.2	21.8	−98.0	89.4	−89.4	0	0	

$M_{AB} = 0$ **Ans**
$M_{BA} = 76.2$ k ft **Ans**
$M_{BD} = 21.8$ k ft **Ans**
$M_{BC} = -98.0$ k ft **Ans**
$M_{CB} = 89.4$ k ft **Ans**
$M_{CE} = -89.4$ k ft **Ans**
$M_{EC} = 0$ **Ans**
$M_{DB} = 0$ **Ans**

www.e-kitabi.com

c12.qxd 6/24/08 4:43 PM Page 343

© 2009 by R.C. Hibbeler. Published by Pearson Prentice Hall, Pearson Education, Inc., Upper Saddle River, NJ. All rights reserved. This material is protected under all copyright laws as they currently exist. No portion of this material may be reproduced, in any form or by any means, without permission in writing from the publisher.

12–14. Determine the moments at A, C, and D, then draw the moment diagram for each member of the frame. Support A and joints C and D are fixed connected. EI is constant.

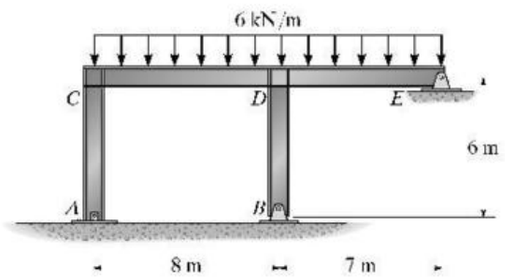

$\text{FEM}_{AC} = 0 \qquad \text{FEM}_{BD} = 0$

$$\text{FEM}_{CD} = \frac{wL^2}{12} = \frac{6(8^2)}{12} = 32 \text{ kN}\cdot\text{m} = \text{FEM}_{DC}$$

$$\text{FEM}_{DE} = \frac{wL^2}{8} = \frac{6(7^2)}{8} = 36.75 \text{ kN}\cdot\text{m}$$

$\text{FEM}_{CB} = 48 \text{ k}\cdot\text{ft}$

Joint	A	B	C		D		E	
Member	AC	BD	CA	CD	DC	DB	DE	ED
DF	0	1	0.5714	0.4286	0.35	0.35	0.3	1
FEM				−32	32		−36.75	
			18.285	13.7152	1.6625	1.6625	1.425	
	9.1425			0.83125	6.8576			
			−0.47498	−0.3563	−2.400	−2.4	−2.057	
	−0.23749			−1.2	−0.17815			
			0.6868	0.51432	0.06235	0.06235	0.0534	
ΣM	8.905		18.50	−18.50	38.0	−0.67515	−37.33	

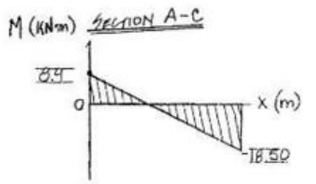

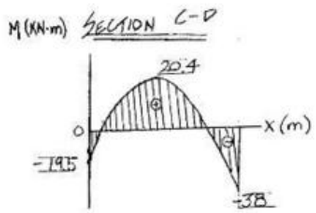

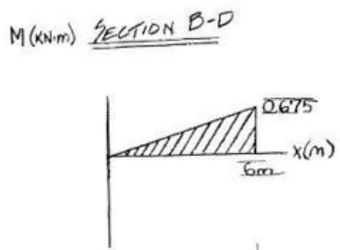

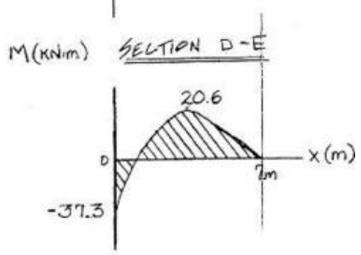

$M_{AC} = 8.91$ kN m **Ans**
$M_{BD} = 0$ **Ans**
$M_{CA} = 18.5$ kN m **Ans**
$M_{CD} = -18.5$ kN m **Ans**
$M_{DC} = 38$ kN m **Ans**
$M_{DE} = -0.675$ kN m **Ans**
$M_{DE} = -37.3$ kN m **Ans**
$M_{ED} = 0$ **Ans**

www.e-kitabi.com

c12.qxd 6/24/08 4:43 PM Page 344

© 2009 by R.C. Hibbeler. Published by Pearson Prentice Hall, Pearson Education, Inc., Upper Saddle River, NJ. All rights reserved. This material is protected under all copyright laws as they currently exist. No portion of this material may be reproduced, in any form or by any means, without permission in writing from the publisher.

12–15. Determine the moment at B, then draw the moment diagram for each member of the frame. Support A is pinned. EI is constant.

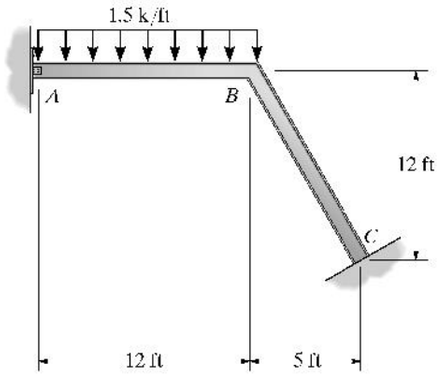

$$\text{FEM}_{BC} = 0$$

$$\text{FEM}_{BA} = \frac{wL^2}{8} = \frac{1.5(12^2)}{8} = 27 \text{ k·ft}$$

Joint	A	B		C
Member	AB	BA	BC	CB
DF	1	0.44828	0.55172	0
FEM		27		
		−12.103	−14.897	
				−7.4485
ΣM	0	14.897	−14.897	−7.4485

$M_B = -14.9$ k ft **Ans**

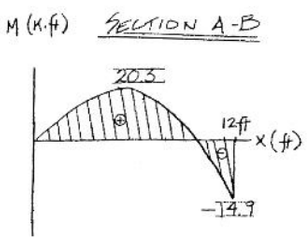

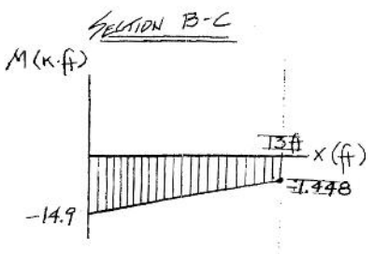

www.e-kitabi.com

c12.qxd 6/24/08 4:43 PM Page 345

© 2009 by R.C. Hibbeler. Published by Pearson Prentice Hall, Pearson Education, Inc., Upper Saddle River, NJ. All rights reserved. This material is protected under all copyright laws as they currently exist. No portion of this material may be reproduced, in any form or by any means, without permission in writing from the publisher.

***12–16.** Determine the moments acting at the ends of each member of the frame. *EI* is the constant.

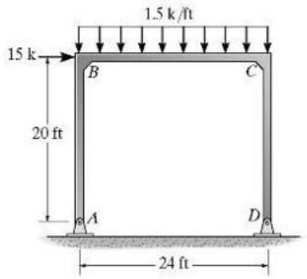

Consider no sideway

$(DF)_{AB} = (DF)_{DC} = 1$

$(DF)_{BA} = (DF)_{CD} = \dfrac{3I/20}{3I/20 + 4I/24} = 0.4737$

$(DF)_{BC} = (DF)_{CB} = 0.5263$

$(FEM)_{AB} = (FEM)_{BA} = 0$

$(FEM)_{BC} = \dfrac{-1.5(24)^2}{12} = -72\ \text{k}\cdot\text{ft}$

$(FEM)_{CB} = 72\ \text{k}\cdot\text{ft}$

$(FEM)_{CD} = (FEM)_{DC} = 0$

Joint	A	B		C		D
Mem	AB	BA	BC	CB	CD	DC
DF	1	0.4737	0.5263	0.5263	0.4737	1
FEM			−72.0	72.0		
		34.11	37.89	−37.89	−34.11	
			−18.95	18.95		
		8.98	9.97	−9.97	−8.98	
			−4.98	4.98		
		2.36	2.62	−2.62	−2.36	
			−1.31	1.31		
		0.62	0.69	−0.69	−0.62	
			−0.35	0.35		
		0.16	0.18	−0.18	−0.16	
			−0.09	0.09		
		0.04	0.05	−0.05	−0.04	
			−0.02	0.02		
		0.01	0.01	−0.01	−0.01	
ΣM		46.28	−46.28	46.28	−46.28	

$\overset{+}{\rightarrow} \Sigma F_x = 0$ (for the frame without sidesway)

$R + 2.314 - 2.314 - 15 = 0$

$R = 15.0\ \text{k}$

Joint	A	B		C		D
Mem.	AB	BA	BC	CB	CD	DC
DF	1	0.4737	0.5263	0.5263	0.4737	1
FEM		−100			−100	
		47.37	52.63	52.63	47.37	
			26.32	26.32		
		−12.47	−13.85	−13.85	−12.47	
			−6.93	−6.93		
		3.28	3.64	3.64	3.28	
			1.82	1.82		
		−0.86	−0.96	−0.96	−0.86	
			−0.48	−0.48		
		0.23	0.25	0.25	0.23	
			0.13	0.13		
		−0.06	−0.07	−0.07	−0.06	
			−0.03	−0.03		
		0.02	0.02	0.02	0.02	
		−62.50	62.50	62.50	−62.50	

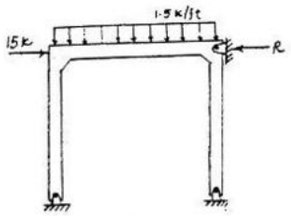

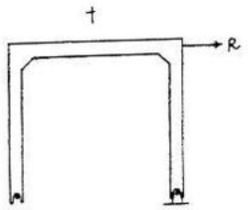

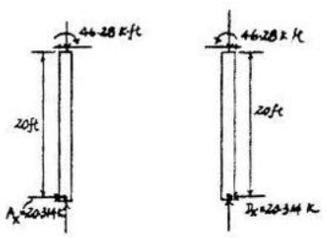

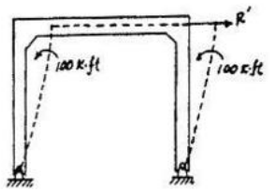

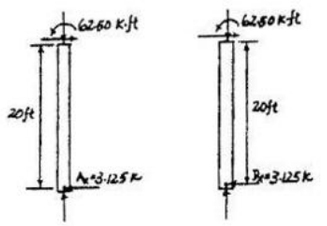

$R' = 3.125 + 3.125 = 6.25\ \text{k}$

$M_{BA} = 46.28 + (\dfrac{15}{6.25})(-62.5) = -104\ \text{k}\cdot\text{ft}$ **Ans**

$M_{BC} = -46.28 + (\dfrac{15}{6.25})(62.5) = 104\ \text{k}\cdot\text{ft}$ **Ans**

$M_{CB} = 46.28 + (\dfrac{15}{6.25})(62.5) = 196\ \text{k}\cdot\text{ft}$ **Ans**

$M_{CD} = -46.28 + (\dfrac{15}{6.25})(-62.5) = -196\ \text{k}\cdot\text{ft}$ **Ans**

$M_{AB} = M_{DC} = 0$ **Ans**

www.e-kitabi.com

c12.qxd 6/24/08 4:43 PM Page 346

© 2009 by R.C. Hibbeler. Published by Pearson Prentice Hall, Pearson Education, Inc., Upper Saddle River, NJ. All rights reserved. This material is protected under all copyright laws as they currently exist. No portion of this material may be reproduced, in any form or by any means, without permission in writing from the publisher.

12–17. Determine the moments acting at the ends of each member. Assume the supports at A and D are fixed. The moment of inertia of each member is indicated in the figure. $E = 29(10^3)$ ksi.

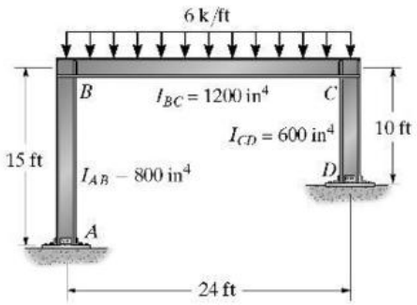

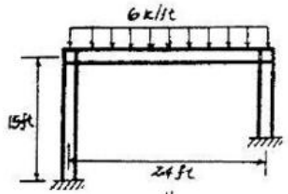

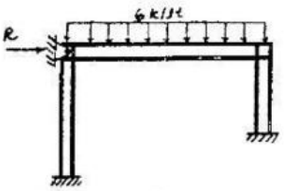

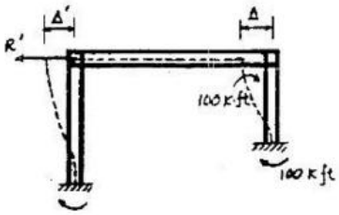

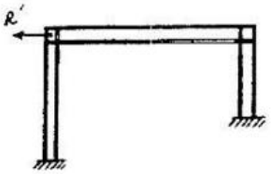

Consider no sideway

$(DF)_{AB} = (DF)_{DC} = 0$

$$(DF)_{BA} = \frac{(\frac{3}{12}I_{BC})/15}{(\frac{3}{12}I_{BC})/15 + I_{BC}/24} = 0.5161$$

$(DF)_{BC} = 0.4839$

$$(DF)_{CB} = \frac{I_{BC}/24}{0.5I_{BC}/10 + I_{BC}/24} = 0.4545$$

$(DF)_{CD} = 0.5455$

$(FEM)_{AB} = (FEM)_{BA} = 0$

$$(FEM)_{BC} = \frac{-6(24)^2}{12} = -288\ \text{k}\cdot\text{ft}$$

$(FEM)_{CB} = 288\ \text{k}\cdot\text{ft}$

$(FEM)_{CD} = (FEM)_{DC} = 0$

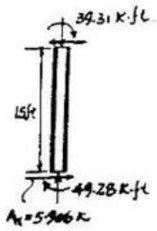

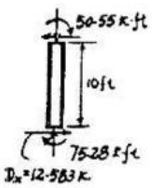

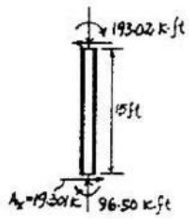

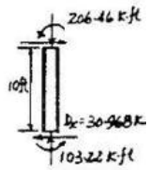

Joint	A		B		C	D
Mem.	AB	BA	BC	CB	CD	DC
DF	0	0.5161	0.4839	0.4545	0.5455	0
FEM			−288	288		
		148.64	139.36	−130.90	−157.10	
	74.32		−65.45	69.68		−78.55
		33.78	31.67	−31.67	38.01	
	16.89		−15.84	15.84		−19.01
		8.18	7.66	−7.20	−8.64	
	4.09		−3.60	3.83		−4.32
		1.86	1.74	−1.74	−2.09	
	0.93		−0.87	0.87		−1.04
		0.45	0.42	−0.40	−0.47	
	0.22		−0.20	0.21		−0.24
		0.10	0.10	−0.10	−0.11	
	0.05		−0.05	0.05		−0.06
		0.02	0.02	−0.02	−0.03	
ΣM	96.50	193.02	−193.02	206.46	−206.46	−103.22

$\stackrel{+}{\rightarrow}\Sigma F_x = 0$ (for the frame without sideway)

$R + 19.301 - 30.968 = 0$

$R = 11.666$ k

$$(FEM)_{CD} = (FEM)_{DC} = 100 = \frac{6E(0.75I_{AB})\Delta'}{10^2}$$

$$\Delta' = \frac{100(10^2)}{6E(0.75I_{AB})}$$

$$(FEM)_{AB} = (FEM)_{BA} = \frac{6EI_{AB}\Delta'}{15^2} = (\frac{6EI_{AB}}{15^2})(\frac{100(10)^2}{6E(0.75I_{AB})}) = 59.26\ \text{k}\cdot\text{ft}$$

Joint	A		B		C	D
Mem.	AB	BA	BC	CB	CD	DC
DF	0	0.5161	0.4839	0.4545	0.5455	0
FEM	59.26	59.26			100	100
		−30.58	−28.68	−45.45	−54.55	
	−15.29		−22.73	−14.34		−27.28
		11.73	11.00	6.52	7.82	
	5.87		3.26	5.50		3.91
		−1.68	−1.58	−2.50	−3.00	
	−0.84		−125	−0.79		−1.50
		0.65	0.60	0.36	0.43	
	0.32		0.18	0.30		0.22
		−0.09	−0.09	−0.14	−0.16	
	−0.05		−0.07	−0.04		−0.08
		0.04	0.03	0.02	0.02	
	0.02		0.01	0.02		0.01
ΣM	49.28	39.31	−39.31	−50.55	50.55	75.28

$R' = 5.906 + 12.585 = 18.489$ k

$$M_{AB} = 96.50 + (\frac{11.666}{18.489})(49.28) = 128\ \text{k}\cdot\text{ft}$$ Ans

$$M_{BA} = 193.02 - (\frac{11.666}{18.489})(39.31) = 218\ \text{k}\cdot\text{ft}$$ Ans

$$M_{BC} = -193.02 + (\frac{11.666}{18.489})(-39.31) = -218\ \text{k}\cdot\text{ft}$$ Ans

$$M_{CB} = 206.46 + (\frac{11.666}{18.489})(-50.55) = 175\ \text{k}\cdot\text{ft}$$ Ans

$$M_{CD} = -206.46 + (\frac{11.666}{18.489})(50.55) = -175\ \text{k}\cdot\text{ft}$$ Ans

$$M_{DC} = -103.21 + (\frac{11.666}{18.489})(75.28) = -55.7\ \text{k}\cdot\text{ft}$$ Ans

www.e-kitabi.com

© 2009 by R.C. Hibbeler. Published by Pearson Prentice Hall, Pearson Education, Inc., Upper Saddle River, NJ. All rights reserved. This material is protected under all copyright laws as they currently exist. No portion of this material may be reproduced, in any form or by any means, without permission in writing from the publisher.

12–18. Determine the moments at B and C and then draw the moment diagram. Assume A and D are pins and B and C are fixed-connected joints. EI is constant.

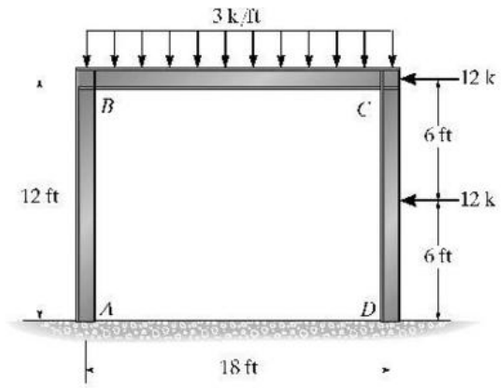

Consider no sidesway

$(DF)_{AB} = (DF)_{DC} = 1$

$(DF)_{BA} = (DF)_{CD} = \dfrac{3I/12}{3I/12 + 4I/18} = 0.5294$

$(DF)_{BC} = (DF)_{CB} = 0.4706$

$(FEM)_{AB} = (FEM)_{BA} = 0$

$(FEM)_{BC} = -\dfrac{3(18)^2}{12} = -81\ \text{k}\cdot\text{ft}$

$(FEM)_{CB} = 81\ \text{k}\cdot\text{ft}$

$(FEM)_{CD} = -\dfrac{12(12)}{8} = -18\ \text{k}\cdot\text{ft}$

$(FEM)_{DC} = 18\ \text{k}\cdot\text{ft}$

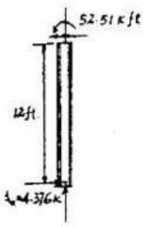

Joint	A	B		C		D
Mem.	AB	BA	BC	CB	CD	DC
DF	1	0.5294	0.4706	0.4706	0.5294	1
FEM			−81	81	−18	18
		42.88	38.12	−29.65	−33.35	−18
			−14.82	19.06	−9.0	
		7.85	6.97	−4.74	−5.33	
			−2.36	3.49		
		1.25	1.11	−1.64	−1.85	
			−0.82	0.56		
		0.43	0.39	−0.26	−0.29	
			−0.13	0.19		
		0.07	0.06	−0.09	−0.10	
			−0.05	0.03		
		0.02	0.02	−0.01	−0.02	
ΣM	0	52.51	−52.51	67.94	−67.94	0

$\pm \Sigma F_x = 0$ (for the frame without sidesway)

$R + 4.376 + 0.339 - 12 - 12 = 0$

$R = 19.286$

Joint	A	B		C		D
Mem.	AB	BA	BC	CB	CD	DC
DF	1	0.5294	0.4706	0.4706	0.5294	1
FEM		100			100	
		−52.94	−47.06	−47.06	−52.94	
			−23.53	−23.53		
		12.46	11.07	11.07	12.46	
			5.54	5.54		
		−2.93	−2.61	−2.61	−2.93	
			−1.30	−1.30		
		0.69	0.61	0.61	0.69	
			0.31	0.31		
		−0.16	−0.14	−0.14	−0.16	
			−0.07	−0.07		
		0.04	0.03	0.03	0.04	
ΣM	0	57.15	−57.15	−57.15	57.15	0

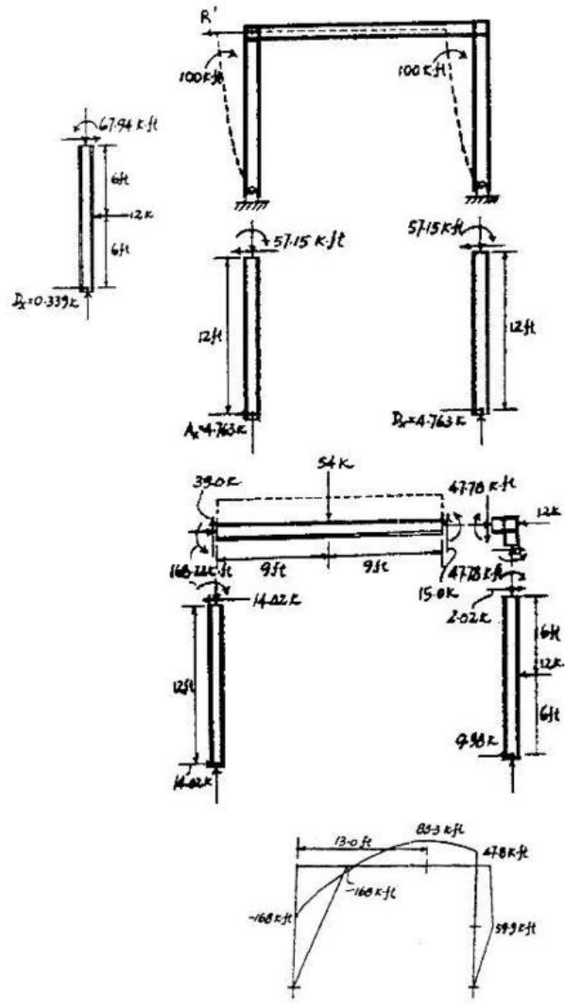

$R' = 4.763\ \text{k} + 4.763\ \text{k} = 9.525\ \text{k}$

$M_{BA} = 52.51 + \dfrac{19.286}{9.525}(57.15) = 168\ \text{k}\cdot\text{ft}$ **Ans**

$M_{BD} = -52.51 + \dfrac{19.286}{9.525}(-57.15) = -168\ \text{k}\cdot\text{ft}$ **Ans**

$M_{DB} = 67.94 + \dfrac{19.286}{9.525}(-57.15) = -47.8\ \text{k}\cdot\text{ft}$ **Ans**

$M_{DE} = -67.94 + \dfrac{19.286}{9.525}(57.15) = 47.8\ \text{k}\cdot\text{ft}$ **Ans**

$M_{AB} = M_{DC} = 0$ **Ans**

www.e-kitabi.com

© 2009 by R.C. Hibbeler. Published by Pearson Prentice Hall, Pearson Education, Inc., Upper Saddle River, NJ. All rights reserved. This material is protected under all copyright laws as they currently exist. No portion of this material may be reproduced, in any form or by any means, without permission in writing from the publisher.

12–19. Determine the moments acting at the ends of each member. Assume the joints are fixed connected and A and D are fixed supports. EI is constant.

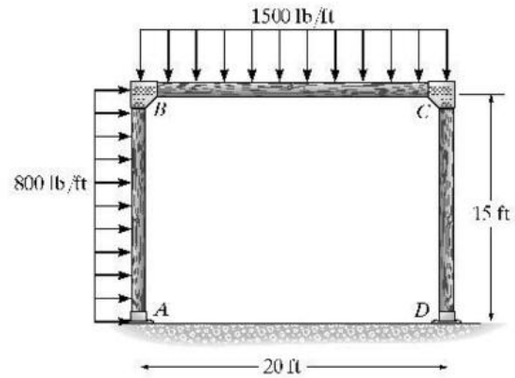

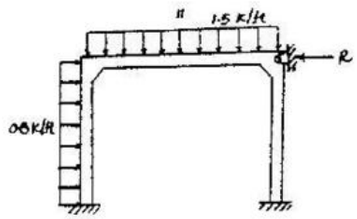

Consider no sideway

$(DF)_{AB} = (DF)_{DC} = 0$

$(DF)_{BA} = (DF)_{CD} = \frac{I/15}{I/15 + I/20} = 0.5714$

$(DF)_{BC} = (DF)_{CB} = 0.4286$

$(FEM)_{AB} = \frac{-0.8(15)^2}{12} = -15\ \text{k}\cdot\text{ft}$

$(FEM)_{BA} = 15\ \text{k}\cdot\text{ft}$

$(FEM)_{BC} = \frac{-1.5(20)^2}{12} = -50\ \text{k}\cdot\text{ft}$

$(FEM)_{CB} = 50\ \text{k}\cdot\text{ft}$

$(FEM)_{CD} = (FEM)_{DC} = 0$

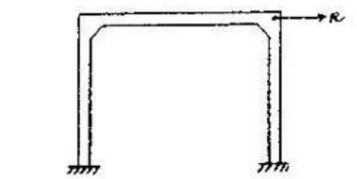

Joint	A	B		C		D
Mem	AB	BA	BC	CB	CD	DC
DF	0	0.5714	0.4286	0.4286	0.5714	0
FEM	−15	15	−50	50		
	10.00	20.00	15.00	−21.43	−28.57	−14.29
	3.06	6.12	4.59	−3.21	−4.29	−2.14
	0.46	0.92	0.69	−0.98	−1.32	0.66
	0.14	0.28	0.21	−0.15	−0.20	−0.10
	0.02	0.04	0.03	−0.05	−0.06	−0.03
			−1.61	2.30		
			−0.07	0.11		
			−0.02	0.02		
ΣM	−1.32	42.38	−42.38	34.43	−34.43	−17.21

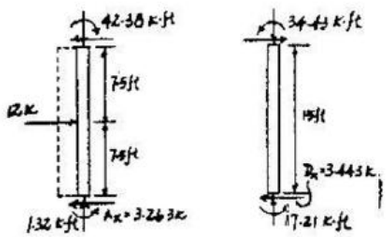

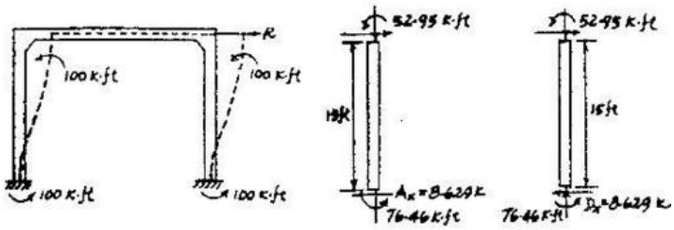

$\overset{+}{\rightarrow} \Sigma F_x = 0$ (for the frame without sidesway)

$R + 3.263 + 3.443 - 0.8(15) = 0$

$R = 5.294\ \text{k}$

Joint	A	B		C		D
Mem.	AB	BA	BC	CB	CD	DC
DF	0	0.5714	0.4286	0.4286	0.5714	0
FEM	−100	−100			−100	−100
	28.57	57.14	42.86	42.86	57.14	28.57
	−6.12	−12.25	−9.18	−9.18	−12.25	−6.12
	1.31	2.62	1.97	1.97	2.62	1.31
	−0.28	−0.56	−0.42	−0.42	−0.56	−0.28
	0.06	0.12	0.09	0.09	0.12	0.06
			−4.59	−4.59		
			−0.21	−0.21		
			0.05	0.05		
		−0.03	−0.02	−0.02	−0.03	
ΣM	−76.46	−52.95	52.95	52.95	−52.95	−76.46

$R' = 8.627 + 8.627 = 17.255\ \text{k}$

$M_{AB} = -1.32 + (\frac{5.294}{17.255})(-76.46) = -24.8\ \text{k}\cdot\text{ft}$ **Ans**

$M_{BA} = 42.38 + (\frac{5.294}{17.255})(-52.95) = 26.1\ \text{k}\cdot\text{ft}$ **Ans**

$M_{BC} = -42.38 + (\frac{5.294}{17.255})(52.95) = -26.1\ \text{k}\cdot\text{ft}$ **Ans**

$M_{CB} = 34.43 + (\frac{5.294}{17.255})(52.95) = 50.7\ \text{k}\cdot\text{ft}$ **Ans**

$M_{CD} = -34.43 + (\frac{5.294}{17.255})(-52.95) = -50.7\ \text{k}\cdot\text{ft}$ **Ans**

$M_{DC} = -17.22 + (\frac{5.294}{17.255})(-76.46) = -40.7\ \text{k}\cdot\text{ft}$ **Ans**

www.e-kitabi.com

c12.qxd 6/24/08 4:43 PM Page 349

© 2009 by R.C. Hibbeler. Published by Pearson Prentice Hall, Pearson Education, Inc., Upper Saddle River, NJ. All rights reserved. This material is protected under all copyright laws as they currently exist. No portion of this material may be reproduced, in any form or by any means, without permission in writing from the publisher.

***12–20.** Determine the moments acting at the fixed supports A and D of the battered-column frame. EI is constant.

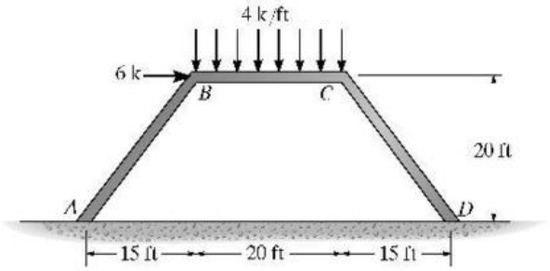

Consider no sidesway

$(DF)_{AB} = (DF)_{DC} = 0$

$(DF)_{BA} = (DF)_{CD} = \dfrac{I/25}{I/25 + I/20} = 0.4444$

$(DF)_{BC} = (DF)_{CB} = 0.5556$

$(FEM)_{BC} = \dfrac{-4(20)^2}{12} = -133.33\ \text{k}\cdot\text{ft}$

$(FEM)_{CB} = 133.33\ \text{k}\cdot\text{ft}$

$(FEM)_{AB} = (FEM)_{BA} = (FEM)_{CD} = (FEM)_{DC} = 0$

Joint	A		B		C	
Mem.	AB	BA	BC	CB	CD	DC
DF	0	0.4444	0.5556	0.5556	0.4444	0
FEM			−133.33	133.33		
		59.25	74.08	−74.08	−59.25	
	29.63		−37.04	37.04		−29.63
		16.46	20.58	−20.58	−16.46	
	8.23		−10.29	10.29		−8.23
		4.57	5.72	−5.72	−4.57	
	2.28		−2.86	2.86		−2.29
		1.27	1.59	−1.59	−1.27	
	0.64		−0.79	0.79		−0.64
		0.35	0.44	−0.44	−0.35	
	0.18		−0.22	0.22		−0.18
		0.10	0.12	−0.12	−0.10	
	0.05		−0.06	0.06		−0.05
		0.03	0.03	−0.03	−0.03	
ΣM	41.00	82.03	−82.03	82.03	−82.03	−41.00

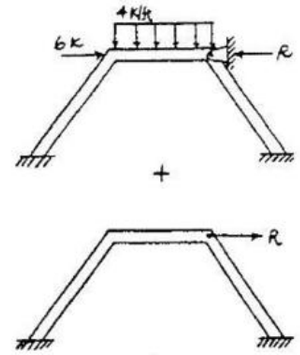

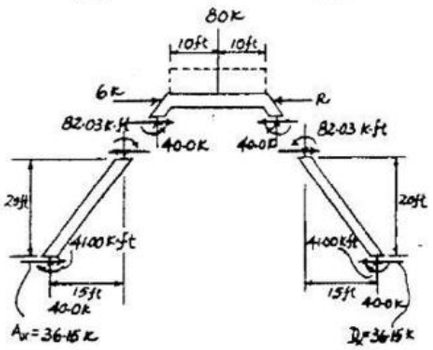

$R + 34.15\ \text{k} - 34.15\ \text{k} - 6 = 0$

$R = 6\ \text{k}$

$(FEM)_{AB} = (FEM)_{BA} = \dfrac{-6EI\Delta'}{(25)^2} = -100\ \text{k}\cdot\text{ft}$

$\Delta' = \dfrac{(100)(25)^2}{6EI}$

$(FEM)_{BC} = (FEM)_{CB} = \dfrac{(6EI)2\Delta'\cos\theta}{(20)^2} = \dfrac{(6EI)(2)(0.6)}{(20)^2}\left(\dfrac{(100)(25)^2}{6EI}\right) = 187.5\ \text{k}\cdot\text{ft}$

$(FEM)_{CD} = (FEM)_{DC} = -100\ \text{k}\cdot\text{ft}$

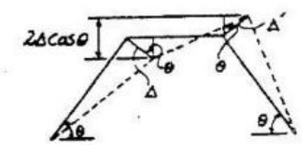

Joint	A		B		C	
Mem.	AB	BA	BC	CB	CD	DC
DF	0	0.4444	0.5556	0.5556	0.4444	0
FEM	−100	−100	187.5	187.5	−100	−100
		−38.88	−48.62	−48.62	38.88	
	−19.44		−24.31	−24.31		−19.44
		10.80	13.51	13.51	10.80	
	5.40		6.75	6.75		5.40
		−3.00	−3.75	−3.75	−3.00	
	−1.50		−1.88	−1.88		−1.50
		0.84	1.04	1.04	0.84	
	0.42		0.52	0.52		0.42
		−0.23	−0.29	−0.29	−0.23	
	−0.12		−0.14	−0.14		−0.12
		0.06	0.08	0.08	0.06	
	0.03		0.04	0.04		0.03
		−0.02	−0.02	−0.02	−0.02	
ΣM	−115.21	−130.44	130.44	130.44	−130.44	−115.21

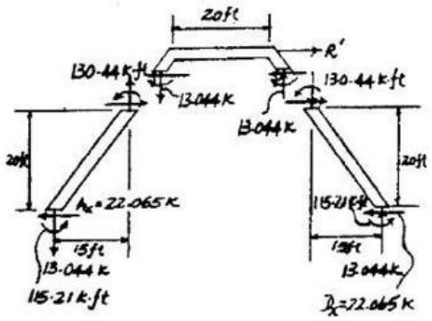

$R' = 22.065\ \text{k} + 22.065\ \text{k} = 44.130\ \text{k}$

$M_{AB} = 41.00 + \left(\dfrac{6}{44.130}\right)(-115.21) = 25.3\ \text{k}\cdot\text{ft}$ **Ans**

$M_{DC} = -41.00 + \left(\dfrac{6}{44.130}\right)(-115.21) = -56.7\ \text{k}\cdot\text{ft}$ **Ans**

www.e-kitabi.com

c12.qxd 6/24/08 4:43 PM Page 350

© 2009 by R.C. Hibbeler. Published by Pearson Prentice Hall, Pearson Education, Inc., Upper Saddle River, NJ. All rights reserved. This material is protected under all copyright laws as they currently exist. No portion of this material may be reproduced, in any form or by any means, without permission in writing from the publisher.

12–21. Determine the horizontal and vertical components of reaction at the pin supports A and D. EI is constant.

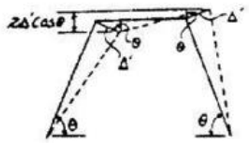

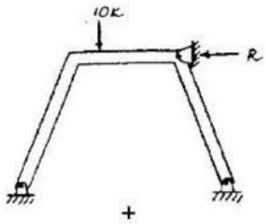

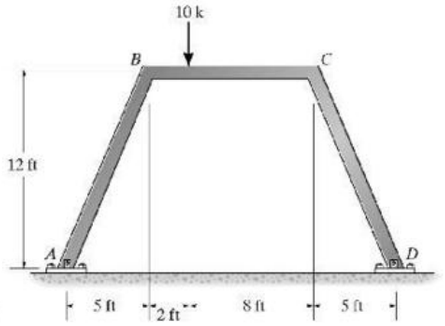

Consider no sideway

$(DF)_{AB} = (DF)_{DC} = 1$

$(DF)_{BA} = (DF)_{CD} = \dfrac{3I/13}{3I/13 + 4I/10} = 0.3659$

$(DF)_{BC} = (DF)_{CB} = 0.6341$

$(FEM)_{BC} = -\dfrac{10(8)^2(2)}{10^2} = -12.8\ \text{k}\cdot\text{ft}$

$(FEM)_{CB} = \dfrac{10(2)^2(8)}{10^2} = 3.20\ \text{k}\cdot\text{ft}$

$(FEM)_{AB} = (FEM)_{BA} = (FEM)_{CD} = (FEM)_{DC} = 0$

Joint	A	B		C		D
Mem.	AB	BA	BC	CB	CD	DC
DF	1	0.3659	0.6341	0.6341	0.3659	1
FEM			−12.8	3.2		
		4.684	8.116	−2.029	−1.171	
			−1.015	4.058		
		0.371	0.643	−2.573	−1.485	
			−1.287	0.322		
		0.471	0.816	−0.204	−0.118	
			−0.102	0.408		
		0.037	0.065	−0.259	−0.149	
			−0.130	0.032		
		0.047	0.082	−0.021	−0.012	
			−0.011	0.041		
		0.004	0.007	−0.026	−0.015	
ΣM	0	5.614	−5.614	2.95	−2.95	0

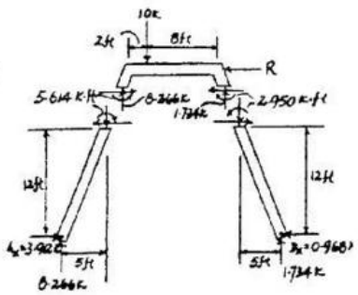

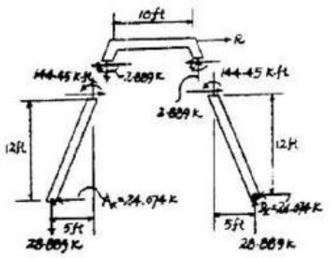

$\overset{+}{\leftarrow} \Sigma F_x = 0$ (for frame without sidesway)

$R + 0.968 - 3.912 = 0$

$R = 2.944\ \text{k}$

$(FEM)_{BA} = (FEM)_{CD} = \dfrac{-3EI\Delta'}{13^2} = -100\ \text{k}\cdot\text{ft}$

$\Delta' = \dfrac{100(13)^2}{3EI}$

$(FEM)_{BC} = (FEM)_{CB} = \dfrac{6EI(2\Delta'\cos\theta)}{10^2} = \dfrac{(6EI)(2)(\frac{5}{13})}{10^2}\left(\dfrac{100(13)^2}{3EI}\right) = 260\ \text{k}\cdot\text{ft}$

Joint	A	B		C		D
Mem.	AB	BA	BC	CB	CD	DC
DF	1	0.3659	0.6341	0.6341	0.3659	1
FEM		−100	260	260	−100	
		−58.54	−101.46	−101.46	−58.54	
			−50.73	−50.73		
		18.56	32.17	32.17	18.56	
			16.08	16.08		
		−5.88	−10.20	−10.20	−5.88	
			−5.10	−5.10		
		1.87	3.23	3.23	1.87	
			1.62	1.62		
		−0.59	−1.03	−1.03	−0.59	
			−0.51	−0.51		
		0.19	0.33	0.33	0.19	
			0.16	0.16		
		−0.06	−0.10	−0.10	−0.06	
			−0.05	−0.05		
		0.02	0.03	0.03	0.02	
ΣM	0	−144.45	144.45	144.45	−144.45	0

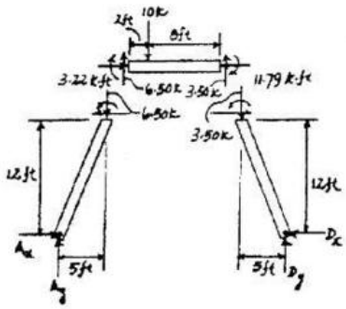

$R' = 24.074\ \text{k} + 24.074\ \text{k}$

$R' = 48.149\ \text{k}$

$M_{BA} = 5.614 + \left(\dfrac{2.944}{48.149}\right)(-144.45) = -3.22\ \text{k}\cdot\text{ft}$

$M_{BC} = -5.614 + \left(\dfrac{2.944}{48.149}\right)(144.45) = 3.22\ \text{k}\cdot\text{ft}$

$M_{CB} = 2.95 + \left(\dfrac{2.944}{48.149}\right)(144.45) = 11.79\ \text{k}\cdot\text{ft}$

$M_{CD} = -2.95 + \left(\dfrac{2.944}{48.149}\right)(-144.45) = -11.79\ \text{k}\cdot\text{ft}$

Thus,

$A_x = 2.44\ \text{k}$ **Ans**

$A_y = 6.50\ \text{k}$ **Ans**

$D_x = 2.44\ \text{k}$ **Ans**

$D_y = 3.50\ \text{k}$ **Ans**

www.e-kitabi.com

c13.qxd 6/24/08 4:46 PM Page 351

© 2009 by R.C. Hibbeler. Published by Pearson Prentice Hall, Pearson Education, Inc., Upper Saddle River, NJ. All rights reserved. This material is protected under all copyright laws as they currently exist. No portion of this material may be reproduced, in any form or by any means, without permission in writing from the publisher.

13–1. Determine the fixed-end moments at A and C for the composite beam. $E = 29(10^3)$ ksi.

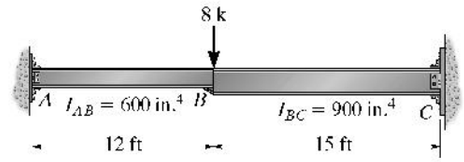

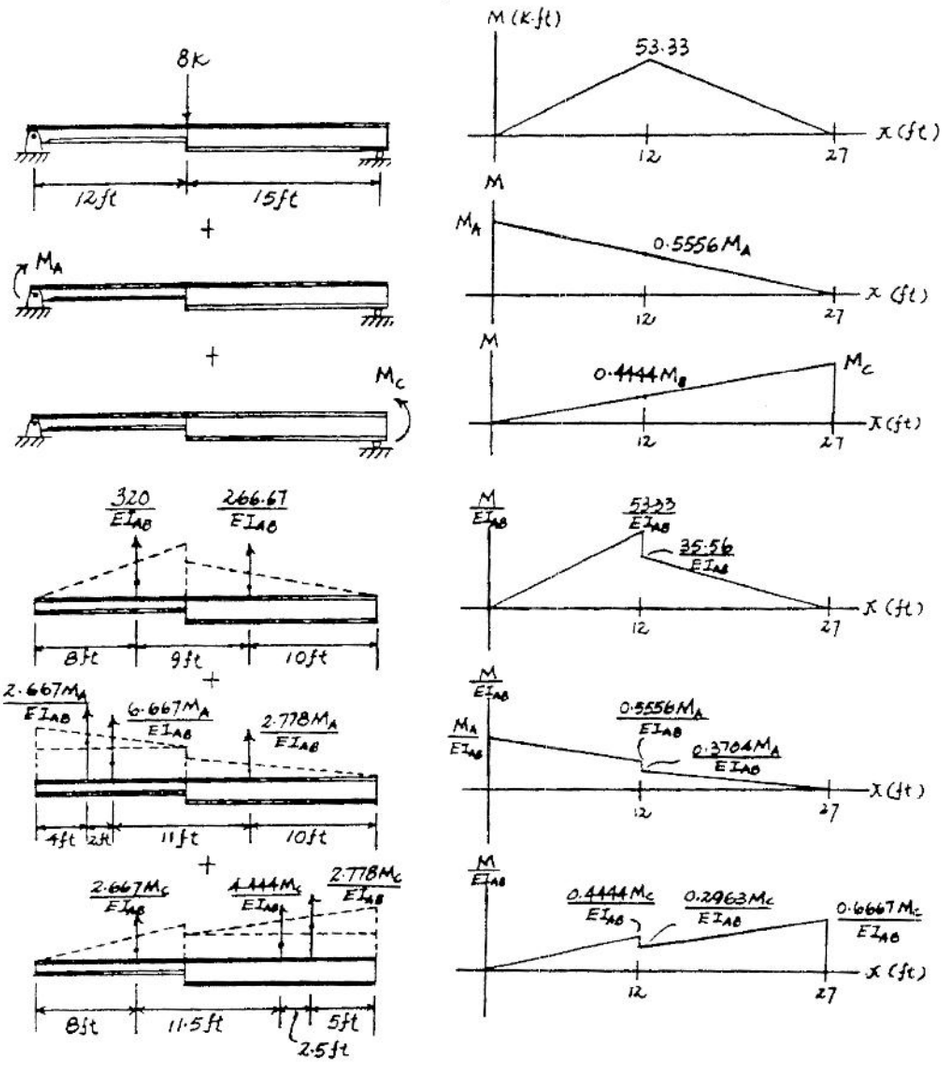

$+\uparrow \Sigma F_y = 0$: $586.667 + 12.111M_A + 9.8889M_C = 0$

$\zeta + \Sigma M_A = 0$: $7093.333 + 97.8889M_A + 169.111M_C = 0$

$M_C = -26.4$ k·ft **Ans**

$M_A = -26.9$ k·ft **Ans**

Negative signs indicate that the direction of the moments are opposite to those shown on the free-body diagrams.

www.e-kitabi.com

© 2009 by R.C. Hibbeler. Published by Pearson Prentice Hall, Pearson Education, Inc., Upper Saddle River, NJ. All rights reserved. This material is protected under all copyright laws as they currently exist. No portion of this material may be reproduced, in any form or by any means, without permission in writing from the publisher.

13–2. Determine the stiffness K_A and carry-over factor C_{AC} for the beam. Assume A and C are fixed supports.

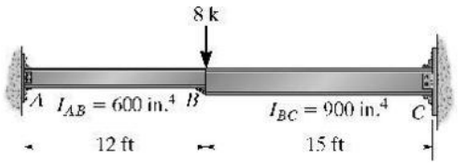

$$+\uparrow \Sigma F = 0: \quad 12.111M_A - 9.889C_{AC}M_A = 10EI_{AB}$$

$$(+\Sigma M_A = 0: \quad 97.889M_A - 169.111C_{AC}M_A = 0$$

$$K_A = M_A = 0.1566\,EI_{AB}$$

$$= 0.1566(29)(10^3)\frac{600}{144}$$

$$= 18.9(10^3)\ \text{k}\cdot\text{ft} \quad \textbf{Ans}$$

$$\text{COF} = C_{AC} = 0.579 \quad \textbf{Ans}$$

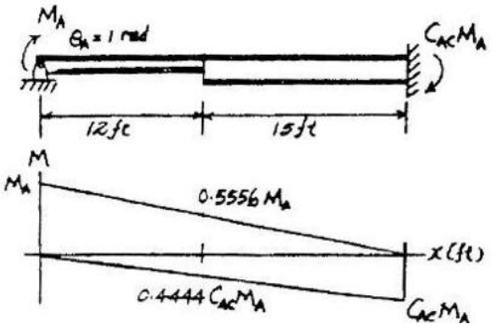

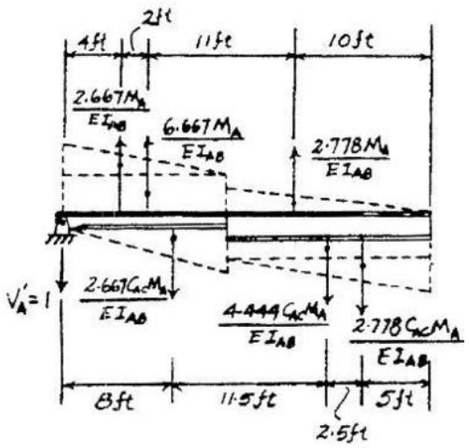

13–3. Determine the slope at the end B of the cantilever beam. The cross section is rectangular and has a constant width of 1 ft. Segment the beam every 5 ft for the calculation. Take $E = 29(10^3)$ ksi.

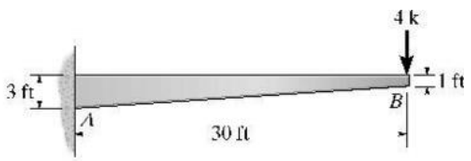

$$+\uparrow \Sigma F_y = 0: \quad -V_B - \left(\frac{1}{2}\right)\left(\frac{53.33}{E}\right)(5) - \left(\frac{63.27}{E}\right)(5) - \left(\frac{75.57}{E}\right)(5) - \left(\frac{90.00}{E}\right)(5) - \left(\frac{103.68}{E}\right)(5)$$

$$-\left(\frac{101.25}{E}\right)(5) = 0$$

$$\theta_B = -\frac{2302.2}{E} = -\frac{2302.2}{29(10)^3(144)} = -0.000551\ \text{rad} \quad \textbf{Ans}$$

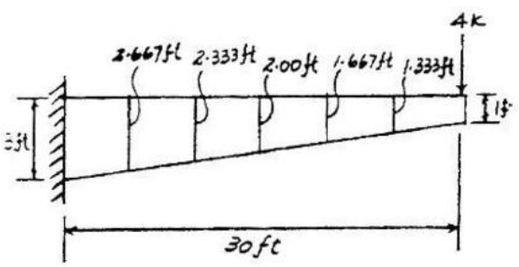

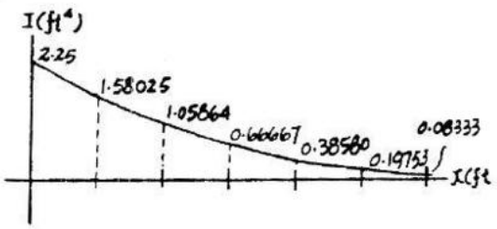

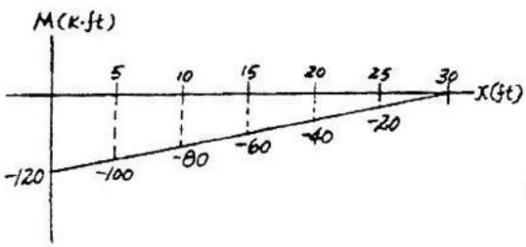

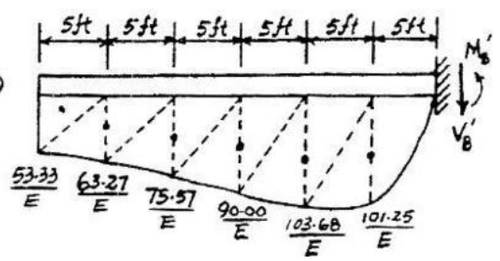

www.e-kitabi.com

c13.qxd 6/24/08 4:46 PM Page 353

© 2009 by R.C. Hibbeler. Published by Pearson Prentice Hall, Pearson Education, Inc., Upper Saddle River, NJ. All rights reserved. This material is protected under all copyright laws as they currently exist. No portion of this material may be reproduced, in any form or by any means, without permission in writing from the publisher.

***13–4.** Determine approximately the stiffness and carry-over factors for the end B of the beam. Segment the beam every 5 ft for the calculation.

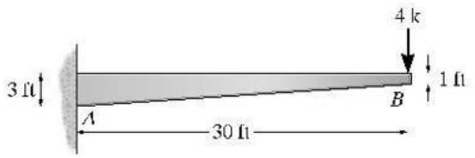

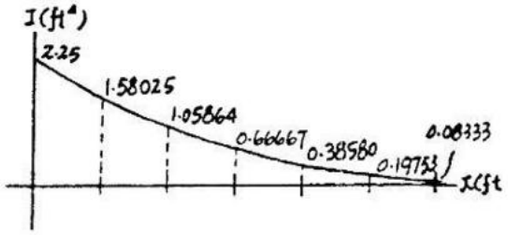

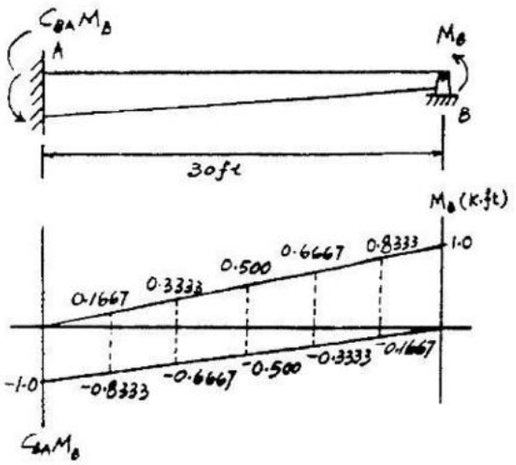

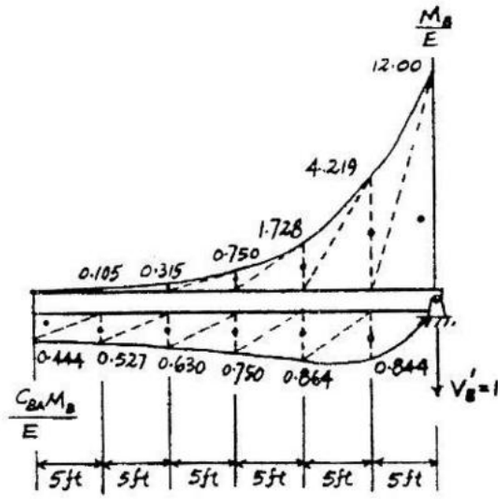

	area	$\frac{M_B}{E}$ moment about B' +	area	$\frac{C_{BA}M_B}{E}$ moment about B' +
	30.00	−50.00	4.22	21.10
	21.10	−105.48	4.32	43.20
	8.64	−86.40	3.75	56.25
	3.75	−56.25	3.15	63.00
	1.58	−31.50	2.64	65.88
	0.52	−13.12	1.11	31.45
Σ	65.59	−342.75	19.19	280.88

$$\zeta + \Sigma M_B = 0: \quad (-342.75)\left(\frac{M_B}{E}\right) + (280.88C_{BA})\left(\frac{M_B}{E}\right) = 0$$

$$C_{BA} = 1.22 \qquad \textbf{Ans}$$

$$+\uparrow \Sigma F_y = 0: \quad 65.59\left(\frac{M_B}{E}\right) - (19.19C_{BA})\left(\frac{M_B}{E}\right) - 1 = 0$$

$$M_B = K_B = \frac{29(10)^3(144)}{42.17} = 99\,021\ \text{k}\cdot\text{ft} = 99.0(10^3)\ \text{k}\cdot\text{ft} \qquad \textbf{Ans}$$

www.e-kitabi.com

c13.qxd 6/24/08 4:46 PM Page 354

© 2009 by R.C. Hibbeler. Published by Pearson Prentice Hall, Pearson Education, Inc., Upper Saddle River, NJ. All rights reserved. This material is protected under all copyright laws as they currently exist. No portion of this material may be reproduced, in any form or by any means, without permission in writing from the publisher.

13–5. Determine the stiffness and carry-over factors at ends A and B of the composite beam. $E = 29(10^3)$ ksi.

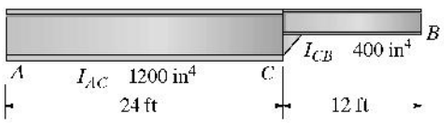

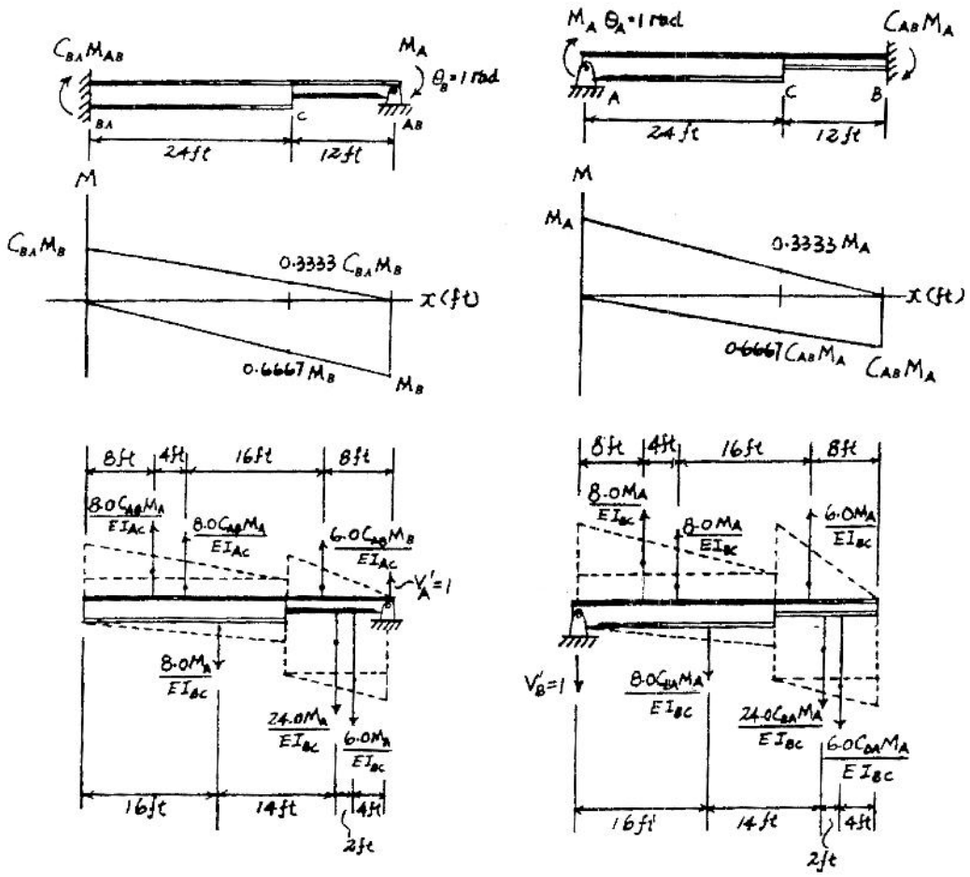

End A :

$+\uparrow \Sigma F_y = 0$: $\quad 22.0C_{BA}M_B - 38.0M_B = -EI_{BC}$

$\circlearrowleft +\Sigma M_A = 0$: $\quad -464C_{BA}M_B + 328M_B = 0$

$C_{BA} = 0.7069 = 0.707$ **Ans**

$K_B = M_B = 0.04455\,EI_{BC} = 10{,}765\ \text{k}\cdot\text{ft} = 10.8(10^3)\ \text{k}\cdot\text{ft}$ **Ans**

End B :

$+\uparrow \Sigma F_y = 0$: $\quad 22.0M_A - 38.0C_{AB}M_A = EI_{BC}$

$\circlearrowleft +\Sigma M_B = 0$: $\quad 328M_A - 1040C_{AB}M_A = 0$

$C_{AB} = 0.3154 = 0.315$ **Ans**

$K_A = M_A = 24\,129\ \text{k}\cdot\text{ft} = 24.1(10^3)\ \text{k}\cdot\text{ft}$ **Ans**

Check : $\quad C_{BA}K_B = (0.7069)\ (0\,765) = 7610$

$C_{AB}K_A = (0.3154)(24\,129) = 7610$

www.e-kitabi.com

c13.qxd 6/24/08 4:46 PM Page 355

© 2009 by R.C. Hibbeler. Published by Pearson Prentice Hall, Pearson Education, Inc., Upper Saddle River, NJ. All rights reserved. This material is protected under all copyright laws as they currently exist. No portion of this material may be reproduced, in any form or by any means, without permission in writing from the publisher.

13–6. Determine the stiffness and carry-over factors for the steel beam having a moment of inertia of 600 in^4 and a depth of 10 in. The beam is partially reinforced by 1 in. × 10 in. flange cover plates at each end. Take $E = 29(10^3)$ ksi.

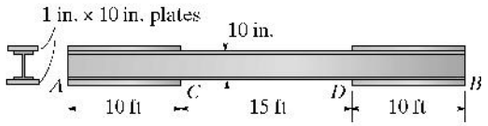

$$I = \frac{1}{12}(10)(12)^3 - \frac{1}{12}(10)(10)^3 = 606.67 \text{ in.}^4$$

Segment Area	$\frac{M_A}{E}$ Moment about A' ↻+	Segment Area	$\frac{C_{AB}M_A}{E}$ Moment about A' ↻+
24.54895	81.8312	24.54895	−163.6597
122.7466	613.733	148.112	−2591.961
148.112	2591.961	111.0868	−2221.736
111.0868	1666.302	122.7466	−3682.398
24.54895	695.554	24.54895	−777.385
Σ 431.0433	5649.381	431.0433	−9437.140

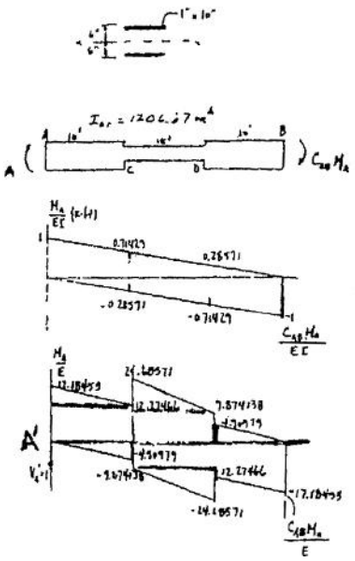

$$\text{(+}\Sigma M_{A'} = 0; \quad 5649.381\left(\frac{M_A}{E}\right) - 9437.140\left(\frac{C_{AB}M_A}{E}\right) = 0$$

$$C_{AB} = 0.599 = C_{BA} \text{ (Symmetry)} \quad \text{Ans}$$

$$+\uparrow \Sigma F_y = 0; \quad 431.0433\left(\frac{M_A}{E}\right) - 431.0433\left(\frac{C_{AB}M_A}{E}\right) - 1 = 0$$

$$K_A = M_A = \frac{29(10^3)(144)}{172.972} = 24138 \text{ k-ft}$$

$$= 24.1(10^3) \text{ k-ft} = K_B \text{ (Symmetry)} \quad \text{Ans}$$

13–7. Determine approximately the stiffness and carry-over factors for the steel beam having a moment of inertia of $94.9(10^6)$ mm^4 and a depth of 222 mm. The beam is partially reinforced by 15 mm × 200 mm flange cover plates at each end. Take $E = 200$ GPa.

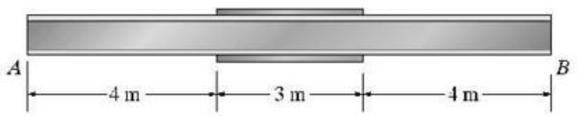

$$I = 2\left[\frac{1}{12}(0.2)(0.015)^3 + (0.2)(0.015)(0.1185)^2\right] + 94.9(10^{-6})$$

$$= 179.266(10^{-6}) \text{ m}^4$$

Segment Area	$\frac{M_A}{E}$ Moment about A' ↻+	Segment Area	$\frac{C_{AB}M_A}{E}$ Moment about A' ↻+
7,663.554	10,218.072	7,663.554	20,436.14
26,822.49	53,644.98	6,085.36	33,469.49
2,282.06	11,410.31	2,282.06	13,692.38
6.085.36	33,469.491	26,822.49	241,402.43
7,663.554	63,863.08	7,663.554	74,081.02
Σ 50,517.03	172,605.93	50,517.03	383,081.51

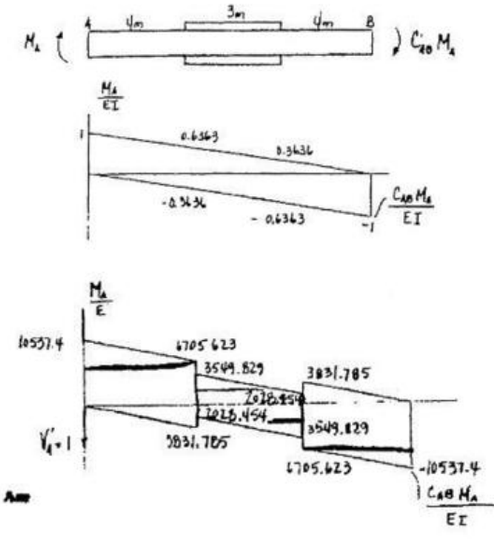

$$\text{(+}\Sigma M_{A'} = 0; \quad 172,605.93\left(\frac{M_A}{E}\right) - 383,081.51\left(\frac{C_{AB}M_A}{E}\right) = 0$$

$$C_{AB} = 0.451 = C_{BA} \text{ (symmetry)} \quad \text{Ans}$$

$$+\uparrow \Sigma F_y = 0; \quad 50,517.03\left(\frac{M_A}{E}\right) - 50,517.03\left(\frac{C_{AB}M_A}{E}\right) - 1 = 0$$

$$K_A = M_A = \frac{200(10^9)}{27,755.45} = 7.21 \text{ MN·m} = K_B \text{ (symmetry)} \quad \text{Ans}$$

www.e-kitabi.com

c13.qxd 6/24/08 4:46 PM Page 356

© 2009 by R.C. Hibbeler. Published by Pearson Prentice Hall, Pearson Education, Inc., Upper Saddle River, NJ. All rights reserved. This material is protected under all copyright laws as they currently exist. No portion of this material may be reproduced, in any form or by any means, without permission in writing from the publisher.

***13–8.** The tapered girder is made of steel having a $\frac{1}{2}$-in. web plate and welded to flange plates which are 8 in. × 1 in. Determine the approximately carry-over factor and stiffness at the ends A and B. Segment the girder every 4 ft for the calculations. Take $E = 29(10^3)$ ksi.

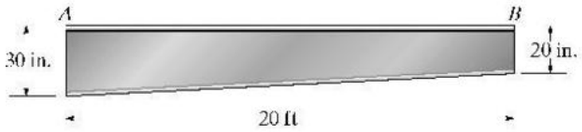

At right end:

$$I = 2\left[\frac{1}{12}(8)(1)^3 + 8(1)(10.5)^2\right] + \frac{1}{12}\left(\frac{1}{2}\right)(20)^3 = 2098.67\ \text{in.}^4$$

Using (approximately) the triangular areas of Fig. (1):

$$\left(+\Sigma M_B = 0;\right) \quad \frac{C_{BA}K_B}{E}(4)\left[\frac{1}{2}(4.17195)\left(16+\frac{8}{3}\right)+(3.87589)(16)+(3.40897)(12)+(2.69532)(8)+(1.61937)(4)\right] - \frac{K_B}{E}(4)\left[(0.96897)(16)+(2.27265)(12)+(4.04298)(8)+(6.47747)(4)+\frac{1}{2}(9.88056)\left(\frac{4}{3}\right)\right] = 0$$

$$679.600437C_{BA} - 430.464285 = 0$$

$$C_{BA} = 0.6334 = 0.633 \quad \textbf{Ans}$$

$$+\downarrow \Sigma F_y = 0; \quad -\frac{C_{BA}K_B}{E}(4)\left[\frac{1}{2}(4.17195)+3.87589+3.40897+2.69532+1.61936\right] - \frac{K_B}{E}(4)\left[0.96897+2.27265+4.04298+6.47747+\frac{1}{2}(9.88056)\right] = -1$$

$$34.67407K_B - 74.80939K_B = -29(10^2)(144)$$

$$K_B = 104{,}048\ \text{k}\cdot\text{ft} = 104(10^3)\ \text{k}\cdot\text{ft} \quad \textbf{Ans}$$

$$\left(+\Sigma M_A = 0;\right) \quad \frac{K_A}{E}(4)\left[\frac{1}{2}(4.17195)\left(\frac{4}{3}\right)+(3.87589)(4)+(3.40897)(8)+(2.69532)(12)+(1.61937)(16)\right] - \frac{C_{AB}K_A}{E}(4)\left[(0.96897)(4)+2.27265(8)+4.04298(12)+(6.47747)(16)+\frac{1}{2}(9.88056)\left(16+\frac{8}{3}\right)\right] = 0$$

$$415.2413 - 1065.72359C_{AB} = 0$$

$$C_{AB} = 0.3896 = 0.390 \quad \textbf{Ans}$$

$$+\uparrow \Sigma F_y = 0; \quad \frac{K_A}{E}(4)\left[\frac{1}{2}(4.17194)+3.87589+3.40897+2.69532+1.61937\right] - \frac{C_{AB}K_A}{E}(4)\left[0.96897+2.27265+4.04298+6.47747+\frac{1}{2}(9.88056)\right] = 1$$

$$54.742088K_A - 29.1482255K_A = 29(10^2)(144)$$

$$K_A = 163164\ \text{k}\cdot\text{ft} = 163(10^3)\ \text{k}\cdot\text{ft} \quad \textbf{Ans}$$

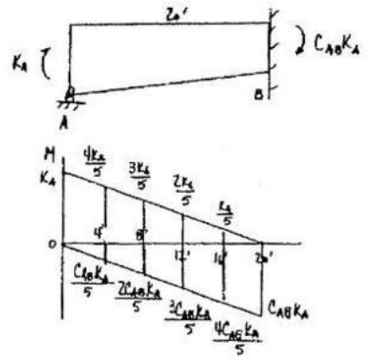

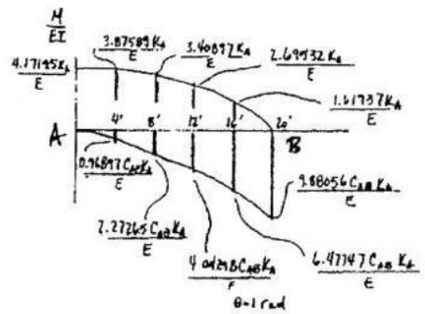

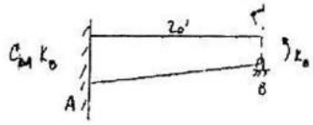

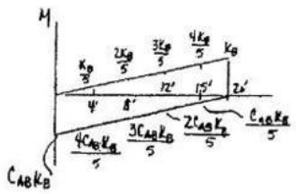

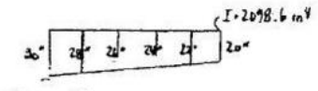

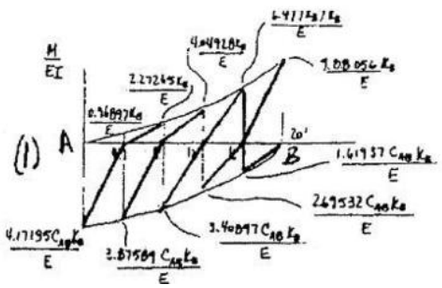

www.e-kitabi.com

c13.qxd 6/24/08 4:46 PM Page 357

© 2009 by R.C. Hibbeler. Published by Pearson Prentice Hall, Pearson Education, Inc., Upper Saddle River, NJ. All rights reserved. This material is protected under all copyright laws as they currently exist. No portion of this material may be reproduced, in any form or by any means, without permission in writing from the publisher.

13–9. The column AB serves to support a beam rail C for a light industrial building. Determine the stiffness and carry-over factors at ends A and B. $E = 29(10^3)$ ksi.

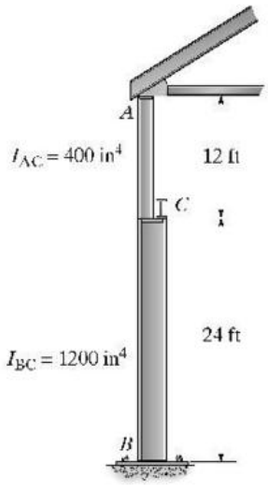

Using Fig. (1):

$+\uparrow \Sigma F_y = 0;\quad 22C_{AB}M_A - 38M_A = -EI_{BC}$

$(+\Sigma M_A = 0;\quad 464C_{AB}M_A - 328M_A = 0$

$C_{AB} = 0.7069 = 0.707$ **Ans**

$K_A = M_A = 10{,}765.489\ \text{k}\cdot\text{ft} = 10.8(10^3)\ \text{k}\cdot\text{ft}$ **Ans**

Using Fig. (2):

$+\uparrow \Sigma F_y = 0;\quad 22M_B - 38C_{BA}M_B = EI_{BC}$

$(+\Sigma M_B = 0;\quad 328M_B - 1040C_{BA}M_B = 0$

$C_{BA} = 0.3154 = 0.315$ **Ans**

$K_B = M_B = 24{,}129.544\ \text{k}\cdot\text{ft} = 24.1(10^3)\ \text{k}\cdot\text{ft}$ **Ans**

Check: $C_{AB}K_A = (0.7069)(10{,}765.489) = 7610$

$C_{BA}K_B = (0.3154)(24{,}129.544) = 7610$

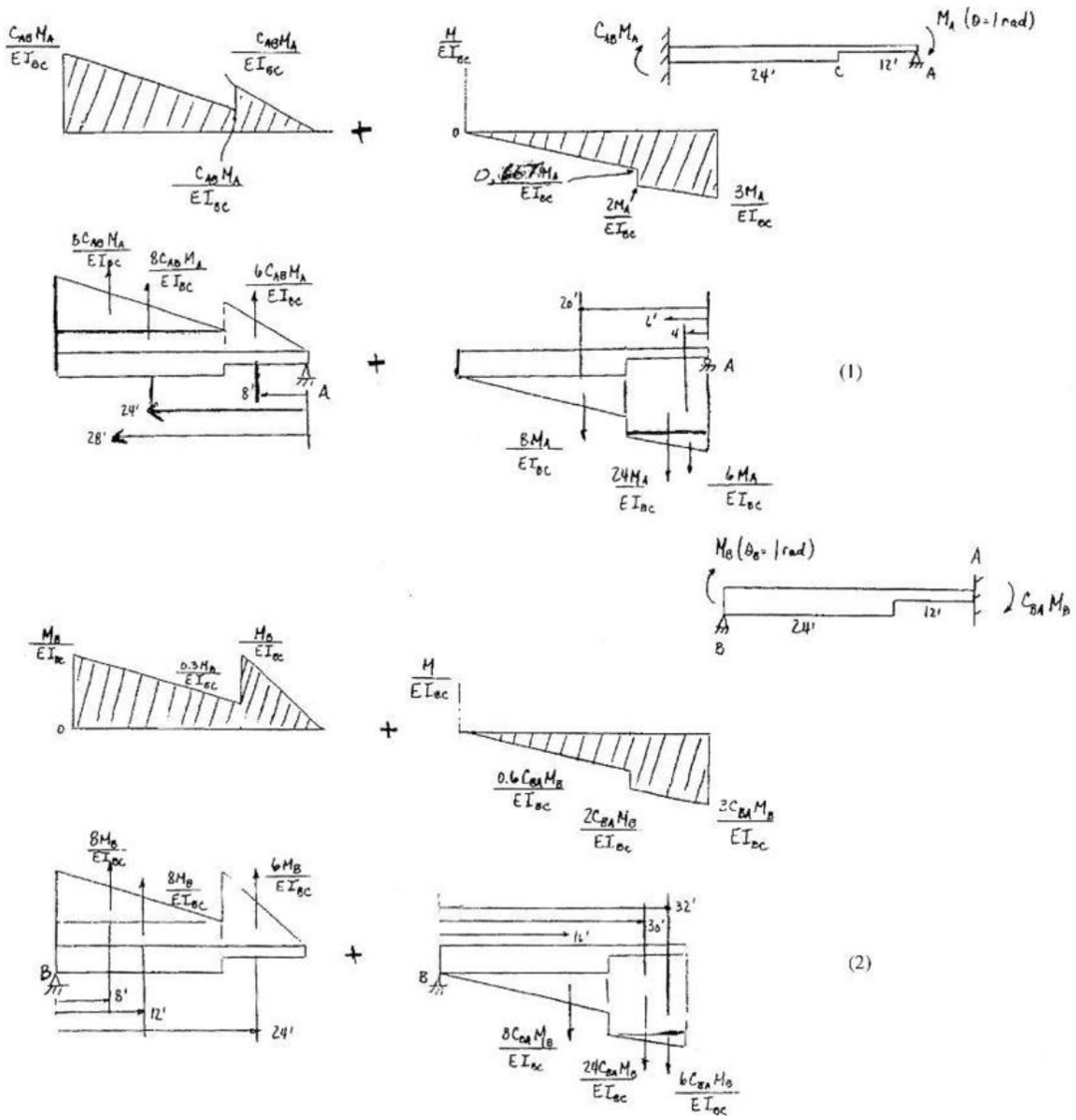

www.e-kitabi.com

c13.qxd 6/24/08 4:46 PM Page 358

© 2009 by R.C. Hibbeler. Published by Pearson Prentice Hall, Pearson Education, Inc., Upper Saddle River, NJ. All rights reserved. This material is protected under all copyright laws as they currently exist. No portion of this material may be reproduced, in any form or by any means, without permission in writing from the publisher.

13–10. Draw the moment diagram for the fixed-end straight-haunched beam. $E = 1.9(10^3)$ ksi.

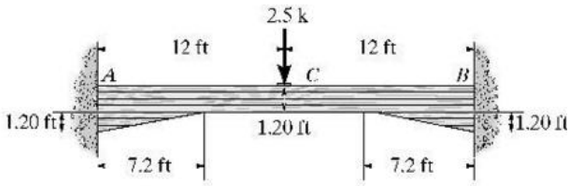

Using Table 13–1,

$a_A = a_B = \frac{7.2}{24} = 0.3$

$r_A = r_B = \frac{2.4 - 1.2}{1.2} = 1$

$C_{AB} = C_{BA} = 0.705$

$k_{AB} = k_{BA} = 10.85$

$b = 0.5$

$M_{AB} = M_{BA} = 0.1640$

$(FEM)_{AB} = M_{AB} = 0.1640(2.5)(24) = 9.84$ k·ft

$M_C = 1.25(12) - 9.84 = 5.16$ k·ft

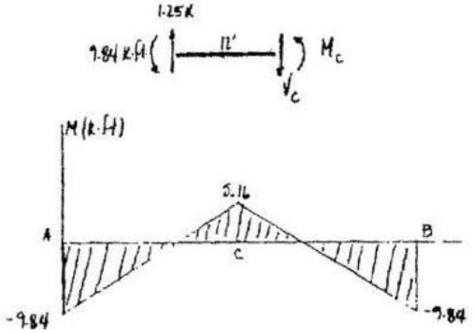

13–11. Determine approximately the stiffness and carry-over factors for the laminated wood beam. Take $E = 11$ GPa. The beam has a thickness of 300 mm. Segment the beam every 1 m for the calculation.

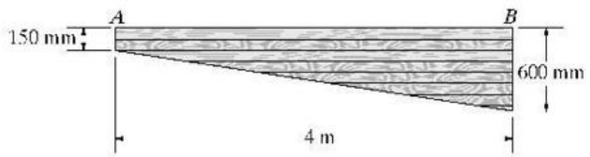

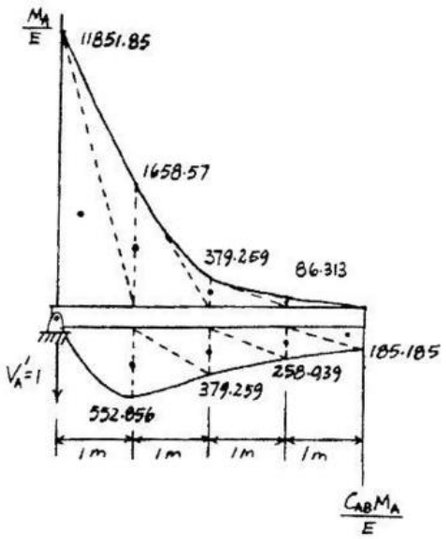

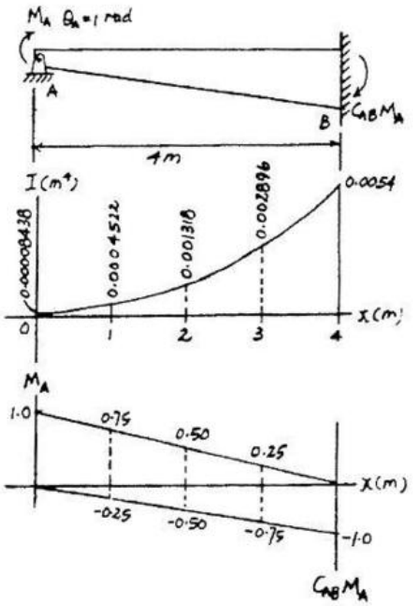

$\zeta + \Sigma M_A = 0$: $-\frac{C_{AB}M_A}{E}\left[(552.85606)(1) + (379.259)(2) + (258.939)(3) + \frac{1}{2}(185.185185)\left(3 + \frac{2}{3}\right)\right] + \frac{M_A}{E}\left[\left(\frac{1}{2}\right)(11851.85)\left(\frac{1}{3}\right) + 1658.57)(1) + (379.259)(2) + (86.313)(3)\right] = 0$

$C_{AB} = 1.916 = 1.92$ **Ans**

$+\uparrow \Sigma F_y = 0$: $\frac{M_A}{E}\left[\frac{1}{2}(11851.85) + 1658.57 + 379.259 + 86.313\right] - \frac{C_{AB}M_A}{E}\left[552.856 + 379.259 + 258.939 + \frac{1}{2}(185.185)\right] = 1$

$K_A = M_A = \frac{E}{5590.67}\text{m}^3$

$= \frac{11(10)^6}{5590.67}\text{kN}\cdot\text{m}$

$= 1967.6\ \text{kN}\cdot\text{m} = 1.97(10^3)\ \text{kN}\cdot\text{m}$ **Ans**

www.e-kitabi.com

c13.qxd 6/24/08 4:47 PM Page 359

© 2009 by R.C. Hibbeler. Published by Pearson Prentice Hall, Pearson Education, Inc., Upper Saddle River, NJ. All rights reserved. This material is protected under all copyright laws as they currently exist. No portion of this material may be reproduced, in any form or by any means, without permission in writing from the publisher.

***13–12.** Determine the moments at A, B, and C by the moment-distribution method. Use Table 13–1 to determine the necessary beam properties. E is constant. Assume the supports at A and C are fixed and the roller support at B is on a rigid base. The girder has a thickness of 1 ft.

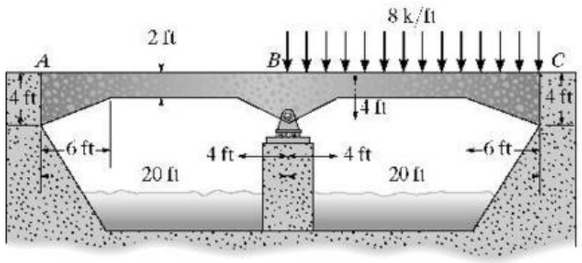

Using Table 13–1

Span AB.

$$a_A = \frac{6}{20} = 0.3, \qquad a_B = \frac{4}{20} = 0.2$$

$$r_B = \frac{4-2}{2} = 1$$

From table, $C_{AB} = 0.622 = C_{CB}$

$C_{BA} = 0.748 = C_{BC}$

$K_{AB} = 10.06 = K_{CB}$

$K_{BA} = 8.37 = K_{BC}$

FEM, $M_{CB} = 0.1089(8)(20)^2 = 348.48$

$M_{BC} = -0.0942(8)(20)^2 = -301.44$

Joint	A	B		C	
Member	AB	BA	BC	CB	
DF	0	0.5	0.5	0	
COF	0.622	0.748	0.748	0.622	
FEM			−301.44	348.48	
	112.74 ←	150.72	150.72 →	112.74	
	113	151	−151	461	**Ans**

13–13. Determine the moments at A, B, and C by the moment-distribution method. Assume the supports at A and C are fixed and a roller support at B is on a rigid base. The girder has a thickness of 4 ft. Use Table 13–1. E is constant. The haunches are straight.

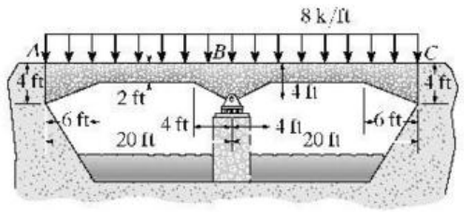

$$a_A = \frac{6}{20} = 0.3 \qquad a_B = \frac{4}{20} = 0.2$$

$$r_A = r_B = \frac{4-2}{2} = 1$$

From Table 13 – 1

For span AB

$C_{AB} = 0.622 \qquad C_{BA} = 0.748$

$K_{AB} = 10.06 \qquad K_{BA} = 8.37$

$$K_{BA} = \frac{K_{BA} EI_C}{L} = \frac{8.37EI_C}{20} = 0.4185EI_C$$

$(\text{FEM})_{AB} = -0.1089(8)(20)^2 = -348.48 \text{ k} \cdot \text{ft}$

$(\text{FEM})_{BA} = 0.0942(8)(20)^2 = 301.44 \text{ k} \cdot \text{ft}$

For span BC

$C_{BC} = 0.748 \qquad C_{CB} = 0.622$

$K_{BC} = 8.37 \qquad K_{CB} = 10.06$

$K_{BC} = 0.4185EI_C$

$(\text{FEM})_{BC} = -301.44 \text{ k} \cdot \text{ft}$

$(\text{FEM})_{CB} = 348.48 \text{ k} \cdot \text{ft}$

Joint	A	B		C	
Mem	AB	BA	BC	CB	
K		$0.4185EI_C$	$0.4185EI_C$		
DF	0	0.5	0.5	0	
COF	0.622	0.748	0.748	0.622	
FEM	−348.48	301.44	−301.44	348.48	
		0	0		
ΣM	−348.48	301.44	−301.44	348.48	k · ft **Ans**

www.e-kitabi.com

c13.qxd 6/24/08 4:47 PM Page 360

© 2009 by R.C. Hibbeler. Published by Pearson Prentice Hall, Pearson Education, Inc., Upper Saddle River, NJ. All rights reserved. This material is protected under all copyright laws as they currently exist. No portion of this material may be reproduced, in any form or by any means, without permission in writing from the publisher.

13–14. Solve Prob. 13–13 using the slope-deflection equations.

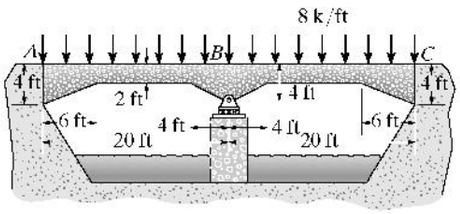

$$a_A = \frac{6}{20} = 0.3 \qquad a_B = \frac{4}{20} = 0.2$$

$$r_A = r_B = \frac{4-2}{2} = 1$$

For span AB

$C_{AB} = 0.622$ $\quad C_{BA} = 0.748$

$K_{AB} = 10.06$ $\quad K_{BA} = 8.37$

$$K_{BA} = \frac{K_{BA}EI_C}{L} = \frac{8.37EI_C}{20} = 0.4185EI_C$$

$$(\text{FEM})_{AB} = -0.1089(8)(20)^2 = -348.48\ \text{k}\cdot\text{ft}$$

$$(\text{FEM})_{BA} = 0.0942(8)(20)^2 = 301.44\ \text{k}\cdot\text{ft}$$

For span BC

$C_{BC} = 0.748$ $\quad C_{CB} = 0.622$

$K_{BC} = 8.37$ $\quad K_{CB} = 10.06$

$K_{BC} = 0.4185EI_C$

$(\text{FEM})_{BC} = -301.44\ \text{k}\cdot\text{ft}$

$(\text{FEM})_{CB} = 348.48\ \text{k}\cdot\text{ft}$

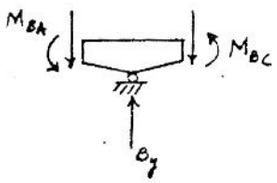

$$M_N = K_N[\theta_N + C_N\theta_F - \psi(1 + C_N)] + (\text{FEM})_N$$

$$M_{AB} = 0.503EI(0 + 0.622\theta_B -) - 348.48$$

$$M_{AB} = 0.312866EI\theta_B - 348.8 \qquad (1)$$

$$M_{BA} = 0.4185EI(\theta_B + 0 - 0) + 301.44$$

$$M_{BA} = 0.4185EI\theta_B + 301.44 \qquad (2)$$

$$M_{BC} = 0.4185EI(\theta_B + 0 - 0) - 301.44$$

$$M_{BC} = 0.4185EI\theta_B - 301.44 \qquad (3)$$

$$M_{CB} = 0.503EI(0 + 0.622\theta_B - 0) + 348.48$$

$$M_{CB} = 0.312866EI\theta_B + 348.48 \qquad (4)$$

Equilibrium

$$M_{BA} + M_{BC} = 0 \qquad (5)$$

Solving Eqs. 1 - 5 :

$\theta_B = 0$

$M_{AB} = -348\ \text{k}\cdot\text{ft}$ **Ans**

$M_{BA} = 301\ \text{k}\cdot\text{ft}$ **Ans**

$M_{BC} = -301\ \text{k}\cdot\text{ft}$ **Ans**

$M_{CB} = 348\ \text{k}\cdot\text{ft}$ **Ans**

www.e-kitabi.com

c13.qxd 6/24/08 4:47 PM Page 361

© 2009 by R.C. Hibbeler. Published by Pearson Prentice Hall, Pearson Education, Inc., Upper Saddle River, NJ. All rights reserved. This material is protected under all copyright laws as they currently exist. No portion of this material may be reproduced, in any form or by any means, without permission in writing from the publisher.

13–15. Apply the moment-distribution method to determine the moment at each joint of the symmetric parabolic haunched frame. Supports A and D are fixed. Use Table 13–2. The members are each 1 ft thick. E is constant.

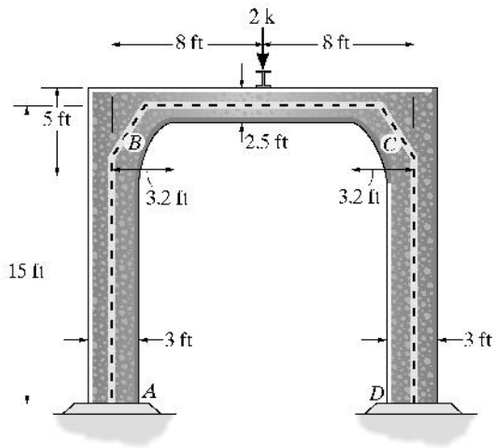

$$a_B = a_C = \frac{3.2}{16} = 0.2$$

$$r_B = r_C = \frac{5 - 2.5}{2.5} = 1$$

$$C_{BC} = C_{CB} = 0.689$$

$$k_{BC} = k_{CB} = 6.41$$

$$(\text{FEM})_{BC} = -0.1459(2)(16) = -4.6688\ \text{k}\cdot\text{ft}$$

$$(\text{FEM})_{CB} = 4.6688\ \text{k}\cdot\text{ft}$$

$$K_{BC} = K_{CB} = \frac{k_{BC} EI_C}{L} = \frac{6.41(E)(\frac{1}{12})(1)(2.5)^3}{16} = 0.5216E$$

$$K_{BA} = K_{CD} = \frac{4EI}{L} = \frac{4E[\frac{1}{12}(1)(3)^3]}{15} = 0.6E$$

$$(\text{DF})_{BA} = (\text{DF})_{CD} = \frac{0.6E}{0.5216E + 0.6E} = 0.535$$

$$(\text{DF})_{BC} = (\text{DF})_{CB} = 0.465$$

Joint	*A*	*B*		*C*		*D*	
Member	*AB*	*BA*	*BC*	*CB*	*CD*	*DC*	
DF	0	0.535	0.465	0.465	0.535	0	
COF	0.5	0.5	0.619	0.619	0.5	0.5	
FEM			−4.6688	4.6688			
		2.498	2.171	−2.171	−2.498		
	1.249		−1.344	1.344		−1.249	
		0.7191	0.6249	−0.6249	−0.7191		
	0.359		−0.387	0.387		−0.359	
		0.207	0.180	−0.180	−0.207		
	0.103		−0.111	0.111		−0.103	
		0.059	0.052	−0.052	−0.059		
	0.029		−0.032	0.032		−0.029	
		0.017	0.015	−0.015	−0.017		
	0.008		−0.009	0.009		−0.008	
		0.005	0.004	−0.004	−0.005		
	0.002		−0.002	0.002		0.002	
		0.001	0.001	−0.001	−0.001		
Σ	1.750	3.51	−3.51	3.51	−3.51	−1.75	k·ft

www.e-kitabi.com

c13.qxd 6/24/08 4:47 PM Page 362

© 2009 by R.C. Hibbeler. Published by Pearson Prentice Hall, Pearson Education, Inc., Upper Saddle River, NJ. All rights reserved. This material is protected under all copyright laws as they currently exist. No portion of this material may be reproduced, in any form or by any means, without permission in writing from the publisher.

***13–16.** Solve Prob. 13–15 using the slope-deflection equations.

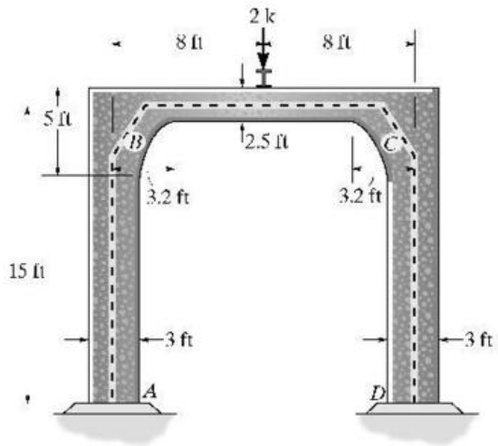

$$a_B = a_C = \frac{3.2}{16} = 0.2$$

$$r_B = r_C = \frac{5 - 2.5}{2.5} = 1$$

$$C_{BC} = C_{CB} = 0.619$$

$$k_{BC} = k_{CB} = 6.41$$

$$(\text{FEM})_{BC} = 0.1459(2)(16) = -4.6688\ \text{k}\cdot\text{ft}$$

$$(\text{FEM})_{CB} = -4.6688\ \text{k}\cdot\text{ft}$$

$$K_{BC} = K_{CB} = \frac{k_{BC} EI_C}{L} = \frac{6.41(E)(\frac{1}{12})(1)(2.5)^3}{16} = 0.5216E$$

$$M_N = K_N[\theta_N + C_N\theta_F - \psi(1 + C_N)] + (\text{FEM})_N$$

$$M_{AB} = \frac{2EI}{15}(0 + \theta_B - 0) + 0$$

$$M_{BA} = \frac{2EI}{15}(2\theta_B + 0 - 0) + 0$$

$$M_{CD} = \frac{2EI}{15}(2\theta_C + 0 - 0) + 0$$

$$M_{DC} = \frac{2EI}{15}(0 + \theta_C - 0) + 0$$

$$M_{BC} = 0.5216E(\theta_B + 0.619(\theta_C) - 0) - 4.6688$$

$$M_{CB} = 0.5216E(\theta_C + 0.619(\theta_B) - 0) + 4.6688$$

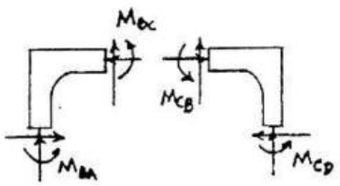

Equilibrium:

$$M_{BA} + M_{BC} = 0$$

$$M_{CB} + M_{CD} = 0$$

or,

$$\frac{2E(\frac{1}{12})(1)(3)^3}{15}(2\theta_B) + 0.5216E[\theta_B + 0.619\theta_C] - 4.6688 = 0$$

$$1.1216\theta_B + 0.32287\theta_C = \frac{4.6688}{E} \qquad (1)$$

$$\frac{2EI(\frac{1}{12})(1)(3)^3}{15}(2\theta_C) + 0.5216E[\theta_C + 0.619\theta_B] + 4.6688 = 0$$

$$1.1216\theta_C + 0.32287\theta_B = -\frac{4.6688}{E} \qquad (2)$$

Solving Eqs. 1 and 2:

$$\theta_B = -\theta_C = \frac{5.84528}{E}$$

$M_{AB} = 1.75\ \text{k}\cdot\text{ft}$ **Ans**

$M_{BA} = 3.51\ \text{k}\cdot\text{ft}$ **Ans**

$M_{BC} = -3.51\ \text{k}\cdot\text{ft}$ **Ans**

$M_{CB} = 3.51\ \text{k}\cdot\text{ft}$ **Ans**

$M_{CD} = -3.51\ \text{k}\cdot\text{ft}$ **Ans**

$M_{DC} = -1.75\ \text{k}\cdot\text{ft}$ **Ans**

www.e-kitabi.com

© 2009 by R.C. Hibbeler. Published by Pearson Prentice Hall, Pearson Education, Inc., Upper Saddle River, NJ. All rights reserved. This material is protected under all copyright laws as they currently exist. No portion of this material may be reproduced, in any form or by any means, without permission in writing from the publisher.

13–17. Use the moment-distribution method to determine the moment at each joint of the frame. The supports at A and C are pinned and the joints at B and D are fixed connected. Use Table 13–1. Assume that E is constant and the members have a thickness of 1 ft. The haunches are straight.

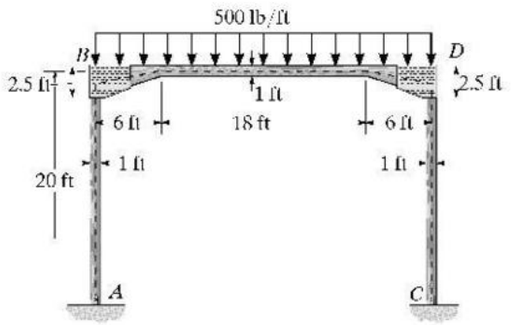

For span BD

$$a_B = a_D = \frac{6}{30} = 0.2$$

$$r_A = r_B = \frac{2.5 - 1}{1} = 1.5$$

From Table 13 - 1

$C_{BD} = C_{DB} = 0.691$

$k_{BD} = k_{DB} = 9.08$

$$K_{BD} = K_{DB} = \frac{kEI_C}{L} = \frac{9.08EI}{30} = 0.30267EI$$

$(\text{FEM})_{BD} = -0.1021(0.5)(30^2) = -45.945 \text{ k} \cdot \text{ft}$

$(\text{FEM})_{DB} = 45.945 \text{ k} \cdot \text{ft}$

For span AB and CD

$$K_{BA} = K_{DC} = \frac{3EI}{20} = 0.15EI$$

$(\text{FEM})_{AB} = (\text{FEM})_{BA} = (\text{FEM})_{DC} = (\text{FEM})_{CD} = 0$

Joint	A	B		D		C
Mem	AB	BA	BD	DB	DC	CD
K		0.15EI	0.3026EI	0.3026EI	0.15EI	
DF	1	0.3314	0.6686	0.6686	0.3314	1
COF		0	0.691	0.691	0	
FEM			−45.95	45.95		
		15.23	30.72	−30.72	−15.23	
			−21.22	21.22		
		7.03	14.19	−14.19	−7.03	
			−9.81	9.81		
		3.25	6.56	−6.56	−3.25	
			−4.53	4.53		
		1.50	3.03	−3.03	−1.50	
			−2.09	2.09		
		0.69	1.40	−1.40	−0.69	
			−0.97	0.97		
		0.32	0.65	−0.65	−0.32	
			−0.45	0.45		
		0.15	0.30	−0.30	−0.15	
			−0.21	0.21		
		0.07	0.14	−0.14	−0.07	
			−0.10	0.10		
		0.03	0.06	−0.06	−0.03	
			−0.04	0.04		
		0.01	0.03	−0.03	−0.01	
ΣM	0	28.3	−28.3	28.3	−28.3	0 k·ft Ans

www.e-kitabi.com

c13.qxd 6/24/08 4:47 PM Page 364

© 2009 by R.C. Hibbeler. Published by Pearson Prentice Hall, Pearson Education, Inc., Upper Saddle River, NJ. All rights reserved. This material is protected under all copyright laws as they currently exist. No portion of this material may be reproduced, in any form or by any means, without permission in writing from the publisher.

13–18. Solve Prob. 13–17 using the slope-deflection equations.

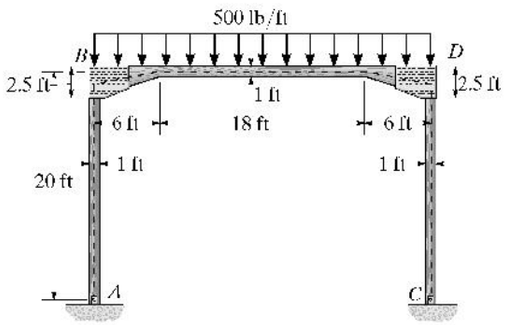

See Prob. 13 - 17 for the tabular data.

For span AB

$$M_N = 3E\frac{I}{L}[\theta_N - \psi] + (\text{FEM})_N$$

$$M_{BA} = 3E(\frac{I}{20})(\theta_B - 0) + 0$$

$$M_{BA} = \frac{3EI}{20}\theta_B \qquad (1)$$

For span BD

$$M_N = K_N[\theta_N + C_N\theta_F - \psi(1 + C_N)] + (\text{FEM})_N$$

$$M_{BD} = 0.30267EI(\theta_B + 0.691\theta_D - 0) - 45.945$$

$$M_{BD} = 0.30267EI\theta_B + 0.20914EI\theta_D - 45.945 \qquad (2)$$

$$M_{DB} = 0.30267EI(\theta_D + 0.691\theta_B - 0) + 45.945$$

$$M_{DB} = 0.30267EI\theta_D + 0.20914EI\theta_B + 45.945 \qquad (3)$$

For span DC

$$M_N = 3E\frac{I}{L}[\theta_N - \psi] + (\text{FEM})_N$$

$$M_{DC} = 3E(\frac{I}{20})(\theta_D - 0) + 0$$

$$M_{DC} = \frac{3EI}{20}\theta_D \qquad (4)$$

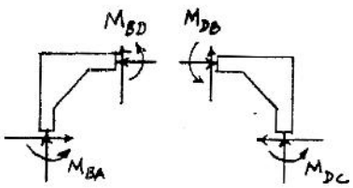

Equilibrium equations

$$M_{BA} + M_{BD} = 0 \quad (5)$$

$$M_{DB} + M_{DC} = 0 \quad (6)$$

Solving Eqs. 1 - 6 :

$$\theta_B = \frac{188.67}{EI} \qquad \theta_D = \frac{-188.67}{EI}$$

$M_{BA} = 28.3\ \text{k}\cdot\text{ft}$ **Ans**

$M_{BD} = -28.3\ \text{k}\cdot\text{ft}$ **Ans**

$M_{DB} = 28.3\ \text{k}\cdot\text{ft}$ **Ans**

$M_{DC} = -28.3\ \text{k}\cdot\text{ft}$ **Ans**

$M_{AB} = M_{CD} = 0$ **Ans**

www.e-kitabi.com

c13.qxd 6/24/08 4:47 PM Page 365

© 2009 by R.C. Hibbeler. Published by Pearson Prentice Hall, Pearson Education, Inc., Upper Saddle River, NJ. All rights reserved. This material is protected under all copyright laws as they currently exist. No portion of this material may be reproduced, in any form or by any means, without permission in writing from the publisher.

13–19. Use the moment-distribution method to determine the moment at each joint of the symmetric bridge frame. Supports F and E are fixed and B and C are fixed connected. Use Table 13–2. Assume E is constant and the members are each 1 ft thick.

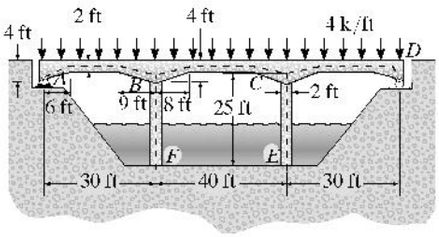

For span AB

$a_A = \frac{6}{30} = 0.2 \qquad a_B = \frac{9}{30} = 0.3$

$r_A = r_B = \frac{4-2}{2} = 1$

From Table 12 - 1

$C_{AB} = 0.683 \qquad C_{BA} = 0.598$

$k_{AB} = 6.73 \quad k_{BA} = 7.68$

$K_{AB} = \frac{6.73EI}{30} = 0.2243EI$

$K_{BA} = \frac{7.68EI}{30} = 0.256EI$

$K_{BA'} = 0.256EI[1 - (0.683)(0.598)]$
$= 0.15144EI$

$(FEM)_{AB} = -0.0911(4)(30^2) = -327.96\ \text{k}\cdot\text{ft}$

$(FEM)_{BA} = 0.1042(4)(30^2) = 375.12\ \text{k}\cdot\text{ft}$

For span CD

$C_{DC} = 0.683 \qquad C_{CD} = 0.598$

$k_{DC} = 6.73 \qquad k_{CD} = 7.68$

$K_{DC} = 0.2243EI$

$K_{CD} = 0.256EI$

$K_{CD'} = 0.15144EI$

$(FEM)_{CD} = -375.12\ \text{k}\cdot\text{ft}$

$(FEM)_{DC} = 327.96\ \text{k}\cdot\text{ft}$

For span BC

$a_B = a_C = \frac{8}{40} = 0.2$

$r_A = r_C = \frac{4-2}{2} = 1$

From table 12 - 1

$C_{BC} = C_{CB} = 0.619$

$k_{BC} = k_{CB} = 6.41$

$K_{BC} = K_{CB} = \frac{6.41EI}{40} = 0.16025EI$

$(FEM)_{BC} = -0.0956(4)(40)^2 = -611.84\ \text{k}\cdot\text{ft}$

$(FEM)_{CB} = 611.84\ \text{k}\cdot\text{ft}$

For span BF

$C_{BF} = 0.5$

$K_{BF} = \frac{4EI}{25} = 0.16EI$

$(FEM)_{BF} = (FEM)_{FB} = 0$

For span CE

$C_{CE} = 0.5$

$K_{CE} = 0.16EI$

$(FEM)_{CE} = (FEM)_{EC} = 0$

Joint	A	F	B				C		E	D
Member	AB	FB	BF	BA	BC	CB	CD	CE	EC	DC
DF	1	0	0.3392	0.3211	0.3397	0.3397	0.3211	0.3392	0	1
COF	0.683		0.5	0.598	0.619	0.619	0.598	0.5		0.683
FEM	−327.96			375.12	−611.84	611.84	−375.12			332.96
	327.96		80.30	76.01	80.41	−80.41	−76.01	−80.30		−327.96
		40.15		224.00	−49.77	49.77	−224.00		−40.15	
			−59.09	−55.95	−59.19	59.19	55.95	59.19		
		−29.55			36.64	−36.64			29.55	
			−12.42	−11.77	−12.45	12.45	11.77	12.42		
		−6.21			7.71	−7.71			6.21	
			−2.61	−2.48	−2.62	2.62	2.48	2.61		
		−1.31			1.62	−1.62			1.31	
			−0.55	−0.52	−0.55	0.55	0.52	0.55		
		−0.27			0.34	−0.34			−0.27	
			−0.11	−0.11	−0.12	0.12	0.11	0.11		
		−0.5			0.07	−0.07			0.05	
			−0.03	−0.02	−0.02	0.02	0.02	0.03		
Σ	0	2.76	5.49	604	−609	609	−604	5.49	−2.76	0
									k·ft	Ans

www.e-kitabi.com

© 2009 by R.C. Hibbeler. Published by Pearson Prentice Hall, Pearson Education, Inc., Upper Saddle River, NJ. All rights reserved. This material is protected under all copyright laws as they currently exist. No portion of this material may be reproduced, in any form or by any means, without permission in writing from the publisher.

***13–20.** Solve Prob. 13–19 using the slope-deflection equations.

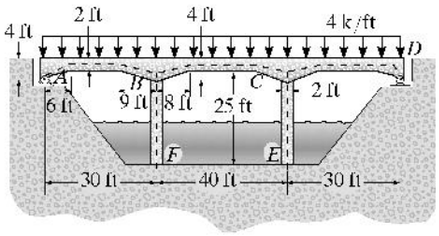

See Prob. 13–19 for the tabulated data.

$M_v = K_v(\theta_N + C_v\theta_F - \psi(1 + C_N)) + (\text{FEM})_v$

For span AB:

$M_{AB} = 0.2243EI(\theta_A + 0.683\theta_B - 0) - 327.96$

$M_{AB} = 0.2243EI\theta_A + 0.15320EI\theta_B - 327.96$ (1)

$M_{BA} = 0.256EI(\theta_B + 0.598\theta_A - 0) + 375.12$

$M_{BA} = 0.256EI\theta_B + 0.15309EI\theta_A + 375.12$ (2)

For span BC:

$M_{BC} = 0.16025EI(\theta_B + 0.619\theta_C - 0) - 611.84$

$M_{BC} = 0.16025EI\theta_B + 0.099194EI\theta_C - 611.84$ (3)

$M_{CB} = 0.16025EI(\theta_C + 0.619\theta_B - 0) + 611.84$

$M_{CB} = 0.16025EI\theta_C + 0.099194EI\theta_B + 611.84$ (4)

For span CD:

$M_{CD} = 0.256EI(\theta_C + 0.598\theta_D - 0) - 375.12$

$M_{CD} = 0.256EI\theta_C + 0.15309EI\theta_D - 375.12$ (5)

$M_{DC} = 0.2243EI(\theta_D + 0.683\theta_C - 0) + 327.96$

$M_{DC} = 0.2243EI\theta_D + 0.15320EI\theta_C + 327.96$ (6)

For span BF:

$M_{BF} = 2E(\frac{I}{25})(2\theta_B + 0 - 0) + 0$

$M_{BF} = 0.16EI\theta_B$ (7)

$M_{FB} = 2E(\frac{I}{25})(2(0) + \theta_B - 0) + 0$

$M_{FB} = 0.08EI\theta_B$ (8)

For span CE:

$M_{CE} = 2E(\frac{I}{25})(2\theta_C + 0 - 0) + 0$

$M_{CE} = 0.16EI\theta_C$ (9)

$M_{EC} = 2E(\frac{I}{25})(2(0) + \theta_C - 0) + 0$

$M_{EC} = 0.08EI\theta_C$ (10)

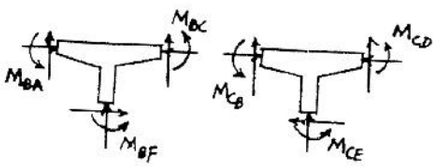

Equilibrium equations:

$M_{AB} = 0$ (11)

$M_{DC} = 0$ (12)

$M_{BA} + M_{BC} + M_{BF} = 0$ (13)

$M_{CB} + M_{CE} + M_{CD} = 0$ (14)

Solving Eqs. 1–14:

$\theta_A = \frac{1438.53}{EI}$ $\theta_B = \frac{34.58}{EI}$ $\theta_C = \frac{-34.58}{EI}$ $\theta_D = \frac{-1438.53}{EI}$

$M_{AB} = 0$ **Ans**

$M_{BA} = 604\ \text{k}\cdot\text{ft}$ **Ans**

$M_{BC} = -610\ \text{k}\cdot\text{ft}$ **Ans**

$M_{BF} = 5.53\ \text{k}\cdot\text{ft}$ **Ans**

$M_{FB} = 2.77\ \text{k}\cdot\text{ft}$ **Ans**

$M_{CB} = 610\ \text{k}\cdot\text{ft}$ **Ans**

$M_{CD} = -604\ \text{k}\cdot\text{ft}$ **Ans**

$M_{CE} = -5.53\ \text{k}\cdot\text{ft}$ **Ans**

$M_{EC} = -2.77\ \text{k}\cdot\text{ft}$ **Ans**

$M_{DC} = 0$ **Ans**

www.e-kitabi.com

c14.qxd 6/24/08 4:58 PM Page 367

© 2009 by R.C. Hibbeler. Published by Pearson Prentice Hall, Pearson Education, Inc., Upper Saddle River, NJ. All rights reserved. This material is protected under all copyright laws as they currently exist. No portion of this material may be reproduced, in any form or by any means, without permission in writing from the publisher.

14–1. Determine the stiffness matrix **K** for the assembly. Take $A = 0.5\ \text{in}^2$ and $E = 29(10^3)$ ksi for each member.

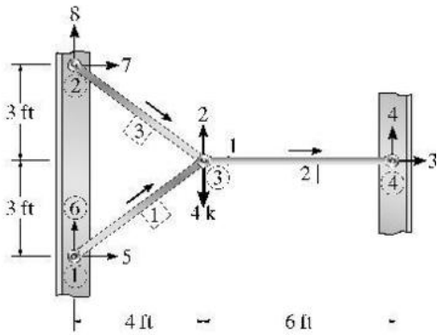

Member 1:

$$\lambda_x = \frac{4-0}{5} = 0.8 \; ; \qquad \lambda_y = \frac{3-0}{5} = 0.6$$

$$\mathbf{k}_1 = \frac{AE}{60}\begin{bmatrix} 0.64 & 0.48 & -0.64 & -0.48 \\ 0.48 & 0.36 & -0.48 & -0.36 \\ -0.64 & -0.48 & 0.64 & 0.48 \\ -0.48 & -0.36 & 0.48 & 0.36 \end{bmatrix}$$

Member 2:

$$\lambda_x = \frac{10-4}{6} = 1 \; ; \qquad \lambda_y = \frac{3-3}{6} = 0$$

$$\mathbf{k}_2 = \frac{AE}{72}\begin{bmatrix} 1 & 0 & -1 & 0 \\ 0 & 0 & 0 & 0 \\ -1 & 0 & 1 & 0 \\ 0 & 0 & 0 & 0 \end{bmatrix}$$

Member 3:

$$\lambda_x = \frac{4-0}{5} = 0.8 \; ; \qquad \lambda_y = \frac{3-6}{5} = -0.6$$

$$\mathbf{k}_3 = \frac{AE}{60}\begin{bmatrix} 0.64 & -0.48 & -0.64 & 0.48 \\ -0.48 & 0.36 & 0.48 & -0.36 \\ -0.64 & 0.48 & 0.64 & -0.48 \\ 0.48 & -0.36 & -0.48 & 0.36 \end{bmatrix}$$

Assembly stiffness matrix: $\mathbf{K} = \mathbf{k}_1 + \mathbf{k}_2 + \mathbf{k}_3$

$$\mathbf{K} = \begin{bmatrix} 510.72 & 0 & -201.39 & 0 & -154.67 & -116 & -154.67 & 116 \\ 0 & 174 & 0 & 0 & -116 & -87.0 & 116 & -87.0 \\ -201.39 & 0 & 201.39 & 0 & 0 & 0 & 0 & 0 \\ 0 & 0 & 0 & 0 & 0 & 0 & 0 & 0 \\ -154.67 & -116 & 0 & 0 & 154.67 & 116 & 0 & 0 \\ -116 & -87.0 & 0 & 0 & 116 & 87.0 & 0 & 0 \\ -154.67 & 116 & 0 & 0 & 0 & 0 & 154.67 & -116 \\ 116 & -87.0 & 0 & 0 & 0 & 0 & -116 & 87.0 \end{bmatrix} \quad \textbf{Ans}$$

14–2. Determine the horizontal and vertical displacements at joint ② of the assembly in Prob. 14–1.

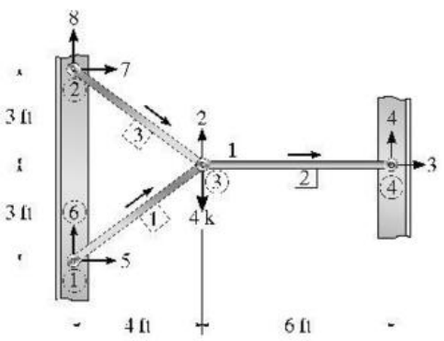

$$\mathbf{D}_1 = \begin{bmatrix} 0 \\ 0 \\ 0 \\ 0 \\ 0 \\ 0 \end{bmatrix}, \qquad \mathbf{Q}_2 = \begin{bmatrix} 0 \\ -4 \end{bmatrix}$$

Use the assembly stiffness matrix of Prob. 14–1 and applying $\mathbf{Q} = \mathbf{KD}$

$$\begin{bmatrix} 0 \\ -4 \\ Q_3 \\ Q_4 \\ Q_5 \\ Q_6 \\ Q_7 \\ Q_8 \end{bmatrix} = \begin{bmatrix} 510.72 & 0 & -201.39 & 0 & -154.67 & -116 & -154.67 & 116 \\ 0 & 174 & 0 & 0 & -116 & -87.0 & 116 & -87.0 \\ -201.39 & 0 & 201.39 & 0 & 0 & 0 & 0 & 0 \\ 0 & 0 & 0 & 0 & 0 & 0 & 0 & 0 \\ -154.67 & -116 & 0 & 0 & 154.67 & 116 & 0 & 0 \\ -116 & -87.0 & 0 & 0 & 116 & 87.0 & 0 & 0 \\ -154.67 & 116 & 0 & 0 & 0 & 0 & 154.67 & -116 \\ 116 & -87.0 & 0 & 0 & 0 & 0 & -116 & 87.0 \end{bmatrix} \begin{bmatrix} D_1 \\ D_2 \\ 0 \\ 0 \\ 0 \\ 0 \\ 0 \\ 0 \end{bmatrix}$$

Partition matrix

$$0 = 510.72(D_1) + 0(D_2)$$
$$-4 = 0(D_1) + 174(D_2)$$

Solving

$$D_1 = 0$$
$$D_2 = -0.02299 \text{ in.}$$

Thus,

$$D_1 = 0 \qquad \textbf{Ans}$$
$$D_2 = -0.0230 \text{ in.} \qquad \textbf{Ans}$$

www.e-kitabi.com

c14.qxd 6/24/08 4:58 PM Page 368

© 2009 by R.C. Hibbeler. Published by Pearson Prentice Hall, Pearson Education, Inc., Upper Saddle River, NJ. All rights reserved. This material is protected under all copyright laws as they currently exist. No portion of this material may be reproduced, in any form or by any means, without permission in writing from the publisher.

14–3. Determine the force in each member of the assembly in Prob. 14–1.

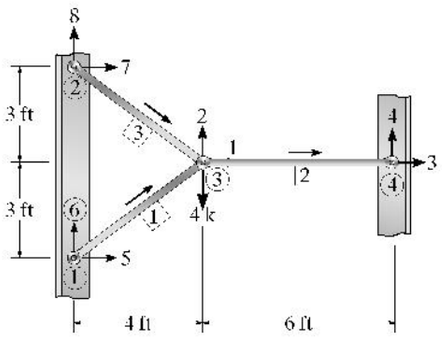

From Prob. 14–2.

$D_1 = D_2 = D_3 = D_4 = D_5 = D_6 = D_7 = D_8 = 0,\ D_2 = -0.02299$

To calculate force in each member, use Eq. 13–23.

$$q_F = \frac{AE}{L}\begin{bmatrix} -\lambda_x & -\lambda_y & \lambda_x & \lambda_y \end{bmatrix}\begin{bmatrix} D_{N_x} \\ D_{N_y} \\ D_{F_x} \\ D_{F_y} \end{bmatrix}$$

Member 1:

$$\lambda_x = \frac{4-0}{5} = 0.8; \quad \lambda_y = \frac{3-0}{5} = 0.6$$

$$q_1 = \frac{AE}{L}\begin{bmatrix} -0.8 & -0.6 & 0.8 & 0.6 \end{bmatrix}\begin{bmatrix} 0 \\ 0 \\ 0 \\ -0.02299 \end{bmatrix}$$

$$q_1 = \frac{0.5(29(10^3))}{60}(0.6)(-0.02299) = -3.33 \text{ k} = 3.33 \text{ k (C)} \quad \textbf{Ans}$$

Member 2:

$$\lambda_x = \frac{10-4}{6} = 1; \quad \lambda_y = \frac{3-3}{6} = 0$$

$$q_2 = \frac{AE}{L}\begin{bmatrix} -1 & 0 & 1 & 0 \end{bmatrix}\begin{bmatrix} 0 \\ -0.02299 \\ 0 \\ 0 \end{bmatrix}$$

$$q_2 = 0 \quad \textbf{Ans}$$

Member 3:

$$\lambda_x = \frac{4-0}{5} = 0.8; \quad \lambda_y = \frac{3-6}{5} = -0.6$$

$$q_3 = \frac{AE}{L}\begin{bmatrix} -0.8 & 0.6 & 0.8 & -0.6 \end{bmatrix}\begin{bmatrix} 0 \\ 0 \\ 0 \\ -0.02299 \end{bmatrix}$$

$$q_3 = \frac{0.5(29(10^3))}{60}(-0.6)(-0.02299) = 3.33 \text{ k (T)} \quad \textbf{Ans}$$

www.e-kitabi.com

c14.qxd 6/24/08 4:58 PM Page 369

© 2009 by R.C. Hibbeler. Published by Pearson Prentice Hall, Pearson Education, Inc., Upper Saddle River, NJ. All rights reserved. This material is protected under all copyright laws as they currently exist. No portion of this material may be reproduced, in any form or by any means, without permission in writing from the publisher.

***14–4.** Determine the stiffness matrix **K** for the truss. Take $A = 0.0015\ \text{m}^2$ and $E = 200\ \text{GPa}$ for each member.

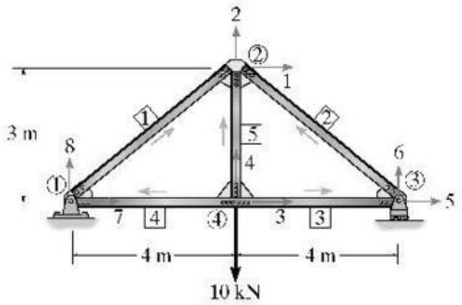

Member 1 : $\lambda_x = \frac{4-0}{5} = 0.8 \qquad \lambda_y = \frac{3-0}{5} = 0.6$

$$\mathbf{k}_1 = AE\begin{bmatrix} 0.128 & 0.096 & -0.128 & -0.096 \\ 0.096 & 0.072 & -0.096 & -0.072 \\ -0.128 & -0.096 & 0.128 & 0.096 \\ -0.096 & -0.072 & 0.096 & 0.072 \end{bmatrix}$$

Member 2 : $\lambda_x = \frac{4-8}{5} = -0.8 \qquad \lambda_y = \frac{3-0}{5} = 0.6$

$$\mathbf{k}_2 = AE\begin{bmatrix} 0.128 & -0.096 & -0.128 & 0.096 \\ -0.096 & 0.072 & 0.096 & -0.072 \\ -0.128 & 0.096 & 0.128 & -0.096 \\ 0.096 & -0.072 & -0.096 & 0.072 \end{bmatrix}$$

Member 3 : $\lambda_x = \frac{8-4}{4} = 1 \qquad \lambda_y = 0$

$$\mathbf{k}_3 = AE\begin{bmatrix} 0.25 & 0 & -0.25 & 0 \\ 0 & 0 & 0 & 0 \\ -0.25 & 0 & 0.25 & 0 \\ 0 & 0 & 0 & 0 \end{bmatrix}$$

Member 4 : $\lambda_x = \frac{0-4}{4} = -1 \qquad \lambda_y = 0$

$$\mathbf{k}_4 = AE\begin{bmatrix} 0.25 & 0 & -0.25 & 0 \\ 0 & 0 & 0 & 0 \\ -0.25 & 0 & 0.25 & 0 \\ 0 & 0 & 0 & 0 \end{bmatrix}$$

Member 5 : $\lambda_x = 0 \qquad \lambda_y = \frac{3-0}{3} = 1$

$$\mathbf{k}_5 = AE\begin{bmatrix} 0 & 0 & 0 & 0 \\ 0 & 0.3333 & 0 & -0.3333 \\ 0 & 0 & 0 & 0 \\ 0 & -0.3333 & 0 & 0.3333 \end{bmatrix}$$

Structure stiffness matrix

$$\mathbf{K} = \mathbf{k}_1 + \mathbf{k}_2 + \mathbf{k}_3 + \mathbf{k}_4 + \mathbf{k}_5$$

$$\mathbf{K} = AE\begin{bmatrix} 0.256 & 0 & 0 & 0 & -0.128 & 0.096 & -0.128 & -0.096 \\ 0 & 0.4773 & 0 & -0.3333 & 0.096 & -0.072 & -0.096 & -0.072 \\ 0 & 0 & 0.50 & 0 & -0.25 & 0 & -0.25 & 0 \\ 0 & -0.3333 & 0 & 0.3333 & 0 & 0 & 0 & 0 \\ -0.128 & 0.096 & -0.25 & 0 & 0.378 & -0.096 & 0 & 0 \\ 0.096 & -0.072 & 0 & 0 & -0.096 & 0.072 & 0 & 0 \\ -0.128 & -0.096 & -0.25 & 0 & 0 & 0 & 0.378 & 0.096 \\ -0.096 & -0.072 & 0 & 0 & 0 & 0 & 0.096 & 0.072 \end{bmatrix} \quad \text{Ans}$$

www.e-kitabi.com

c14.qxd 6/24/08 4:58 PM Page 370

© 2009 by R.C. Hibbeler. Published by Pearson Prentice Hall, Pearson Education, Inc., Upper Saddle River, NJ. All rights reserved. This material is protected under all copyright laws as they currently exist. No portion of this material may be reproduced, in any form or by any means, without permission in writing from the publisher.

14–5. Determine the vertical displacement at joint ④ and the force in member [4]. Take $A = 0.0015\ \text{m}^2$ and $E = 200\ \text{GPa}$.

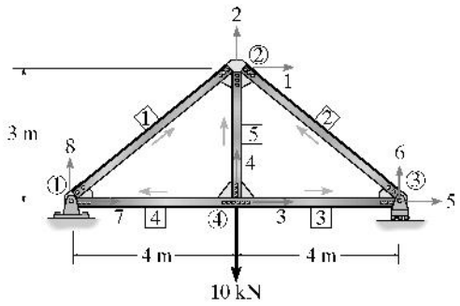

$$\mathbf{D}_k = \begin{bmatrix} 0 \\ 0 \\ 0 \end{bmatrix} \qquad \mathbf{Q}_k = \begin{bmatrix} 0 \\ 0 \\ 0 \\ -10 \\ 0 \end{bmatrix}$$

Use the structure stiffness matrix of Prob. 14–4 and applying $\mathbf{Q} = \mathbf{KD}$, we have

$$\begin{bmatrix} 0 \\ 0 \\ 0 \\ -10 \\ 0 \\ Q_6 \\ Q_7 \\ Q_8 \end{bmatrix} = AE \begin{bmatrix} 0.256 & 0 & 0 & 0 & -0.128 & 0.096 & -0.128 & -0.096 \\ 0 & 0.4773 & 0 & -0.3333 & 0.096 & -0.072 & -0.096 & -0.072 \\ 0 & 0 & 0.50 & 0 & -0.25 & 0 & -0.25 & 0 \\ 0 & -0.3333 & 0 & 0.3333 & 0 & 0 & 0 & 0 \\ -0.128 & 0.096 & -0.25 & 0 & 0.378 & -0.096 & 0 & 0 \\ 0.096 & -0.072 & 0 & 0 & -0.096 & 0.072 & 0 & 0 \\ -0.128 & -0.096 & -0.25 & 0 & 0 & 0 & 0.378 & 0.096 \\ -0.096 & -0.072 & 0 & 0 & 0 & 0 & 0.096 & 0.072 \end{bmatrix} \begin{bmatrix} D_1 \\ D_2 \\ D_3 \\ D_4 \\ D_5 \\ 0 \\ 0 \\ 0 \end{bmatrix}$$

Partition matrix and solve the linear equations.

$$D_4 = \frac{-135.00}{AE} = \frac{-135.00}{(0.0015)(200)(10^6)} = -4.5(10^{-4})\ \text{m} = -0.45\ \text{mm} \qquad \textbf{Ans}$$

$$D_1 = \frac{26.667}{AE}$$

$$D_3 = \frac{-105.0}{AE} =$$

$$D_4 = \frac{26.667}{AE} = \frac{26.667}{0.0015(200)(10^6)} = 0.08889(10^{-3})$$

$$D_5 = \frac{53.333}{AE}$$

Member 4: $\lambda_x = -1; \quad \lambda_y = 0$

$$q_4 = \frac{0.0015(200)(10^6)}{4}[1 \quad 0 \quad -1 \quad 0] \begin{bmatrix} 0.08889(10^{-3}) \\ -0.45(10^{-3}) \\ 0 \\ 0 \end{bmatrix}$$

$$q_4 = \frac{0.0015(200)(10^6)}{4}(1)(-0.08889(10^{-3})) = 6.67\ \text{k (T)} \qquad \textbf{Ans}$$

www.e-kitabi.com

© 2009 by R.C. Hibbeler. Published by Pearson Prentice Hall, Pearson Education, Inc., Upper Saddle River, NJ. All rights reserved. This material is protected under all copyright laws as they currently exist. No portion of this material may be reproduced, in any form or by any means, without permission in writing from the publisher.

14–6. Determine the stiffness matrix **K** for the truss. Take $A = 0.75\ \text{in.}^2$, $E = 29(10^3)$ ksi. Assume all joints are pin-connected.

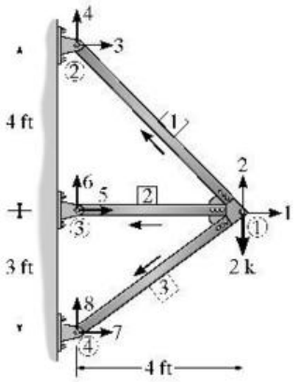

Member 1:

$$\lambda_x = \frac{0-4}{4\sqrt{2}} = -\frac{1}{\sqrt{2}}; \qquad \lambda_y = \frac{7-3}{4\sqrt{2}} = \frac{1}{\sqrt{2}}$$

$$\mathbf{k}_1 = \frac{AE}{12}\begin{bmatrix} 0.0884 & -0.0884 & -0.0884 & 0.0884 \\ -0.0884 & 0.0884 & 0.0884 & -0.0884 \\ -0.0884 & 0.0884 & 0.0884 & -0.0884 \\ 0.0884 & -0.0884 & -0.0884 & 0.0884 \end{bmatrix}$$

Member 2:

$$\lambda_x = \frac{0-4}{4} = -1; \qquad \lambda_y = \frac{3-3}{4} = 0$$

$$\mathbf{k}_2 = \frac{AE}{12}\begin{bmatrix} 0.25 & 0 & -0.25 & 0 \\ 0 & 0 & 0 & 0 \\ -0.25 & 0 & 0.25 & 0 \\ 0 & 0 & 0 & 0 \end{bmatrix}$$

Member 3:

$$\lambda_x = \frac{0-4}{5} = -0.8; \qquad \lambda_y = \frac{0-3}{5} = -0.6$$

$$\mathbf{k}_3 = \frac{AE}{12}\begin{bmatrix} 0.128 & 0.096 & -0.128 & -0.096 \\ 0.096 & 0.072 & -0.096 & -0.072 \\ -0.128 & -0.096 & 0.128 & 0.096 \\ -0.096 & -0.072 & 0.096 & 0.072 \end{bmatrix}$$

Structure stiffness matrix: $\mathbf{K} = \mathbf{k}_1 + \mathbf{k}_2 + \mathbf{k}_3$

Substituting $A = 0.75\ \text{in}^2$, $E = 29(10^3)$ ksi.

$$\mathbf{K} = \begin{bmatrix} 845.3289 & 13.79611 & -160.2039 & 160.2039 & -453.125 & 0 & -232 & -174 \\ 13.79611 & 290.7039 & 160.2039 & -160.2039 & 0 & 0 & -174 & -130.5 \\ -160.2039 & 160.2039 & 160.2039 & -160.2039 & 0 & 0 & 0 & 0 \\ 160.2039 & -160.2039 & -160.2039 & 160.2039 & 0 & 0 & 0 & 0 \\ -453.125 & 0 & 0 & 0 & 453.125 & 0 & 0 & 0 \\ 0 & 0 & 0 & 0 & 0 & 0 & 0 & 0 \\ -232 & -174 & 0 & 0 & 0 & 0 & 232 & 174 \\ -174 & -130.5 & 0 & 0 & 0 & 0 & 174 & 130.5 \end{bmatrix}$$ Ans

14–7. Determine the vertical deflection of joint ① and the force in member 2 of the truss in Prob. 14–6.

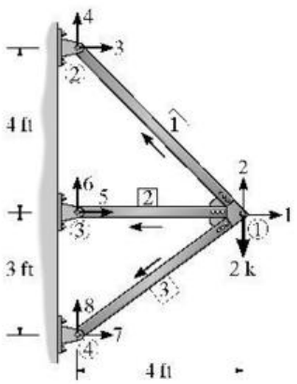

$$\mathbf{D}_k = \begin{bmatrix} 0 \\ 0 \\ 0 \\ 0 \\ 0 \\ 0 \end{bmatrix} \qquad \mathbf{Q}_k = \begin{bmatrix} 0 \\ -2 \end{bmatrix}$$

Using the structure stiffness matrix of Prob. 14–6 and applying $\mathbf{Q} = \mathbf{KD}$

$$\begin{bmatrix} 0 \\ -2 \\ Q_3 \\ Q_4 \\ Q_5 \\ Q_6 \\ Q_7 \\ Q_8 \end{bmatrix} = \left[\begin{array}{cc|cccccc} 845.3289 & 13.79611 & -160.2039 & 160.2039 & -453.125 & 0 & -232 & -174 \\ 13.79611 & 290.7039 & 160.2039 & -160.2039 & 0 & 0 & -174 & -130.5 \\ \hline -160.2039 & 160.2039 & 160.2039 & -160.2039 & 0 & 0 & 0 & 0 \\ 160.2039 & -160.2039 & -160.2039 & 160.2039 & 0 & 0 & 0 & 0 \\ -453.125 & 0 & 0 & 0 & 453.125 & 0 & 0 & 0 \\ 0 & 0 & 0 & 0 & 0 & 0 & 0 & 0 \\ -232 & -174 & 0 & 0 & 0 & 0 & 232 & 174 \\ -174 & -130.5 & 0 & 0 & 0 & 0 & 174 & 130.5 \end{array}\right] \begin{bmatrix} D_1 \\ D_2 \\ \hline 0 \\ 0 \\ 0 \\ 0 \\ 0 \\ 0 \end{bmatrix}$$

Partition matrix:

$$0 = 845.3289 D_1 + 13.79611 D_2$$
$$-2 = 13.79611 D_1 + 290.7039 D_2$$

Solving the above linear equations:

$$D_1 = 0.11237(10^{-3})\ \text{in.} \quad ; \quad D_2 = -6.8852(10^{-3})\ \text{in.}$$ Ans

To find force in member 2:

$$\lambda_x = \frac{0-4}{4} = -1; \qquad \lambda_y = \frac{3-3}{4} = 0$$

$$q_2 = \frac{0.75(29(10^3))}{48}[1 \quad 0 \quad -1 \quad 0](10^{-3})\begin{bmatrix} 0.11237 \\ -6.8852 \\ 0 \\ 0 \end{bmatrix}$$

$$q_2 = 50.9\ \text{lb}$$ Ans

www.e-kitabi.com

© 2009 by R.C. Hibbeler. Published by Pearson Prentice Hall, Pearson Education, Inc., Upper Saddle River, NJ. All rights reserved. This material is protected under all copyright laws as they currently exist. No portion of this material may be reproduced, in any form or by any means, without permission in writing from the publisher.

***14–8.** Determine the stiffness matrix **K** for the truss. Take $A = 0.0015\ \text{m}^2$ and $E = 200\ \text{GPa}$ for each member.

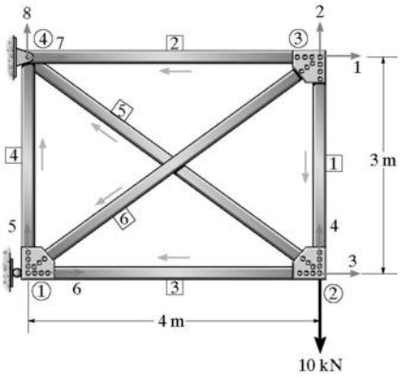

Member 1: $\lambda_x = 0 \qquad \lambda_y = \dfrac{0-3}{3} = -1$

$$\mathbf{k}_1 = AE\begin{bmatrix} 0 & 0 & 0 & 0 \\ 0 & 0.3333 & 0 & -0.3333 \\ 0 & 0 & 0 & 0 \\ 0 & -0.3333 & 0 & 0.3333 \end{bmatrix}$$

Member 2: $\lambda_x = \dfrac{0-4}{4} = -1 \qquad \lambda_y = 0$

$$\mathbf{k}_2 = AE\begin{bmatrix} 0.25 & 0 & -0.25 & 0 \\ 0 & 0 & 0 & 0 \\ -0.25 & 0 & 0.25 & 0 \\ 0 & 0 & 0 & 0 \end{bmatrix}$$

Member 3: $\lambda_x = \dfrac{0-4}{4} = -1 \qquad \lambda_y = 0$

$$\mathbf{k}_3 = AE\begin{bmatrix} 0.25 & 0 & -0.25 & 0 \\ 0 & 0 & 0 & 0 \\ -0.25 & 0 & 0.25 & 0 \\ 0 & 0 & 0 & 0 \end{bmatrix}$$

Member 4: $\lambda_x = 0 \qquad \lambda_y = \dfrac{3-0}{3} = 1$

$$\mathbf{k}_4 = AE\begin{bmatrix} 0 & 0 & 0 & 0 \\ 0 & 0.3333 & 0 & -0.3333 \\ 0 & 0 & 0 & 0 \\ 0 & -0.3333 & 0 & 0.3333 \end{bmatrix}$$

Member 5: $\lambda_x = \dfrac{0-4}{5} = -0.8 \qquad \lambda_y = \dfrac{3-0}{5} = 0.6$

$$\mathbf{k}_5 = AE\begin{bmatrix} 0.128 & -0.096 & -0.128 & 0.096 \\ -0.096 & 0.072 & 0.096 & -0.072 \\ -0.128 & 0.096 & 0.128 & -0.096 \\ 0.096 & -0.072 & -0.096 & 0.072 \end{bmatrix}$$

Member 6: $\lambda_x = \dfrac{0-4}{5} = -0.8 \qquad \lambda_y = \dfrac{0-3}{5} = -0.6$

$$\mathbf{k}_6 = AE\begin{bmatrix} 0.128 & 0.096 & -0.128 & -0.096 \\ 0.096 & 0.072 & -0.096 & -0.072 \\ -0.128 & -0.096 & 0.128 & 0.096 \\ -0.096 & -0.072 & 0.096 & 0.072 \end{bmatrix}$$

Structure stiffness matrix

$$\mathbf{K} = \mathbf{k}_1 + \mathbf{k}_2 + \mathbf{k}_3 + \mathbf{k}_4 + \mathbf{k}_5 + \mathbf{k}_6$$

$$\mathbf{K} = AE\begin{bmatrix} 0.378 & 0.096 & 0 & 0 & -0.096 & -0.128 & -0.25 & 0 \\ 0.096 & 0.4053 & 0 & -0.3333 & -0.072 & -0.096 & 0 & 0 \\ 0 & 0 & 0.378 & -0.096 & 0 & -0.25 & -0.128 & 0.096 \\ 0 & -0.3333 & -0.096 & 0.4053 & 0 & 0 & 0.096 & -0.072 \\ -0.096 & -0.072 & 0 & 0 & 0.4053 & 0.096 & 0 & -0.3333 \\ -0.128 & -0.096 & -0.25 & 0 & 0.096 & 0.378 & 0 & 0 \\ -0.25 & 0 & -0.128 & 0.096 & 0 & 0 & 0.378 & -0.096 \\ 0 & 0 & 0.096 & -0.072 & -0.3333 & 0 & -0.096 & 0.4053 \end{bmatrix}$$

Ans

www.e-kitabi.com

© 2009 by R.C. Hibbeler. Published by Pearson Prentice Hall, Pearson Education, Inc., Upper Saddle River, NJ. All rights reserved. This material is protected under all copyright laws as they currently exist. No portion of this material may be reproduced, in any form or by any means, without permission in writing from the publisher.

14–9. Determine the force in member 6. Take $A = 0.0015\ \text{m}^2$ and $E = 200\ \text{GPa}$ for each member.

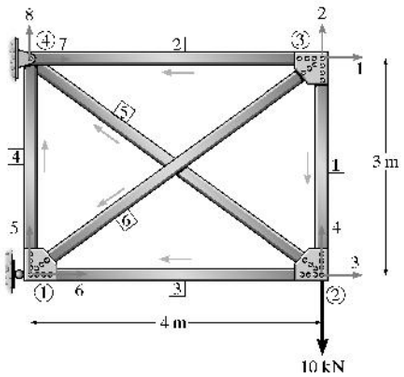

$$\mathbf{D}_k = \begin{bmatrix} 0 \\ 0 \\ 0 \end{bmatrix} \qquad \mathbf{Q}_k = \begin{bmatrix} 0 \\ 0 \\ 0 \\ -10 \\ 0 \end{bmatrix}$$

Use the structure stiffness matrix of Prob. 14–8 and applying $\mathbf{Q} = \mathbf{KD}$, we have

$$\begin{bmatrix} 0 \\ 0 \\ 0 \\ -10 \\ 0 \\ Q_6 \\ Q_7 \\ Q_8 \end{bmatrix} = AE \begin{bmatrix} 0.378 & 0.096 & 0 & 0 & -0.096 & -0.128 & -0.25 & 0 \\ 0.096 & 0.4053 & 0 & -0.3333 & -0.072 & -0.096 & 0 & 0 \\ 0 & 0 & 0.378 & -0.096 & 0 & -0.25 & -0.128 & 0.096 \\ 0 & -0.3333 & -0.096 & 0.4053 & 0 & 0 & 0.096 & -0.072 \\ -0.096 & -0.072 & 0 & 0 & 0.4053 & 0.096 & 0 & -0.3333 \\ -0.128 & -0.096 & -0.25 & 0 & 0.096 & 0.378 & 0 & 0 \\ -0.25 & 0 & -0.128 & 0.096 & 0 & 0 & 0.378 & -0.096 \\ 0 & 0 & 0.096 & -0.072 & -0.3333 & 0 & -0.096 & 0.4053 \end{bmatrix} \begin{bmatrix} D_1 \\ D_2 \\ D_3 \\ D_4 \\ D_5 \\ 0 \\ 0 \\ 0 \end{bmatrix}$$

Partition matrix

$$\begin{bmatrix} 0 \\ 0 \\ 0 \\ -10 \\ 0 \end{bmatrix} = AE \begin{bmatrix} 0.378 & 0.096 & 0 & 0 & -0.096 \\ 0.096 & 0.4053 & 0 & -0.3333 & -0.072 \\ 0 & 0 & 0.378 & -0.096 & 0 \\ 0 & -0.3333 & -0.096 & 0.4053 & 0 \\ -0.096 & -0.072 & 0 & 0 & 0.4053 \end{bmatrix} \begin{bmatrix} D_1 \\ D_2 \\ D_3 \\ D_4 \\ D_5 \end{bmatrix} + \begin{bmatrix} 0 \\ 0 \\ 0 \\ 0 \\ 0 \end{bmatrix}$$

$$0 = AE(0.378D_1 + 0.096D_2 - 0.096D_5) \qquad (1)$$

$$0 = AE(0.096D_1 + 0.4053D_2 - 0.3333D_4 - 0.072D_5) \qquad (2)$$

$$0 = AE(0.378D_3 - 0.096D_4) \qquad (3)$$

$$-10 = AE(-0.3333D_2 - 0.096D_3 + 0.4053D_4) \qquad (4)$$

$$0 = AE(-0.096D_1 - 0.072D_2 + 0.4053D_5) \qquad (5)$$

Solving the above equations yields:

$$D_1 = \frac{23.3517}{AE}, \quad D_2 = \frac{-105.084}{AE}, \quad D_3 = \frac{-30.0213}{AE}, \quad D_4 = \frac{-118.209}{AE}, \quad D_5 = \frac{-13.1367}{AE}$$

For member 6

$$\lambda_x = -0.8, \quad \lambda_y = -0.6, \quad L = 5\ \text{m}$$

$$q_6 = \frac{AE}{5}[0.8 \quad 0.6 \quad -0.8 \quad -0.6] \frac{1}{AE} \begin{bmatrix} 23.3517 \\ -105.084 \\ 0 \\ -13.1367 \end{bmatrix}$$

$$= -7.297\ \text{kN} = 7.30\ \text{kN (C)} \qquad \textbf{Ans}$$

www.e-kitabi.com

c14.qxd 6/24/08 4:58 PM Page 374

© 2009 by R.C. Hibbeler. Published by Pearson Prentice Hall, Pearson Education, Inc., Upper Saddle River, NJ. All rights reserved. This material is protected under all copyright laws as they currently exist. No portion of this material may be reproduced, in any form or by any means, without permission in writing from the publisher.

14–10. Determine the force in member 1 if this member was 10 mm too long before it was fitted into the truss. For the solution remove the 10-kN load. Take $A = 0.0015\ \text{m}^2$ and $E = 200\ \text{GPa}$ for each member.

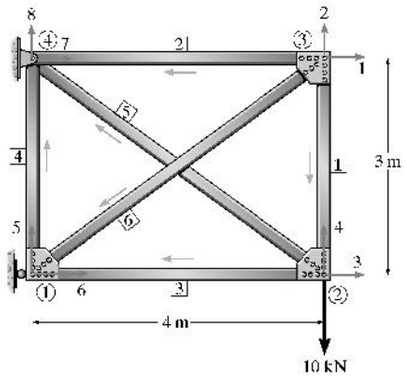

$$\begin{bmatrix}(Q_1)_0\\(Q_2)_0\\(Q_3)_0\\(Q_4)_0\end{bmatrix} = \frac{AE(0.01)}{3}\begin{bmatrix}0\\-1\\0\\1\end{bmatrix} = AE\begin{bmatrix}0\\-0.003333\\0\\0.003333\end{bmatrix}$$

Use the structure stiffness matrix of Prob. 14–8.

$$\begin{bmatrix}0\\0\\0\\0\\0\\Q_6\\Q_7\\Q_8\end{bmatrix} = AE\begin{bmatrix}0.378 & 0.096 & 0 & 0 & -0.096 & -0.128 & -0.25 & 0\\ 0.096 & 0.4053 & 0 & -0.3333 & -0.072 & -0.096 & 0 & 0\\ 0 & 0 & 0.378 & -0.096 & 0 & -0.25 & -0.128 & 0.096\\ 0 & -0.3333 & -0.096 & 0.4053 & 0 & 0 & 0.096 & -0.072\\ -0.096 & -0.072 & 0 & 0 & 0.4053 & 0.096 & 0 & -0.3333\\ -0.128 & -0.096 & -0.25 & 0 & 0.096 & 0.378 & 0 & 0\\ -0.25 & 0 & -0.128 & 0.096 & 0 & 0 & 0.378 & -0.096\\ 0 & 0 & 0.096 & -0.072 & -0.3333 & 0 & -0.096 & 0.4053\end{bmatrix}\begin{bmatrix}D_1\\D_2\\D_3\\D_4\\D_5\\0\\0\\0\end{bmatrix} + AE\begin{bmatrix}0\\-0.00333\\0\\0.003333\\0\\0\\0\\0\end{bmatrix}$$

$$0 = 0.378D_1 + 0.096D_2 + 0D_3 + 0D_4 - 0.096D_5 + 0 \qquad (1)$$

$$0 = 0.096D_1 + 0.4053D_2 + 0D_3 - 0.3333D_4 - 0.072D_5 - 0.003333 \qquad (2)$$

$$0 = 0D_1 + 0D_2 + 0.378D_3 - 0.096D_4 + 0D_5 + 0 \qquad (3)$$

$$0 = 0D_1 - 0.3333D_2 - 0.096D_3 + 0.4053D_4 + 0D_5 + 0.003333 \qquad (4)$$

$$0 = -0.096D_1 - 0.072D_2 + 0D_3 + 0D_4 + 0.4053D_5 + 0 \qquad (5)$$

Solving the above equations yields:

$$D_1 = -0.0011111, \quad D_2 = 0.005$$
$$D_3 = -0.0011111, \quad D_4 = -0.004375$$
$$D_5 = 0.000625$$

The force in member 1

$$\lambda_x = 0, \quad \lambda_y = -1, \quad L = 3\ \text{m}$$

$$q_1 = \frac{0.0015(200)(10^9)}{3}[0 \quad 1 \quad 0 \quad -1]\begin{bmatrix}-0.001111\\0.0050000\\-0.001111\\-0.004375\end{bmatrix} - (0.0015)(200)(10^9)(0.003333)$$

$$= -62.5\ \text{kN} = 62.5\ \text{kN(C)} \qquad \textbf{Ans}$$

www.e-kitabi.com

c14.qxd 6/24/08 4:58 PM Page 375

© 2009 by R.C. Hibbeler. Published by Pearson Prentice Hall, Pearson Education, Inc., Upper Saddle River, NJ. All rights reserved. This material is protected under all copyright laws as they currently exist. No portion of this material may be reproduced, in any form or by any means, without permission in writing from the publisher.

14–11. Determine the stiffness matrix **K** for the truss. AE is constant.

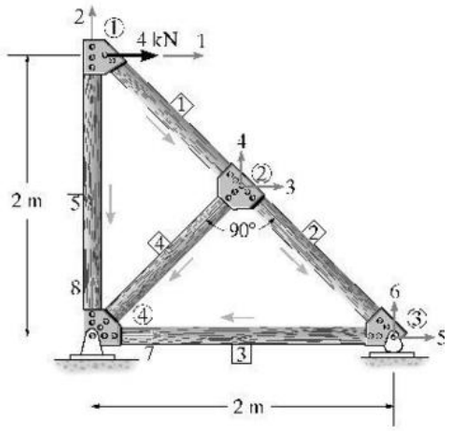

Member 1 : $\lambda_x = \frac{1-0}{\sqrt{2}} = 0.7071 \qquad \lambda_y = \frac{1-2}{\sqrt{2}} = -0.7071$

$$\mathbf{k}_1 = AE\begin{bmatrix} 0.3536 & -0.3536 & -0.3536 & 0.3536 \\ -0.3536 & 0.3536 & 0.3536 & -0.3536 \\ -0.3536 & 0.3536 & 0.3536 & -0.3536 \\ 0.3536 & -0.3536 & -0.3536 & 0.3536 \end{bmatrix}$$

Member 2 : $\lambda_x = \frac{2-1}{\sqrt{2}} = 0.7071 \qquad \lambda_y = \frac{0-1}{\sqrt{2}} = -0.7071$

$$\mathbf{k}_2 = AE\begin{bmatrix} 0.3536 & -0.3536 & -0.3536 & 0.3536 \\ -0.3536 & 0.3536 & 0.3536 & -0.3536 \\ -0.3536 & 0.3536 & 0.3536 & -0.3536 \\ 0.3536 & -0.3536 & -0.3536 & 0.3536 \end{bmatrix}$$

Member 3 : $\lambda_x = \frac{0-2}{2} = -1 \qquad \lambda_y = 0$

$$\mathbf{k}_3 = AE\begin{bmatrix} 0.5 & 0 & -0.5 & 0 \\ 0 & 0 & 0 & 0 \\ -0.5 & 0 & 0.5 & 0 \\ 0 & 0 & 0 & 0 \end{bmatrix}$$

Member 4 : $\lambda_x = \frac{0-1}{\sqrt{2}} = -0.7071 \qquad \lambda_y = \frac{0-1}{\sqrt{2}} = -0.7071$

$$\mathbf{k}_4 = AE\begin{bmatrix} 0.3536 & 0.3536 & -0.3536 & -0.3536 \\ 0.3536 & 0.3536 & -0.3536 & -0.3536 \\ -0.3536 & -0.3536 & 0.3536 & 0.3536 \\ -0.3536 & -0.3536 & -0.3536 & 0.3536 \end{bmatrix}$$

Member 5 : $\lambda_x = 0 \qquad \lambda_y = \frac{0-2}{2} = -1$

$$\mathbf{k}_5 = AE\begin{bmatrix} 0 & 0 & 0 & 0 \\ 0 & 0.5 & 0 & -0.5 \\ 0 & 0 & 0 & 0 \\ 0 & -0.5 & 0 & 0.5 \end{bmatrix}$$

Structure stiffness matrix

$$\mathbf{K} = \mathbf{k}_1 + \mathbf{k}_2 + \mathbf{k}_3 + \mathbf{k}_4 + \mathbf{k}_5$$

$$\mathbf{K} = AE\begin{bmatrix} 0.3536 & -0.3536 & -0.3536 & 0.3536 & 0 & 0 & 0 & 0 \\ -0.3536 & 0.8536 & 0.3536 & -0.3536 & 0 & 0 & 0 & -0.5 \\ -0.3536 & 0.3536 & 1.0607 & -0.3536 & -0.3536 & 0.3536 & -0.3536 & -0.3536 \\ 0.3536 & -0.3536 & -0.3536 & 1.0608 & 0.3536 & -0.3536 & -0.3536 & -0.3536 \\ 0 & 0 & -0.3536 & 0.3536 & 0.8536 & -0.3536 & -0.5 & 0 \\ 0 & 0 & 0.3536 & -0.3536 & -0.3536 & 0.3536 & 0 & 0 \\ 0 & 0 & -0.3536 & -0.3536 & -0.5 & 0 & 0.8536 & 0.3536 \\ 0 & -0.5 & -0.3536 & -0.3536 & 0 & 0 & 0.3536 & 0.8536 \end{bmatrix}$$ **Ans**

www.e-kitabi.com

c14.qxd 6/24/08 4:59 PM Page 376

© 2009 by R.C. Hibbeler. Published by Pearson Prentice Hall, Pearson Education, Inc., Upper Saddle River, NJ. All rights reserved. This material is protected under all copyright laws as they currently exist. No portion of this material may be reproduced, in any form or by any means, without permission in writing from the publisher.

***14–12.** Determine the force in members 1 and 5. AE is constant.

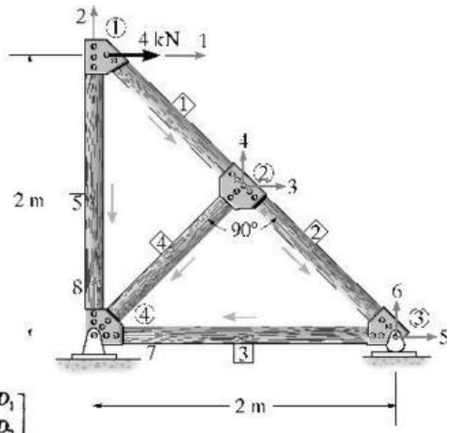

$$\mathbf{D}_k = \begin{bmatrix} 0 \\ 0 \\ 0 \end{bmatrix} \qquad \mathbf{Q}_k = \begin{bmatrix} 4 \\ 0 \\ 0 \\ 0 \\ 0 \end{bmatrix}$$

Use the structure stiffness matrix of Prob. 14–11 and applying $\mathbf{Q} = \mathbf{KD}$, we have

$$\begin{bmatrix} 4 \\ 0 \\ 0 \\ 0 \\ 0 \\ Q_6 \\ Q_7 \\ Q_8 \end{bmatrix} = AE \begin{bmatrix} 0.3536 & -0.3536 & -0.3536 & 0.3536 & 0 & 0 & 0 & 0 \\ -0.3536 & 0.8536 & 0.3536 & -0.3536 & 0 & 0 & 0 & -0.5 \\ -0.3536 & 0.3536 & 1.0607 & -0.3536 & -0.3536 & 0.3536 & -0.3536 & -0.3536 \\ 0.3536 & -0.3536 & -0.3536 & 1.0607 & 0.3536 & -0.3536 & -0.3536 & -0.3536 \\ 0 & 0 & -0.3536 & 0.3536 & 0.8536 & -0.3536 & -0.5 & 0 \\ 0 & 0 & 0.3536 & -0.3536 & -0.3536 & 0.3536 & 0 & 0 \\ 0 & 0 & -0.3536 & -0.3536 & -0.5 & 0 & 0.8536 & 0.3536 \\ 0 & -0.5 & -0.3536 & -0.3536 & 0 & 0 & 0.3536 & 0.8536 \end{bmatrix} \begin{bmatrix} D_1 \\ D_2 \\ D_3 \\ D_4 \\ D_5 \\ 0 \\ 0 \\ 0 \end{bmatrix}$$

Partition matrix

$$\begin{bmatrix} 4 \\ 0 \\ 0 \\ 0 \\ 0 \end{bmatrix} = AE \begin{bmatrix} 0.3536 & -0.3536 & -0.3536 & 0.3536 & 0 \\ -0.3536 & 0.8536 & 0.3536 & -0.3536 & 0 \\ -0.3536 & 0.3536 & 1.0607 & -0.3536 & -0.3536 \\ 0.3536 & -0.3536 & -0.3536 & 1.0607 & 0.3536 \\ 0 & 0 & -0.3536 & 0.3536 & 0.8536 \end{bmatrix} \begin{bmatrix} D_1 \\ D_2 \\ D_3 \\ D_4 \\ D_5 \end{bmatrix} + \begin{bmatrix} 0 \\ 0 \\ 0 \\ 0 \\ 0 \end{bmatrix}$$

$$4 = AE(0.3536D_1 - 0.3536D_2 - 0.3536D_3 + 0.3536D_4) \qquad (1)$$

$$0 = AE(-0.3536D_1 + 0.8536D_2 + 0.3536D_3 - 0.3536D_4) \qquad (2)$$

$$0 = AE(-0.3536D_1 + 0.3536D_2 + 1.0607D_3 - 0.3536D_4 - 0.3536D_5) \qquad (3)$$

$$0 = AE(0.3536D_1 - 0.3536D_2 - 0.3536D_3 + 1.0607D_4 + 0.3536D_5) \qquad (4)$$

$$0 = AE(-0.3536D_3 + 0.3536D_4 + 0.8536D_5) \qquad (5)$$

Solving the above equations yields:

$$D_1 = \frac{38.624}{AE}, \quad D_2 = \frac{8.00}{AE}, \quad D_3 = \frac{9.656}{AE}, \quad D_4 = \frac{-9.656}{AE}, \quad D_5 = \frac{8.00}{AE}$$

For member 1

$$\lambda_x = 0.7071, \quad \lambda_y = -0.7071, \quad L = 1.414 \text{ m}$$

$$q_1 = \frac{AE}{1.414}[-0.7071 \quad 0.7071 \quad 0.7071 \quad -0.7071] \frac{1}{AE} \begin{bmatrix} 38.624 \\ 8.000 \\ 9.656 \\ -9.656 \end{bmatrix}$$

$$= -5.66 \text{ kN} = 5.66 \text{ kN (C)} \qquad \textbf{Ans}$$

For member 5

$$\lambda_x = 0 \quad \lambda_y = -1 \quad L = 2 \text{ m}$$

$$q_5 = \frac{AE}{2}[0 \quad 1 \quad 0 \quad -1] \frac{1}{AE} \begin{bmatrix} 38.624 \\ 8.00 \\ 0 \\ 0 \end{bmatrix}$$

$$= 4.00 \text{ kN (T)} \qquad \textbf{Ans}$$

www.e-kitabi.com

© 2009 by R.C. Hibbeler. Published by Pearson Prentice Hall, Pearson Education, Inc., Upper Saddle River, NJ. All rights reserved. This material is protected under all copyright laws as they currently exist. No portion of this material may be reproduced, in any form or by any means, without permission in writing from the publisher.

14–13. Determine the stiffness matrix **K** for the truss. Take $A = 0.75\ \text{in}^2$, $E = 29(10^3)$ ksi.

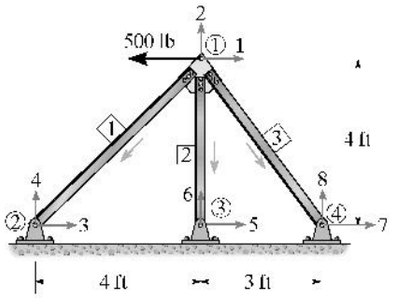

Member 1 : $\lambda_x = \dfrac{0-4}{\sqrt{32}} = -0.7071 \qquad \lambda_y = \dfrac{0-4}{\sqrt{32}} = -0.7071$

$$\mathbf{k}_1 = AE\begin{bmatrix} 0.08839 & 0.08839 & -0.08839 & -0.08839 \\ 0.08839 & 0.08839 & -0.08839 & -0.08839 \\ -0.08839 & -0.08839 & 0.08839 & 0.08839 \\ -0.08839 & -0.08839 & 0.08839 & 0.08839 \end{bmatrix}$$

Member 2 : $\lambda_x = \dfrac{4-4}{4} = 0 \qquad \lambda_y = \dfrac{0-4}{4} = -1$

$$\mathbf{k}_2 = AE\begin{bmatrix} 0 & 0 & 0 & 0 \\ 0 & 0.25 & 0 & -0.25 \\ 0 & 0 & 0 & 0 \\ 0 & -0.25 & 0 & 0.25 \end{bmatrix}$$

Member 3 : $\lambda_x = \dfrac{7-4}{5} = 0.6 \qquad \lambda_y = \dfrac{0-4}{5} = -0.8$

$$\mathbf{k}_3 = AE\begin{bmatrix} 0.072 & -0.096 & -0.072 & 0.096 \\ -0.096 & 0.128 & 0.096 & -0.128 \\ -0.072 & 0.096 & 0.072 & -0.096 \\ 0.096 & -0.128 & -0.096 & 0.128 \end{bmatrix}$$

Structure stiffness matrix

$$\mathbf{K} = \mathbf{k}_1 + \mathbf{k}_2 + \mathbf{k}_3$$

$$\mathbf{K} = AE\begin{bmatrix} 0.16039 & -0.00761 & -0.08839 & -0.08839 & 0 & 0 & -0.072 & 0.096 \\ -0.00761 & 0.46639 & -0.08839 & -0.08839 & 0 & -0.25 & 0.096 & -0.128 \\ -0.08839 & -0.08839 & 0.08839 & 0.08839 & 0 & 0 & 0 & 0 \\ -0.08839 & -0.08839 & 0.08839 & 0.08839 & 0 & 0 & 0 & 0 \\ 0 & 0 & 0 & 0 & 0 & 0 & 0 & 0 \\ 0 & -0.25 & 0 & 0 & 0 & 0.25 & 0 & 0 \\ -0.072 & 0.096 & 0 & 0 & 0 & 0 & 0.072 & -0.096 \\ 0.096 & -0.128 & 0 & 0 & 0 & 0 & -0.096 & 0.128 \end{bmatrix}$$

Ans

www.e-kitabi.com

c14.qxd 6/24/08 4:59 PM Page 378

© 2009 by R.C. Hibbeler. Published by Pearson Prentice Hall, Pearson Education, Inc., Upper Saddle River, NJ. All rights reserved. This material is protected under all copyright laws as they currently exist. No portion of this material may be reproduced, in any form or by any means, without permission in writing from the publisher.

14–14. Determine the horizontal displacement of joint ① and the force in member 2. Take $A = 0.75\ \text{in}^2$, $E = 29(10^3)$ ksi.

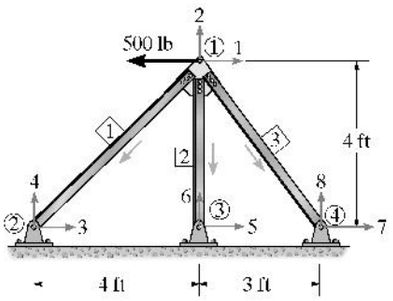

$$\mathbf{D}_k = \begin{bmatrix} 0 \\ 0 \\ 0 \\ 0 \\ 0 \\ 0 \end{bmatrix} \qquad \mathbf{Q}_k = \begin{bmatrix} -500 \\ 0 \end{bmatrix}$$

Use the structure stiffness matrix of Prob. 14–13 and applying $\mathbf{Q} = \mathbf{KD}$, we have

$$\begin{bmatrix} -500 \\ 0 \\ Q_3 \\ Q_4 \\ Q_5 \\ Q_6 \\ Q_7 \\ Q_8 \end{bmatrix} = AE \begin{bmatrix} 0.16039 & -0.00761 & -0.08839 & -0.08839 & 0 & 0 & -0.072 & 0.096 \\ -0.00761 & 0.46639 & -0.08839 & -0.08839 & 0 & -0.25 & 0.096 & -0.128 \\ -0.08839 & -0.08839 & 0.08839 & 0.08839 & 0 & 0 & 0 & 0 \\ -0.08839 & -0.08839 & 0.08839 & 0.08839 & 0 & 0 & 0 & 0 \\ 0 & 0 & 0 & 0 & 0 & 0 & 0 & 0 \\ 0 & -0.25 & 0 & 0 & 0 & 0.25 & 0 & 0 \\ -0.072 & 0.096 & 0 & 0 & 0 & 0 & 0.072 & -0.096 \\ 0.096 & -0.128 & 0 & 0 & 0 & 0 & -0.096 & 0.128 \end{bmatrix} \begin{bmatrix} D_1 \\ D_2 \\ 0 \\ 0 \\ 0 \\ 0 \\ 0 \\ 0 \end{bmatrix}$$

partition matrix

$$\begin{bmatrix} -500 \\ 0 \end{bmatrix} = AE \begin{bmatrix} 0.16039 & -0.00761 \\ -0.00761 & 0.46639 \end{bmatrix} \begin{bmatrix} D_1 \\ D_2 \end{bmatrix} + \begin{bmatrix} 0 \\ 0 \end{bmatrix}$$

$$-500 = AE(0.16039D_1 - 0.00761D_2) \qquad (1)$$

$$0 = AE(-0.00761D_1 + 0.46639D_2) \qquad (2)$$

Solving Eq. (1) and (2) yields:

$$D_1 = \frac{-3119.82}{AE} = \frac{-3119.85(12\ \text{in./ft})}{0.75\text{in}^2(29)(10^6)\ \text{lb/in}^2} = -0.00172\ \text{in.} \qquad \textbf{Ans}$$

$$D_2 = \frac{-50.917}{AE}$$

For member 2

$$\lambda_x = 0, \quad \lambda_y = -1, \quad L = 4\ \text{ft}$$

$$q_2 = \frac{AE}{4}\{0 \quad 1 \quad 0 \quad -1\} \frac{1}{AE} \begin{bmatrix} -3119.85 \\ -50.917 \\ 0 \\ 0 \end{bmatrix}$$

$$= -12.73\ \text{lb} = 12.7\ \text{lb (C)} \qquad \textbf{Ans}$$

www.e-kitabi.com

c14.qxd 6/24/08 4:59 PM Page 379

© 2009 by R.C. Hibbeler. Published by Pearson Prentice Hall, Pearson Education, Inc., Upper Saddle River, NJ. All rights reserved. This material is protected under all copyright laws as they currently exist. No portion of this material may be reproduced, in any form or by any means, without permission in writing from the publisher.

14–15. Determine the force in member 2 if its temperature is increased by 100°F. Take $A = 0.75\ \text{in}^2$, $E = 29(10^3)$ ksi, $\alpha = 6.5(10^{-6})/°\text{F}$.

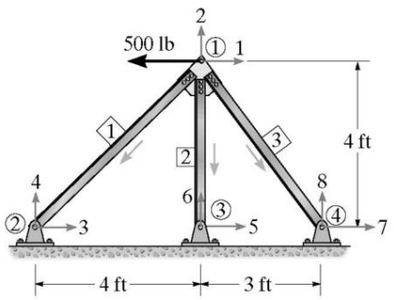

$$\begin{bmatrix}(Q_1)_0\\(Q_2)_0\\(Q_3)_0\\(Q_4)_0\end{bmatrix} = AE(6.5)(10^{-6})(+100)\begin{bmatrix}0\\-1\\0\\1\end{bmatrix} = AE\begin{bmatrix}0\\-650\\0\\650\end{bmatrix}(10^{-6})$$

Use the structure stiffness matrix of Prob. 14–13.

$$\begin{bmatrix}-500\\0\\Q_3\\Q_4\\Q_5\\Q_6\\Q_7\\Q_8\end{bmatrix} = AE\begin{bmatrix}0.16039 & -0.00761 & -0.08839 & -0.08839 & 0 & 0 & -0.072 & 0.096\\ -0.00761 & 0.46639 & -0.08839 & -0.08839 & 0 & -0.25 & 0.096 & -0.1280\\ -0.08839 & -0.08839 & 0.08839 & 0.08839 & 0 & 0 & 0 & 0\\ -0.08839 & -0.08839 & 0.08839 & 0.08839 & 0 & 0 & 0 & 0\\ 0 & 0 & 0 & 0 & 0 & 0 & 0 & 0\\ 0 & -0.25 & 0 & 0 & 0 & 0.25 & 0 & 0\\ -0.072 & 0.096 & 0 & 0 & 0 & 0 & 0.072 & -0.096\\ 0.096 & -0.1280 & 0 & 0 & 0 & 0 & -0.096 & 0.1280\end{bmatrix}\begin{bmatrix}D_1\\D_2\\0\\0\\0\\0\\0\\0\end{bmatrix}$$

$$+AE\begin{bmatrix}0\\-650\\0\\650\\0\\0\\0\\0\end{bmatrix}(10^{-6})$$

$$\frac{-500}{(0.75)(29)(10^6)} = 0.16039D_1 - 0.00761D_2 + 0$$

$$0 = -0.00761D_1 + 0.46639D_2 - 650(10^{-6})$$

Solving yields

$$D_1 = -77.837(10^{-6})\ \text{ft}$$

$$D_2 = 1392.427(10^{-6})\ \text{ft}$$

For member 2

$$\lambda_x = 0, \quad \lambda_y = -1, \quad L = 4\ \text{ft}$$

$$q_2 = \frac{0.75(29)(10^6)}{4}\begin{bmatrix}0 & 1 & 0 & -1\end{bmatrix}\begin{bmatrix}-77.837\\1392.427\\0\\0\end{bmatrix}(10^{-6}) - 0.75(29)(10^6)(6.5)(10^{-6})(100)$$

$$= 7571.32 - 14\,137.5 = -6566.18\ \text{lb} = 6.57\ \text{k (C)} \qquad \textbf{Ans}$$

www.e-kitabi.com

c14.qxd 6/24/08 4:59 PM Page 380

© 2009 by R.C. Hibbeler. Published by Pearson Prentice Hall, Pearson Education, Inc., Upper Saddle River, NJ. All rights reserved. This material is protected under all copyright laws as they currently exist. No portion of this material may be reproduced, in any form or by any means, without permission in writing from the publisher.

***14–16.** Determine the reactions on the truss. AE is constant.

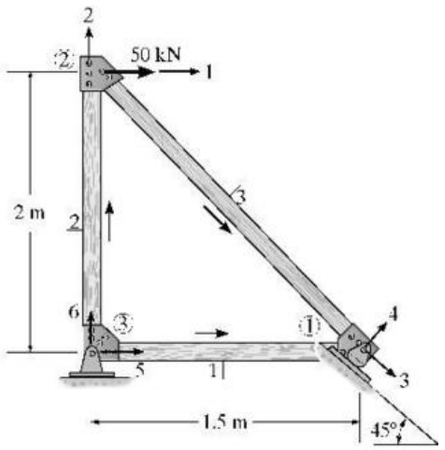

Member 1 : $\lambda_x = 1 \quad \lambda_y = 0 \quad \lambda_{x'} = 0.7071 \quad \lambda_{y'} = 0.7071 \quad L = 1.5\ \text{m}$

$$\mathbf{k}_1 = AE\begin{bmatrix} 0.6667 & 0 & -0.47140 & -0.47140 \\ 0 & 0 & 0 & 0 \\ -0.47140 & 0 & 0.3333 & 0.3333 \\ -0.47140 & 0 & 0.3333 & 0.3333 \end{bmatrix}$$

Member 2 : $\lambda_x = 0 \quad \lambda_y = 1 \quad L = 2\ \text{m}$

$$\mathbf{k}_2 = AE\begin{bmatrix} 0 & 0 & 0 & 0 \\ 0 & 0.5 & 0 & -0.5 \\ 0 & 0 & 0 & 0 \\ 0 & -0.5 & 0 & 0.5 \end{bmatrix}$$

Member 3 : $\lambda_x = 0.6 \quad \lambda_y = -0.8 \quad \lambda_{x'} = 0.9899, \quad \lambda_{y'} = -0.14142$

$$\mathbf{k}_3 = AE\begin{bmatrix} 0.144 & -0.192 & -0.23759 & 0.033941 \\ -0.192 & 0.256 & 0.31677 & -0.045255 \\ -0.23759 & 0.31678 & 0.39200 & -0.05600 \\ 0.033941 & -0.045255 & -0.05600 & 0.008000 \end{bmatrix}$$

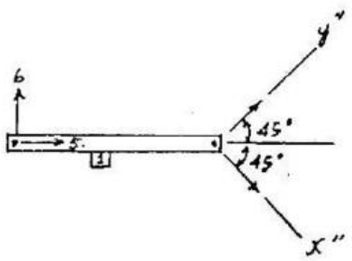

Structure stiffness matrix

$$\mathbf{K} = \mathbf{k}_1 + \mathbf{k}_2 + \mathbf{k}_3$$

$$\mathbf{K} = AE\begin{bmatrix} 0.144 & -0.192 & -0.23759 & 0.033941 & 0 & 0 \\ -0.192 & 0.756 & 0.31678 & -0.045255 & 0 & -0.5 \\ -0.23759 & 0.31678 & 0.72533 & 0.27733 & -0.4714 & 0 \\ 0.033941 & -0.045255 & 0.27733 & 0.34133 & -0.4714 & 0 \\ 0 & 0 & -0.47140 & -0.47140 & 0.66667 & 0 \\ 0 & -0.5 & 0 & 0 & 0 & 0.5 \end{bmatrix}$$

$$\begin{bmatrix} 50 \\ 0 \\ 0 \\ Q_4 \\ Q_5 \\ Q_6 \end{bmatrix} = AE\begin{bmatrix} 0.144 & -0.192 & -0.23759 & 0.03394 & 0 & 0 \\ -0.192 & 0.756 & 0.31678 & -0.045255 & 0 & -0.5 \\ -0.23759 & 0.31678 & 0.72533 & 0.27733 & -0.47140 & 0 \\ 0.03394 & -0.045255 & 0.27733 & 0.34133 & -0.47140 & 0 \\ 0 & 0 & -0.47140 & -0.47140 & 0.6667 & 0 \\ 0 & -0.5 & 0 & 0 & 0 & 0.5 \end{bmatrix}\begin{bmatrix} D_1 \\ D_2 \\ D_3 \\ 0 \\ 0 \\ 0 \end{bmatrix}$$

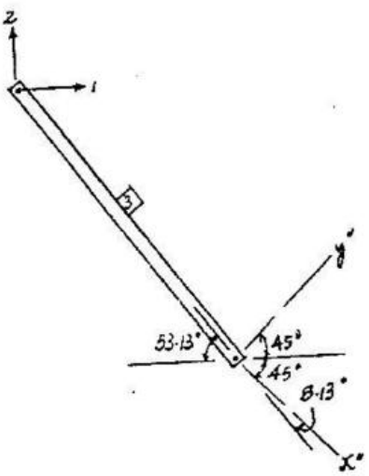

$$\frac{50}{AE} = 0.144D_1 - 0.192D_2 - 0.23759D_3$$

$$0 = -0.192D_1 + 0.756D_2 + 0.31678D_3$$

$$0 = -0.23759D_1 + 0.31678D_2 + 0.72533D_3$$

Solving these equations yields :

$$D_1 = \frac{933.33}{AE}$$

$$D_2 = \frac{133.33}{AE}$$

$$D_3 = \frac{247.49}{AE}$$

$$Q_1 = 0.033941AE\left(\frac{933.33}{AE}\right) - 0.045255AE\left(\frac{133.33}{AE}\right) + 0.27733AE\left(\frac{247.49}{AE}\right)$$

$$= 94.3\ \text{kN} \qquad \text{Ans}$$

$$Q_5 = -0.47140AE\left(\frac{247.49}{AE}\right) = -117\ \text{kN} \qquad \text{Ans}$$

$$Q_4 = -0.5AE\left(\frac{133.33}{AE}\right) = -66.7\ \text{kN} \qquad \text{Ans}$$

www.e-kitabi.com

c15.qxd 6/24/08 5:00 PM Page 381

© 2009 by R.C. Hibbeler. Published by Pearson Prentice Hall, Pearson Education, Inc., Upper Saddle River, NJ. All rights reserved. This material is protected under all copyright laws as they currently exist. No portion of this material may be reproduced, in any form or by any means, without permission in writing from the publisher.

15–1. Determine the reactions at the supports. Assume ② is a roller. EI is constant.

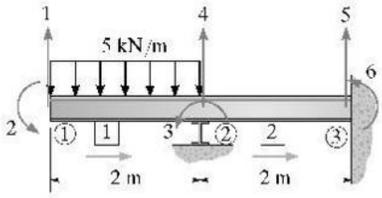

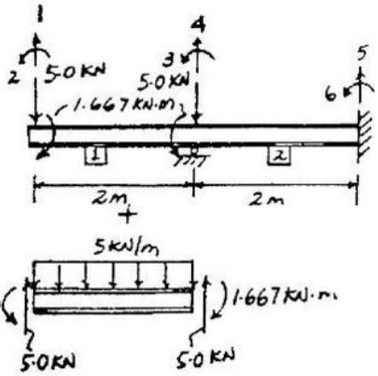

Member 1 :

$$\mathbf{k}_1 = EI\begin{bmatrix} 1.5 & 1.5 & -1.5 & 1.5 \\ 1.5 & 2 & -1.5 & 1 \\ -1.5 & -1.5 & 1.5 & -1.5 \\ 1.5 & 1 & -1.5 & 2 \end{bmatrix}$$

Member 2 :

$$\mathbf{k}_2 = EI\begin{bmatrix} 1.5 & 1.5 & -1.5 & 1.5 \\ 1.5 & 2 & -1.5 & 1 \\ -1.5 & -1.5 & 1.5 & -1.5 \\ 1.5 & 1 & -1.5 & 2 \end{bmatrix}$$

$$\begin{bmatrix} -5 \\ -1.667 \\ 1.667 \\ Q_4 - 5 \\ Q_5 \\ Q_6 \end{bmatrix} = EI\begin{bmatrix} 1.5 & 1.5 & 1.5 & -1.5 & 0 & 0 \\ 1.5 & 2 & 1 & -1.5 & 0 & 0 \\ 1.5 & 1 & 4 & 0 & -1.5 & 1 \\ -1.5 & -1.5 & 0 & 3 & -1.5 & 1.5 \\ 0 & 0 & -1.5 & -1.5 & 1.5 & -1.5 \\ 0 & 0 & 1 & 1.5 & -1.5 & 2 \end{bmatrix}\begin{bmatrix} D_1 \\ D_2 \\ D_3 \\ 0 \\ 0 \\ 0 \end{bmatrix}$$

$$-5 = 1.5D_1 + 1.5D_2 + 1.5D_3$$

$$-1.667 = 1.5D_1 + 2D_2 + 1D_3$$

$$1.667 = 1.5D_1 + 1D_2 + 4D_3$$

Solving;

$$D_1 = \frac{-20}{EI}$$

$$D_2 = \frac{11.67}{EI}$$

$$D_3 = \frac{5.0}{EI}$$

$$Q_4 - 5 = -1.5EI\left(\frac{-20.0}{EI}\right) - 1.5EI\left(\frac{11.67}{EI}\right) + 0 = 17.5 \text{ kN} \qquad \textbf{Ans}$$

$$Q_5 = 0 + 0 - 1.5EI\left(\frac{5.0}{EI}\right) = -7.50 \text{ kN} \qquad \textbf{Ans}$$

$$Q_6 = 0 + 0 + 1EI\left(\frac{5.0}{EI}\right) = 5.00 \text{ kN}\cdot\text{m} \qquad \textbf{Ans}$$

www.e-kitabi.com

c15.qxd 6/24/08 5:01 PM Page 382

© 2009 by R.C. Hibbeler. Published by Pearson Prentice Hall, Pearson Education, Inc., Upper Saddle River, NJ. All rights reserved. This material is protected under all copyright laws as they currently exist. No portion of this material may be reproduced, in any form or by any means, without permission in writing from the publisher.

15–2. Determine the internal moment in the beam at ① and ②. Assume ② is a roller and ③ is a pin. EI is constant.

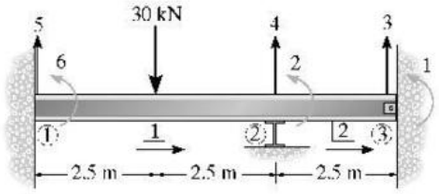

Member 1

$$\mathbf{k}_1 = EI\begin{bmatrix} 0.096 & 0.24 & -0.096 & 0.24 \\ 0.24 & 0.80 & -0.24 & 0.40 \\ -0.096 & -0.24 & 0.096 & -0.24 \\ 0.24 & 0.40 & -0.24 & 0.80 \end{bmatrix}$$

Member 2

$$\mathbf{k}_2 = EI\begin{bmatrix} 0.768 & 0.96 & -0.768 & 0.96 \\ 0.96 & 1.60 & -0.96 & 0.80 \\ -0.768 & -0.96 & 0.768 & -0.96 \\ 0.96 & 0.80 & -0.96 & 1.60 \end{bmatrix}$$

$$\mathbf{K} = EI\begin{bmatrix} 1.60 & 0.80 & -0.96 & 0.960 & 0 & 0 \\ 0.80 & 2.40 & -0.96 & 0.72 & 0.24 & 0.40 \\ -0.96 & -0.96 & 0.768 & -0.768 & 0 & 0 \\ 0.96 & 0.72 & -0.768 & 0.864 & -0.096 & -0.24 \\ 0 & 0.24 & 0 & -0.096 & 0.096 & 0.24 \\ 0 & 0.40 & 0 & -0.240 & 0.24 & 0.80 \end{bmatrix}$$

$$\mathbf{D}_k = \begin{bmatrix} 0 \\ 0 \\ 0 \\ 0 \end{bmatrix} \qquad \mathbf{Q}_k = \begin{bmatrix} 0 \\ 18.75 \end{bmatrix}$$

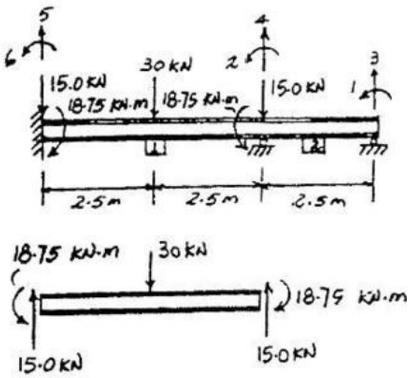

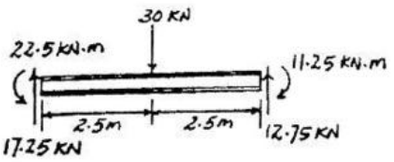

Use $\mathbf{Q} = \mathbf{KD}$

$$\begin{bmatrix} 0 \\ 18.75 \\ Q_3 \\ Q_4 - 15.0 \\ Q_5 - 15.0 \\ Q_6 - 18.75 \end{bmatrix} = EI\begin{bmatrix} 1.60 & 0.80 & -0.96 & 0.960 & 0 & 0 \\ 0.80 & 2.40 & -0.960 & 0.720 & 0.240 & 0.40 \\ -0.96 & -0.96 & 0.768 & -0.768 & 0 & 0 \\ 0.96 & 0.72 & -0.768 & 0.864 & -0.096 & -0.24 \\ 0 & 0.24 & 0 & -0.096 & 0.096 & 0.24 \\ 0 & 0.40 & 0 & -0.240 & 0.24 & 0.80 \end{bmatrix}\begin{bmatrix} D_1 \\ D_2 \\ 0 \\ 0 \\ 0 \\ 0 \end{bmatrix}$$

By partition matrix

$$\begin{bmatrix} 0 \\ 18.75 \end{bmatrix} = EI\begin{bmatrix} 1.60 & 0.80 \\ 0.80 & 2.40 \end{bmatrix}\begin{bmatrix} D_1 \\ D \end{bmatrix}$$

$$0 = EI(1.60D_1 + 0.80D_2)$$

$$18.75 = EI(0.80D_1 + 2.40D_2)$$

Solving the above equations yields

$$D_1 = \frac{-4.6875}{EI}$$

$$D_2 = \frac{9.375}{EI}$$

For member 1

$$\begin{bmatrix} q_5 \\ q_6 \\ q_4 \\ q_2 \end{bmatrix} = EI\begin{bmatrix} 0.096 & 0.24 & -0.096 & 0.24 \\ 0.24 & 0.80 & -0.24 & 0.40 \\ -096 & -0.24 & 0.096 & -0.24 \\ 0.24 & 0.40 & -0.24 & 0.80 \end{bmatrix}\begin{bmatrix} 0 \\ 0 \\ 0 \\ 9.375 \end{bmatrix}\frac{1}{EI} + \begin{bmatrix} 15 \\ 18.75 \\ 15 \\ -18.75 \end{bmatrix}$$

$$q_6 = 0.40EI\left(\frac{9.375}{EI}\right) + 18.75 = 22.5 \text{ kN·m} \qquad \textbf{Ans}$$

$$q_2 = 0.80EI\left(\frac{9.375}{EI}\right) - 18.75 = -11.25 \text{ kN·m} \qquad \textbf{Ans}$$

$$q_5 = 0.24EI\left(\frac{9.375}{EI}\right) + 15.0 = 17.25 \text{ kN}$$

$$q_4 - 0.24EI\left(\frac{9.375}{EI}\right) + 15.0 = 12.75 \text{ kN}$$

Check for equilibrium

$$\zeta + \Sigma M_1 = 0; \qquad 22.5 - 30(2.5) - 11.25 + 12.75(5) = 0 \qquad \text{(Check)}$$

$$+\uparrow \Sigma F_y = 0; \qquad 17.25 - 30 + 12.75 = 0 \qquad \text{(Check)}$$

www.e-kitabi.com

c15.qxd 6/24/08 5:01 PM Page 383

© 2009 by R.C. Hibbeler. Published by Pearson Prentice Hall, Pearson Education, Inc., Upper Saddle River, NJ. All rights reserved. This material is protected under all copyright laws as they currently exist. No portion of this material may be reproduced, in any form or by any means, without permission in writing from the publisher.

15–3. Determine the reactions at the supports. EI is a constant.

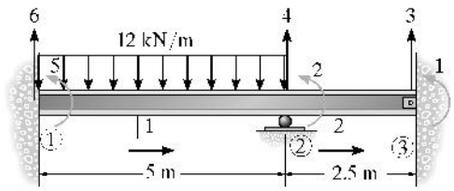

Member 1

$$\mathbf{k}_1 = EI\begin{bmatrix} 0.096 & 0.24 & -0.096 & 0.24 \\ 0.24 & 0.8 & -0.24 & 0.4 \\ -0.096 & -0.24 & 0.096 & -0.24 \\ 0.24 & 0.4 & -0.24 & 0.8 \end{bmatrix}$$

Member 2

$$\mathbf{k}_2 = EI\begin{bmatrix} 0.768 & 0.96 & -0.768 & 0.96 \\ 0.96 & 1.6 & -0.96 & 0.8 \\ -0.768 & -0.96 & 0.768 & -0.96 \\ 0.96 & 0.8 & -0.96 & 1.6 \end{bmatrix}$$

$$\begin{bmatrix} 0 \\ 25.0 \\ Q_3 \\ Q_4 - 30.0 \\ Q_5 - 25.0 \\ Q_6 - 30.0 \end{bmatrix} = EI\begin{bmatrix} 1.6 & 0.8 & -0.96 & 0.96 & 0 & 0 \\ 0.8 & 2.4 & -0.96 & 0.72 & 0.4 & 0.24 \\ -0.96 & -0.96 & 0.768 & -0.768 & 0 & 0 \\ 0.96 & 0.72 & -0.768 & 0.864 & -0.24 & -0.096 \\ 0 & 0.4 & 0 & -0.24 & 0.8 & 0.24 \\ 0 & 0.24 & 0 & -0.096 & 0.24 & 0.096 \end{bmatrix}\begin{bmatrix} D_1 \\ D_2 \\ 0 \\ 0 \\ 0 \\ 0 \end{bmatrix}$$

$$0 = 1.6D_1 + 0.8D_2$$

$$\frac{25.0}{EI} = 0.8D_1 + 2.4D_2$$

$$D_1 = \frac{-6.25}{EI}$$

$$D_2 = \frac{12.5}{EI}$$

$$Q_3 = -0.96EI\left(\frac{-6.25}{EI}\right) - 0.96EI\left(\frac{12.5}{EI}\right) = -6.00\ \text{kN} \qquad \text{Ans}$$

$$Q_4 - 30.0 = 0.96EI\left(\frac{-6.25}{EI}\right) + 0.72\left(\frac{12.5}{EI}\right)$$

$$Q_4 = 33\ \text{kN} \qquad \text{Ans}$$

$$Q_5 - 25.0 = 0 + 0.4EI\left(\frac{12.5}{EI}\right)$$

$$Q_5 = 30\ \text{kN}\cdot\text{m} \qquad \text{Ans}$$

$$Q_6 - 30.0 = 0 + 0.24EI\left(\frac{12.5}{EI}\right)$$

$$Q_6 = 33.0\ \text{kN} \qquad \text{Ans}$$

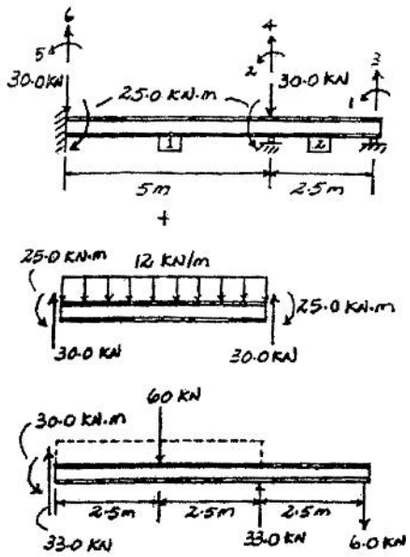

$$\zeta + \Sigma M_1 = 0: \quad 30.0 + 33.0(5) - 60.0(2.5) - 6(7.5) = 0 \qquad \text{(Check)}$$

$$+\uparrow \Sigma F_y = 0: \quad 33.0 + 33.0 - 60.0 - 6 = 0 \qquad \text{(Check)}$$

www.e-kitabi.com

© 2009 by R.C. Hibbeler. Published by Pearson Prentice Hall, Pearson Education, Inc., Upper Saddle River, NJ. All rights reserved. This material is protected under all copyright laws as they currently exist. No portion of this material may be reproduced, in any form or by any means, without permission in writing from the publisher.

***15–4.** Determine the moments at the supports. Assume ② is a roller. EI is constant.

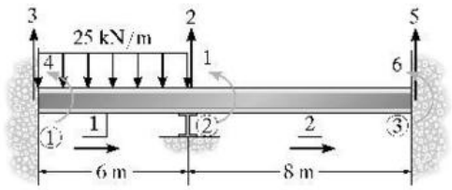

Member 1

$$\mathbf{k}_1 = EI\begin{bmatrix} 0.05556 & 0.16667 & -0.05556 & 0.16667 \\ 0.16667 & 0.66667 & -0.16667 & 0.33333 \\ -0.05556 & -0.16667 & 0.05556 & -0.16667 \\ 0.16667 & 0.33333 & -0.16667 & 0.66667 \end{bmatrix}$$

Member 2

$$\mathbf{k}_2 = EI\begin{bmatrix} 0.02344 & 0.09375 & -0.02344 & 0.09375 \\ 0.09375 & 0.50 & -0.09375 & 0.25 \\ -0.02344 & -0.09375 & 0.02344 & -0.09375 \\ 0.09375 & 0.25 & -0.09375 & 0.50 \end{bmatrix}$$

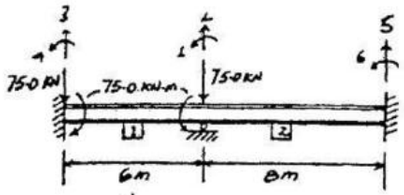

$$\mathbf{K} = EI\begin{bmatrix} 1.16667 & -0.07292 & 0.16667 & 0.33333 & -0.09375 & 0.25 \\ -0.07292 & 0.07899 & -0.05556 & -0.16667 & -0.02344 & 0.09375 \\ 0.16667 & -0.05556 & 0.05556 & 0.16667 & 0 & 0 \\ 0.33333 & -0.16667 & 0.16667 & 0.6667 & 0 & 0 \\ -0.09375 & -0.02344 & 0 & 0 & 0.02344 & -0.09375 \\ 0.25 & 0.09375 & 0 & 0 & -0.09375 & 0.5 \end{bmatrix}$$

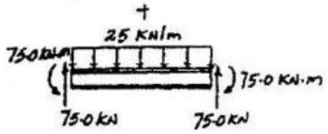

$$\mathbf{D}_k = \begin{bmatrix} 0 \\ 0 \\ 0 \\ 0 \\ 0 \end{bmatrix} \qquad \mathbf{Q}_k = [75]$$

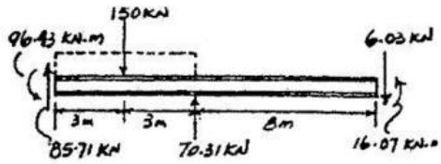

Use Eq. $\mathbf{Q} = \mathbf{KD}$

$$\begin{bmatrix} 75 \\ Q_2 - 75.0 \\ Q_3 - 75.0 \\ Q_4 - 75.0 \\ Q_5 \\ Q_6 \end{bmatrix} = EI\begin{bmatrix} 1.1667 & -0.07292 & 0.16667 & 0.33333 & -0.09375 & 0.25 \\ -0.07292 & 0.07899 & -0.05556 & -0.16667 & -0.02344 & 0.09375 \\ 0.16667 & -0.05556 & 0.05556 & 0.16667 & 0 & 0 \\ 0.33333 & -0.16667 & 0.16667 & 0.66667 & 0 & 0 \\ -0.09375 & -0.02344 & 0 & 0 & 0.02344 & -0.09375 \\ 0.25 & 0.09375 & 0 & 0 & -0.09375 & 0.5 \end{bmatrix}\begin{bmatrix} D_1 \\ 0 \\ 0 \\ 0 \\ 0 \\ 0 \end{bmatrix}$$

Partition matrix

$$75.0 = EI(1.16667)D_1$$

$$D_1 = \frac{64.286}{EI}$$

$$Q_2 - 75.0 = -0.07292EI\left(\frac{64.286}{EI}\right)$$

$$Q_2 = 70.31 \text{ kN}$$

$$Q_3 - 75.0 = 0.16667EI\left(\frac{64.286}{EI}\right)$$

$$Q_3 = 85.71 \text{ kN}$$

$$Q_4 - 75.0 = 0.33333EI\left(\frac{64.286}{EI}\right)$$

$$Q_4 = M_1 = 96.43 \text{ kN}\cdot\text{m} = 96.4 \text{ kN}\cdot\text{m} \qquad \text{Ans}$$

$$Q_5 = -0.09375EI\left(\frac{64.286}{EI}\right) = -6.03 \text{ kN} = 6.03 \text{ kN}$$

$$Q_6 = M_2 = 0.25EI\left(\frac{64.286}{EI}\right) = 16.07 \text{ kN}\cdot\text{m} = 16.1 \text{ kN}\cdot\text{m} \qquad \text{Ans}$$

Check for equilibrium

$$(+\Sigma M_2 = 0; \quad 150(3) + 16.07 + 96.43 - 85.71(6) - 6.03(8) = 0 \quad \text{(Check)}$$

$$+\uparrow \Sigma F_y = 0; \quad 85.71 + 70.31 - 6.03 - 150 = 0 \quad \text{(Check)}$$

www.e-kitabi.com

c15.qxd 6/24/08 5:01 PM Page 385

© 2009 by R.C. Hibbeler. Published by Pearson Prentice Hall, Pearson Education, Inc., Upper Saddle River, NJ. All rights reserved. This material is protected under all copyright laws as they currently exist. No portion of this material may be reproduced, in any form or by any means, without permission in writing from the publisher.

15–5. Determine the moments at ② and ③. Assume ② and ③ are rollers and ① and ④ are pins. EI is constant.

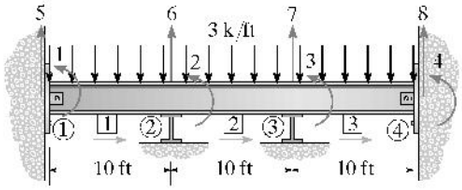

Member 1

$$\mathbf{k}_1 = EI\begin{bmatrix} 0.012 & 0.06 & -0.012 & 0.06 \\ 0.06 & 0.40 & -0.06 & 0.20 \\ -0.012 & -0.06 & 0.012 & -0.06 \\ 0.06 & 0.20 & -0.06 & 0.40 \end{bmatrix}$$

Member 2

$$\mathbf{k}_2 = EI\begin{bmatrix} 0.012 & 0.06 & -0.012 & 0.06 \\ 0.06 & 0.40 & -0.06 & 0.20 \\ -0.012 & -0.06 & 0.012 & -0.06 \\ 0.06 & 0.20 & -0.06 & 0.40 \end{bmatrix}$$

Member 3

$$\mathbf{k}_3 = EI\begin{bmatrix} 0.012 & 0.06 & -0.012 & 0.06 \\ 0.06 & 0.40 & -0.06 & 0.20 \\ -0.012 & -0.06 & 0.012 & -0.06 \\ 0.06 & 0.20 & -0.06 & 0.40 \end{bmatrix}$$

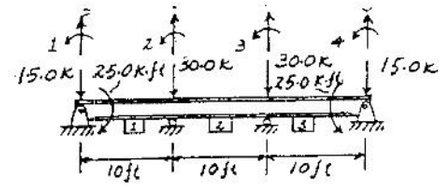

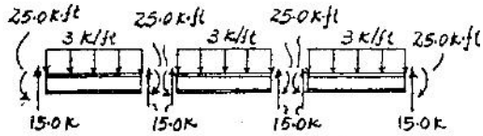

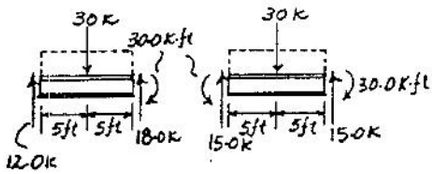

$$\mathbf{K} = EI\begin{bmatrix} 0.40 & 0.20 & 0 & 0 & 0.06 & -0.06 & 0 & 0 \\ 0.20 & 0.80 & 0.20 & 0 & 0.06 & 0 & -0.06 & 0 \\ 0 & 0.20 & 0.80 & 0.20 & 0 & 0.06 & 0 & -0.06 \\ 0 & 0 & 0.20 & 0.40 & 0 & 0 & 0.06 & -0.06 \\ 0.06 & 0.06 & 0 & 0 & 0.012 & -0.012 & 0 & 0 \\ -0.06 & 0 & 0.06 & 0 & -0.012 & 0.024 & -0.012 & 0 \\ 0 & -0.06 & 0 & 0.06 & 0 & -0.012 & 0.024 & -0.012 \\ 0 & 0 & -0.06 & -0.06 & 0 & 0 & -0.012 & 0.012 \end{bmatrix}$$

$$\mathbf{D}_k = \begin{bmatrix} 0 \\ 0 \\ 0 \\ 0 \end{bmatrix} \qquad \mathbf{Q}_k = \begin{bmatrix} -25.0 \\ 0 \\ 0 \\ 25.0 \end{bmatrix}$$

Apply $\mathbf{Q} = \mathbf{K}\mathbf{D}$.

$$\begin{bmatrix} -25.0 \\ 0 \\ 0 \\ 25.0 \\ Q_5 - 15.0 \\ Q_6 - 30.0 \\ Q_7 - 30.0 \\ Q_8 - 15.0 \end{bmatrix} = EI\begin{bmatrix} 0.40 & 0.20 & 0 & 0 & 0.06 & -0.06 & 0 & 0 \\ 0.20 & 0.80 & 0.20 & 0 & 0.06 & 0 & -0.06 & 0 \\ 0 & 0.20 & 0.80 & 0.20 & 0 & 0.06 & 0 & -0.06 \\ 0 & 0 & 0.20 & 0.40 & 0 & 0 & 0.06 & -0.06 \\ 0.06 & 0.06 & 0 & 0 & 0.012 & -0.012 & 0 & 0 \\ -0.06 & 0 & 0.06 & 0 & -0.012 & 0.024 & -0.012 & 0 \\ 0 & -0.06 & 0 & 0.06 & 0 & -0.012 & 0.024 & -0.012 \\ 0 & 0 & -0.06 & -0.06 & 0 & 0 & -0.012 & 0.012 \end{bmatrix}\begin{bmatrix} D_1 \\ D_2 \\ D_3 \\ D_4 \\ 0 \\ 0 \\ 0 \\ 0 \end{bmatrix}$$

www.e-kitabi.com

c15.qxd 6/24/08 5:01 PM Page 386

© 2009 by R.C. Hibbeler. Published by Pearson Prentice Hall, Pearson Education, Inc., Upper Saddle River, NJ. All rights reserved. This material is protected under all copyright laws as they currently exist. No portion of this material may be reproduced, in any form or by any means, without permission in writing from the publisher.

Partition matrix

$$\begin{bmatrix} -25.0 \\ 0 \\ 0 \\ 25.0 \end{bmatrix} = EI\begin{bmatrix} 0.40 & 0.20 & 0 & 0 \\ 0.20 & 0.80 & 0.20 & 0 \\ 0 & 0.20 & 0.80 & 0.20 \\ 0 & 0 & 0.20 & 0.40 \end{bmatrix}\begin{bmatrix} D_1 \\ D_2 \\ D_3 \\ D_4 \end{bmatrix} + \begin{bmatrix} 0 \\ 0 \\ 0 \\ 0 \end{bmatrix}$$

$$-25.0 = EI(0.40D_1 + 0.20D_2) \quad (1)$$

$$0 = EI(0.20D_1 + 2.80D_2 + 0.20D_3) \quad (2)$$

$$0 = EI(0.20D_2 + 0.80D_3 + 0.20D_4) \quad (3)$$

$$25.0 = EI(0.20D_3 + 0.40D_4) \quad (4)$$

Solving the above equations yields

$$D_1 = \frac{-75.00}{EI}$$

$$D_2 = \frac{25.00}{EI}$$

$$D_3 = \frac{-25.00}{EI}$$

$$D_4 = \frac{75.00}{EI}$$

For member 1

$$\begin{bmatrix} q_5 \\ q_1 \\ q_6 \\ q_2 \end{bmatrix} = EI\begin{bmatrix} 0.012 & 0.06 & -0.012 & 0.06 \\ 0.06 & 0.40 & -0.06 & 0.20 \\ -0.012 & -0.06 & 0.012 & -0.06 \\ 0.06 & 0.20 & -0.06 & 0.40 \end{bmatrix}\frac{1}{EI}\begin{bmatrix} 0 \\ -75.00 \\ 0 \\ 25.00 \end{bmatrix} + \begin{bmatrix} 15.0 \\ 25.0 \\ 15.0 \\ -25.0 \end{bmatrix}$$

$q_5 = 12.0$ k, $q_1 = 0$, $q_6 = 18.0$ k

$M_2 = q_2 = -30.0$ k·ft **Ans**

For member 2

$$\begin{bmatrix} q_6 \\ q_2 \\ q_7 \\ q_3 \end{bmatrix} = EI\begin{bmatrix} 0.012 & 0.06 & -0.012 & 0.06 \\ 0.06 & 0.40 & -0.06 & 0.20 \\ -0.012 & -0.06 & 0.012 & -0.06 \\ 0.06 & 0.20 & -0.06 & 0.40 \end{bmatrix}\frac{1}{EI}\begin{bmatrix} 0 \\ 25.00 \\ 0 \\ -25.00 \end{bmatrix} + \begin{bmatrix} 15.0 \\ 25.0 \\ 15.0 \\ -25.0 \end{bmatrix}$$

$q_6 = 15.0$ k, $q_7 = 15.0$ k,

$M_2 = q_2 = 30.0$ k·ft **Ans**

$q_3 = M_3 = -30.0$ k·ft **Ans**

Check for equilibrium

$(+\Sigma M_1 = 0;$ $18.0(10) - 30.0(5) - 30.0 = 0$ (Check)

$+\uparrow \Sigma F_y = 0;$ $12.0 + 18.0 - 30.0 = 0$ (Check)

$(+\Sigma M_2 = 0;$ $30.0 + 15.0(10) - 30.0(5) - 30.0 = 0$ (Check)

$+\uparrow \Sigma F_y = 0;$ $15.0 + 15.0 - 30.0 = 0$ (Check)

www.e-kitabi.com

© 2009 by R.C. Hibbeler. Published by Pearson Prentice Hall, Pearson Education, Inc., Upper Saddle River, NJ. All rights reserved. This material is protected under all copyright laws as they currently exist. No portion of this material may be reproduced, in any form or by any means, without permission in writing from the publisher.

15–6. Determine the reactions at the supports. Assume ② is pinned and ① and ③ are rollers. EI is constant.

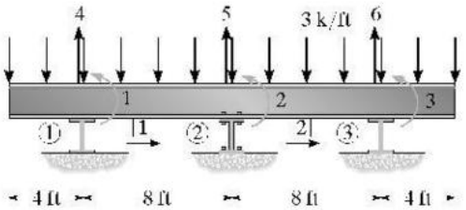

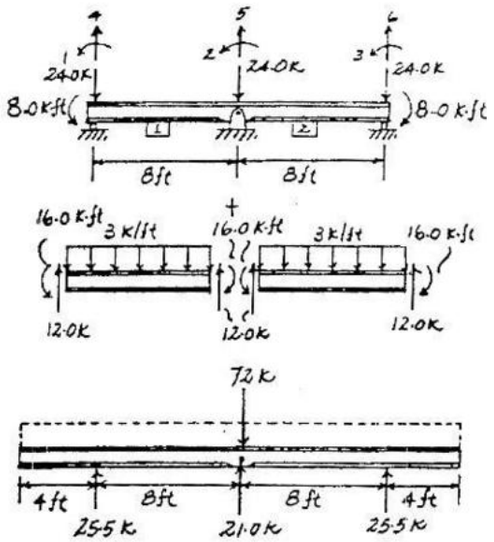

Member 1

$$\mathbf{k}_1 = \frac{EI}{8}\begin{bmatrix} 0.1875 & 0.75 & -0.1875 & 0.75 \\ 0.75 & 4 & -0.75 & 2 \\ -0.1875 & -0.75 & 0.1875 & -0.75 \\ 0.75 & 2 & -0.75 & 4 \end{bmatrix}$$

Member 2

$$\mathbf{k}_2 = \frac{EI}{8}\begin{bmatrix} 0.1875 & 0.75 & -0.1875 & 0.75 \\ 0.75 & 4 & -0.75 & 2 \\ -0.1875 & -0.75 & 0.1875 & -0.75 \\ 0.75 & 2 & -0.75 & 4 \end{bmatrix}$$

$$\mathbf{Q} = \mathbf{KD}$$

$$\begin{bmatrix} 8.0 \\ 0 \\ -8.0 \\ Q_4 - 24.0 \\ Q_5 - 24.0 \\ Q_6 - 24.0 \end{bmatrix} = \frac{EI}{8}\begin{bmatrix} 4 & 2 & 0 & 0.75 & -0.75 & 0 \\ 2 & 8 & 2 & 0.75 & 0 & -0.75 \\ 0 & 2 & 4 & 0 & 0.75 & -0.75 \\ 0.75 & 0.75 & 0 & 0.1875 & -0.1875 & 0 \\ -0.75 & 0 & 0.75 & -0.1875 & 0.375 & -0.1875 \\ 0 & -0.75 & -0.75 & 0 & -0.1875 & 0.1875 \end{bmatrix}\begin{bmatrix} D_1 \\ D_2 \\ D_3 \\ 0 \\ 0 \\ 0 \end{bmatrix}$$

$$8.0 = \frac{EI}{8}[4D_1 + 2D_2]$$

$$0 = \frac{EI}{8}[2D_1 + 8D_2 + 2D_3]$$

$$-8.0 = \frac{EI}{8}[2D_2 + 4D_3]$$

Solving:

$$D_1 = \frac{16.0}{EI}, \qquad D_2 = 0, \qquad D_3 = -\frac{16.0}{EI}$$

$$Q_4 - 24.0 = \frac{EI}{8}(0.75)\left(\frac{16.0}{EI}\right) + 0 + 0$$

$$Q_4 = 25.5 \text{ k} \qquad \text{Ans}$$

$$Q_5 - 24.0 = \frac{EI}{8}(-0.75)\left(\frac{16.0}{EI}\right) + 0 + \frac{EI}{8}(0.75)\left(-\frac{16.0}{EI}\right)$$

$$Q_5 = 21.0 \text{ k} \qquad \text{Ans}$$

$$Q_6 - 24.0 = 0 + 0 + \frac{EI}{8}(-0.75)\left(\frac{-16.0}{EI}\right)$$

$$Q_6 = 25.5 \text{ k} \qquad \text{Ans}$$

$$\zeta + \Sigma M_2 = 0; \quad 25.5(8) - 25.5(8) = 0 \quad \text{(Check)}$$

$$+\uparrow \Sigma F_y = 0; \quad 25.5 + 21.0 + 25.5 - 72 = 0 \quad \text{(Check)}$$

www.e-kitabi.com

c15.qxd 6/24/08 5:01 PM Page 388

© 2009 by R.C. Hibbeler. Published by Pearson Prentice Hall, Pearson Education, Inc., Upper Saddle River, NJ. All rights reserved. This material is protected under all copyright laws as they currently exist. No portion of this material may be reproduced, in any form or by any means, without permission in writing from the publisher.

15–7. Determine the reactions at the supports. EI is constant.

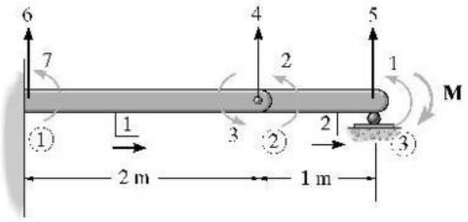

Member 1

$$\mathbf{k}_1 = EI\begin{bmatrix} 1.5 & 1.5 & -1.5 & 1.5 \\ 1.5 & 2 & -1.5 & 1 \\ -1.5 & -1.5 & 1.5 & -1.5 \\ 1.5 & 1 & -1.5 & 2 \end{bmatrix}$$

Member 2

$$\mathbf{k}_2 = EI\begin{bmatrix} 12 & 6 & -12 & 6 \\ 6 & 4 & -6 & 2 \\ -12 & -6 & 12 & -6 \\ 6 & 2 & -6 & 4 \end{bmatrix}$$

$$\mathbf{Q} = \mathbf{KD}$$

$$\begin{bmatrix} -M \\ 0 \\ 0 \\ 0 \\ Q_5 \\ Q_6 \\ Q_7 \end{bmatrix} = EI\begin{bmatrix} 4 & 2 & 0 & 6 & -6 & 0 & 0 \\ 2 & 4 & 0 & 6 & -6 & 0 & 0 \\ 0 & 0 & 2 & -1.5 & 0 & 1.5 & 1 \\ 6 & 6 & -1.5 & 13.5 & -12 & -1.5 & -1.5 \\ -6 & -6 & 0 & -12 & 12 & 0 & 0 \\ 0 & 0 & 1.5 & -1.5 & 0 & 1.5 & 1.5 \\ 0 & 0 & 1 & -1.5 & 0 & 1.5 & 2 \end{bmatrix}\begin{bmatrix} D_1 \\ D_2 \\ D_3 \\ D_4 \\ 0 \\ 0 \\ 0 \end{bmatrix}$$

$$\frac{-M}{EI} = 4D_1 + 2D_2 + 6D_4$$

$$0 = 2D_1 + 4D_2 + 6D_4$$

$$0 = 2D_3 - 1.5D_4$$

$$0 = 6D_1 + 6D_2 - 1.5D_3 + 13.5D_4$$

Solving the above equations yields

$$D_1 = \frac{-3M}{EI}$$

$$D_2 = \frac{-2.5M}{EI}$$

$$D_3 = \frac{2M}{EI}$$

$$D_4 = \frac{2.667M}{EI}$$

$$Q_5 = -6EI\left(\frac{-3M}{EI}\right) - 6EI\left(\frac{-2.5M}{EI}\right) + 0 - 12EI\left(\frac{2.667M}{EI}\right)$$

$$Q_5 = M \qquad \text{Ans}$$

$$Q_6 = 0 + 0 + 1.5EI\left(\frac{2M}{EI}\right) - 1.5EI\left(\frac{2.667M}{EI}\right)$$

$$= -M \qquad \text{Ans}$$

$$Q_7 = 0 + 0 + 1EI\left(\frac{2M}{EI}\right) - 1.5EI\left(\frac{2.667M}{EI}\right)$$

$$= -2M \qquad \text{Ans}$$

www.e-kitabi.com

c15.qxd 6/24/08 5:01 PM Page 389

© 2009 by R.C. Hibbeler. Published by Pearson Prentice Hall, Pearson Education, Inc., Upper Saddle River, NJ. All rights reserved. This material is protected under all copyright laws as they currently exist. No portion of this material may be reproduced, in any form or by any means, without permission in writing from the publisher.

***15–8.** Determine the moments at ① and ③. Assume ② is a roller and ① and ③ are fixed. EI is constant.

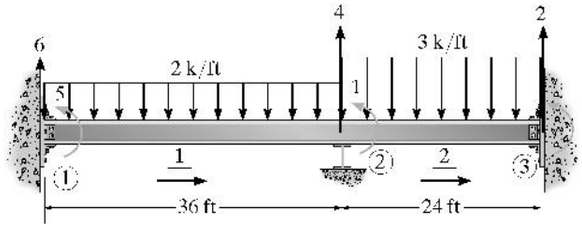

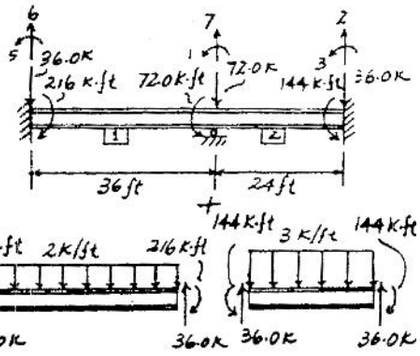

Member 1

$$\mathbf{k}_1 = EI\begin{bmatrix} \frac{12}{(36)^3} & \frac{6}{(36)^2} & \frac{-12}{(36)^3} & \frac{6}{(36)^2} \\ \frac{6}{(36)^2} & \frac{4}{36} & \frac{-6}{(36)^2} & \frac{2}{36} \\ \frac{-12}{(36)^3} & \frac{-6}{(36)^2} & \frac{12}{(36)^3} & \frac{-6}{(36)^2} \\ \frac{6}{(36)^2} & \frac{2}{36} & \frac{-6}{(36)^2} & \frac{4}{36} \end{bmatrix}$$

Member 2

$$\mathbf{k}_2 = EI\begin{bmatrix} \frac{12}{(24)^3} & \frac{6}{(24)^2} & \frac{-12}{(24)^3} & \frac{-6}{(24)^2} \\ \frac{6}{(24)^2} & \frac{4}{24} & \frac{-6}{(24)^2} & \frac{2}{24} \\ \frac{-12}{(24)^3} & \frac{-6}{(24)^2} & \frac{12}{(24)^3} & \frac{-6}{(24)^2} \\ \frac{6}{(24)^2} & \frac{2}{24} & \frac{-6}{(24)^2} & \frac{4}{24} \end{bmatrix}$$

$$\begin{bmatrix} 72.0 \\ Q_2 - 36.0 \\ Q_3 + 144 \\ Q_4 - 72.0 \\ Q_5 - 216 \\ Q_6 - 36.0 \end{bmatrix} = EI\begin{bmatrix} \frac{5}{18} & \frac{-6}{(24)^2} & \frac{2}{24} & \frac{5}{864} & \frac{2}{36} & \frac{6}{(36)^2} \\ \frac{-6}{(24)^2} & \frac{12}{(24)^3} & \frac{-6}{(24)^2} & \frac{-12}{(24)^3} & 0 & 0 \\ \frac{2}{24} & \frac{-6}{(24)^2} & \frac{4}{24} & \frac{6}{(24)^2} & 0 & 0 \\ \frac{5}{864} & \frac{-12}{(24)^3} & \frac{6}{(24)^2} & \frac{35}{31,104} & \frac{-6}{(36)^2} & \frac{-12}{(36)^3} \\ \frac{2}{36} & 0 & 0 & \frac{-6}{(36)^2} & \frac{4}{36} & \frac{6}{(36)^2} \\ \frac{6}{(36)^2} & 0 & 0 & \frac{-12}{(36)^3} & \frac{6}{(36)^2} & \frac{12}{(36)^3} \end{bmatrix}\begin{bmatrix} D_1 \\ 0 \\ 0 \\ 0 \\ 0 \\ 0 \end{bmatrix}$$

$$72.0 = \frac{5}{18}EI(D_1)$$

$$D_1 = \frac{259.2}{EI}$$

$$Q_3 + 144 = \frac{2EI}{24}\left(\frac{259.2}{EI}\right)$$

$$Q_3 = -122.4 \text{ k-ft} = 122 \text{ k-ft} \qquad \textbf{Ans}$$

$$Q_5 - 216 = \frac{2EI}{36}\left(\frac{259.2}{EI}\right)$$

$$Q_5 = 230.4 \text{ k-ft} = 230 \text{ k-ft} \qquad \textbf{Ans}$$

www.e-kitabi.com

© 2009 by R.C. Hibbeler. Published by Pearson Prentice Hall, Pearson Education, Inc., Upper Saddle River, NJ. All rights reserved. This material is protected under all copyright laws as they currently exist. No portion of this material may be reproduced, in any form or by any means, without permission in writing from the publisher.

15–9. Determine the moments at ① and ③ if the support ② settles 0.1 ft. Assume ② is a roller and ① and ③ are fixed. $EI = 9500\ \text{k} \cdot \text{ft}^2$.

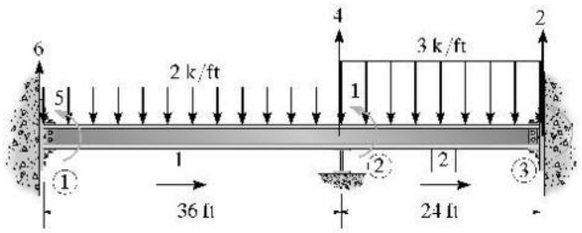

Member 1

$$\mathbf{k}_1 = EI\begin{bmatrix} \frac{12}{(36)^3} & \frac{6}{(36)^2} & \frac{-12}{(36)^3} & \frac{6}{(36)^2} \\ \frac{6}{(36)^2} & \frac{4}{36} & \frac{-6}{(36)^2} & \frac{2}{36} \\ \frac{-12}{(36)^3} & \frac{-6}{(36)^2} & \frac{12}{(36)^3} & \frac{-6}{(36)^2} \\ \frac{6}{(36)^2} & \frac{2}{36} & \frac{-6}{(36)^2} & \frac{4}{36} \end{bmatrix}$$

Member 1

$$\mathbf{k}_2 = EI\begin{bmatrix} \frac{12}{(24)^3} & \frac{6}{(24)^2} & \frac{-12}{(24)^3} & \frac{6}{(24)^2} \\ \frac{6}{(24)^2} & \frac{4}{24} & \frac{-6}{(24)^2} & \frac{2}{24} \\ \frac{-12}{(24)^3} & \frac{-6}{(24)^2} & \frac{12}{(24)^3} & \frac{-6}{(24)^2} \\ \frac{6}{(24)^2} & \frac{2}{24} & \frac{-6}{(24)^2} & \frac{4}{24} \end{bmatrix}$$

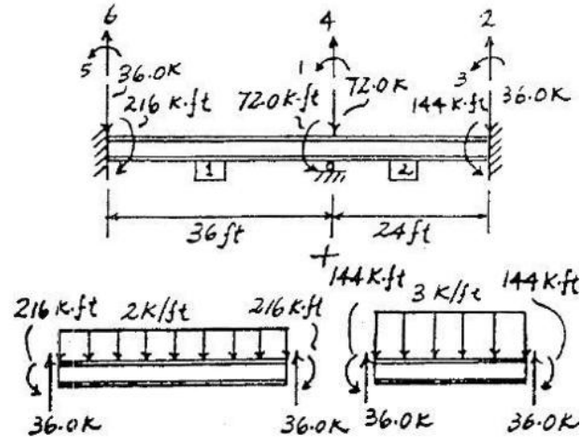

$$\begin{bmatrix} 72.0 \\ Q_2 - 36.0 \\ Q_3 + 144 \\ Q_4 - 72.0 \\ Q_5 - 216 \\ Q_6 - 36.0 \end{bmatrix} = EI\begin{bmatrix} \frac{5}{18} & \frac{-6}{(24)^2} & \frac{2}{24} & \frac{5}{864} & \frac{2}{36} & \frac{6}{(36)^2} \\ \frac{-6}{(24)^2} & \frac{12}{(24)^3} & \frac{-6}{(24)^2} & \frac{-12}{(24)^3} & 0 & 0 \\ \frac{2}{24} & \frac{-6}{(24)^2} & \frac{4}{24} & \frac{6}{(24)^2} & 0 & 0 \\ \frac{5}{864} & \frac{-12}{(24)^3} & \frac{6}{(24)^2} & \frac{35}{31\,104} & \frac{-6}{(36)^2} & \frac{-12}{(36)^3} \\ \frac{2}{36} & 0 & 0 & \frac{-6}{(36)^2} & \frac{4}{36} & \frac{6}{(36)^2} \\ \frac{6}{(36)^2} & 0 & 0 & \frac{-12}{(36)^3} & \frac{6}{(36)^2} & \frac{12}{(36)^3} \end{bmatrix}\begin{bmatrix} D_1 \\ 0 \\ 0 \\ -0.1 \\ 0 \\ 0 \end{bmatrix}$$

$$72.0 = 9500\left[\frac{5}{18}D_1 + \frac{5}{864}(-0.1)\right]$$

$$D_1 = 0.029368\ \text{rad}$$

$$Q_3 + 144 = 9500\left[\frac{2}{24}(0.029368) + \frac{6}{(24)^2}(-0.1)\right]$$

$$Q_3 = -130.65\ \text{k·ft} = 131\ \text{k·ft} \qquad \textbf{Ans}$$

$$Q_5 + 216 = 9500\left[\frac{2}{36}(0.029368) + \frac{6}{(36)^2}(-0.1)\right]$$

$$Q_5 = 235.90\ \text{k·ft} = 236\ \text{k·ft} \qquad \textbf{Ans}$$

www.e-kitabi.com

c15.qxd 6/24/08 5:01 PM Page 391

© 2009 by R.C. Hibbeler. Published by Pearson Prentice Hall, Pearson Education, Inc., Upper Saddle River, NJ. All rights reserved. This material is protected under all copyright laws as they currently exist. No portion of this material may be reproduced, in any form or by any means, without permission in writing from the publisher.

15–10. Determine the reactions at the supports. *EI* is constant.

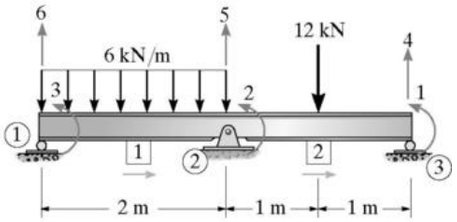

Member 1

$$\mathbf{k}_1 = EI\begin{bmatrix} 1.5 & 1.5 & -1.5 & 1.5 \\ 1.5 & 2 & -1.5 & 1 \\ -1.5 & -1.5 & 1.5 & -1.5 \\ 1.5 & 1 & -1.5 & 2 \end{bmatrix}$$

Member 1

$$\mathbf{k}_2 = EI\begin{bmatrix} 1.5 & 1.5 & -1.5 & 1.5 \\ 1.5 & 2 & -1.5 & 1 \\ -1.5 & -1.5 & 1.5 & -1.5 \\ 1.5 & 1 & -1.5 & 2 \end{bmatrix}$$

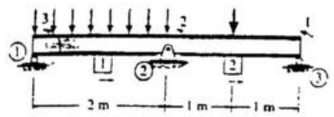

$$\begin{bmatrix} 3 \\ -1 \\ -2 \\ Q_4 - 6 \\ Q_5 - 12 \\ Q_6 - 6 \end{bmatrix} = EI\begin{bmatrix} 2 & 1 & 0 & -1.5 & 1.5 & 0 \\ 1 & 4 & 1 & -1.5 & 0 & 1.5 \\ 0 & 1 & 2 & 0 & -1.5 & 1.5 \\ -1.5 & -1.5 & 0 & 1.5 & -1.5 & 0 \\ 1.5 & 0 & -1.5 & -1.5 & 3 & -1.5 \\ 0 & 1.5 & 1.5 & 0 & -1.5 & 1.5 \end{bmatrix}\begin{bmatrix} D_1 \\ D_2 \\ D_3 \\ 0 \\ 0 \\ 0 \end{bmatrix}$$

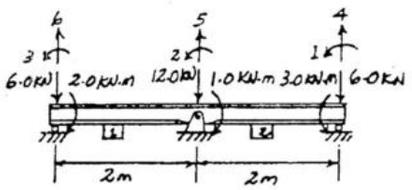

$$\frac{3}{EI} = 2D_1 + 1D_2$$

$$\frac{-1}{EI} = 1D_1 + 4D_2 + 1D_3$$

$$\frac{-2}{EI} = 1D_2 + 2D_3$$

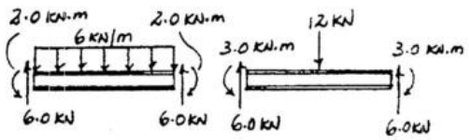

Solving these equations yields

$$D_1 = \frac{1.75}{EI}$$

$$D_2 = \frac{-0.50}{EI}$$

$$D_3 = \frac{-0.75}{EI}$$

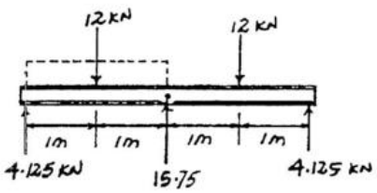

$$Q_4 - 6.0 = -1.5EI\left(\frac{1.75}{EI}\right) - 1.5EI\left(\frac{-0.50}{EI}\right) + 0$$

$Q_4 = 4.125$ kN **Ans**

$$Q_5 - 12.0 = 1.5EI\left(\frac{1.75}{EI}\right) + 0 - 1.5EI\left(\frac{-0.75}{EI}\right)$$

$Q_4 = 15.75$ kN **Ans**

$$Q_6 - 6.0 = 0 + 1.5EI\left(\frac{-0.50}{EI}\right) + 1.5EI\left(\frac{-0.75}{EI}\right)$$

$Q_6 = 4.125$ kN **Ans**

Check for equilibrium

$\circlearrowleft + \Sigma M_2 = 0;$ $\quad 4.125(2) + 12(1) - 4.125(2) - 12(1) = 0$ **(Check)**

$+\uparrow \Sigma F_y = 0;$ $\quad 4.125 + 15.75 + 4.125 - 12 - 12 = 0$ **(Check)**

www.e-kitabi.com

c15.qxd 6/24/08 5:01 PM Page 392

© 2009 by R.C. Hibbeler. Published by Pearson Prentice Hall, Pearson Education, Inc., Upper Saddle River, NJ. All rights reserved. This material is protected under all copyright laws as they currently exist. No portion of this material may be reproduced, in any form or by any means, without permission in writing from the publisher.

15–11. Determine the reactions at the supports. There is a slider at ①. EI is constant.

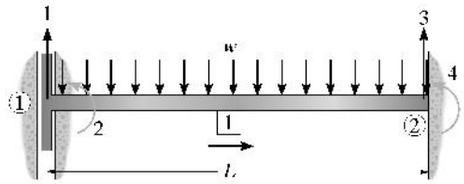

$$\begin{bmatrix} \frac{-wL}{2} \\ Q_2 - \frac{wL^2}{12} \\ Q_3 - \frac{wl}{2} \\ Q_4 + \frac{wL^2}{12} \end{bmatrix} = EI \begin{bmatrix} \frac{12}{L^3} & \frac{6}{L^2} & \frac{-12}{L^3} & \frac{6}{L^2} \\ \frac{6}{L^2} & \frac{4}{L} & \frac{-6}{L^2} & \frac{2}{L} \\ \frac{-12}{L^3} & \frac{-6}{L^2} & \frac{12}{L^3} & \frac{-6}{L^2} \\ \frac{6}{L^2} & \frac{2}{L} & \frac{-6}{L^2} & \frac{4}{L} \end{bmatrix} \begin{bmatrix} D_1 \\ 0 \\ 0 \\ 0 \end{bmatrix}$$

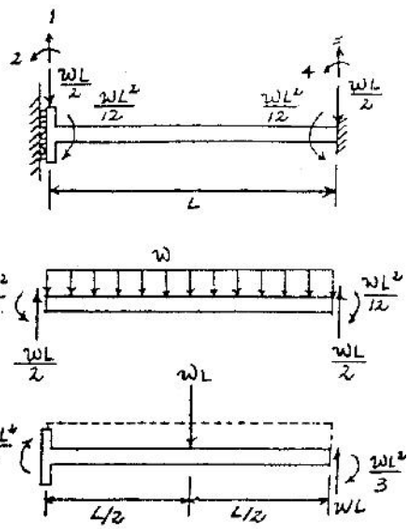

$$\frac{-wL}{2EI} = \frac{12}{L^3}D_1 + 0 + 0 + 0$$

$$D_1 = \frac{-wL^4}{24EI}$$

$$Q_2 - \frac{wL^2}{12} = \frac{6}{L^2}EI\left(\frac{-wL^4}{24EI}\right)$$

$$Q_2 = -\frac{wL^2}{6} \qquad \textbf{Ans}$$

$$Q_3 - \frac{wl}{2} = \frac{-12}{L^3}EI\left(\frac{-wL^4}{24EI}\right)$$

$$Q_3 = wL \qquad \textbf{Ans}$$

$$Q_4 + \frac{wL^2}{12} = \frac{6}{L^2}EI\left(\frac{-wL^4}{24EI}\right)$$

$$Q_4 = -\frac{wL^2}{3} \qquad \textbf{Ans}$$

Check for equilibrium

$$\zeta + \Sigma M_1 = 0; \quad wL(L) - \frac{wL^2}{6} - \frac{wL^2}{3} - wL\left(\frac{L}{2}\right) = 0 \qquad \text{(Check)}$$

$$+\uparrow \Sigma F_y = 0; \quad wL - wL = 0 \qquad \text{(Check)}$$

www.e-kitabi.com

© 2009 by R.C. Hibbeler. Published by Pearson Prentice Hall, Pearson Education, Inc., Upper Saddle River, NJ. All rights reserved. This material is protected under all copyright laws as they currently exist. No portion of this material may be reproduced, in any form or by any means, without permission in writing from the publisher.

16–1. Determine the structure stiffness matrix **K** for the frame. Assume ① and ③ are pins. Take $E = 29(10^3)$ ksi, $I = 600\ \text{in}^4$, $A = 10\ \text{in}^2$ for each member.

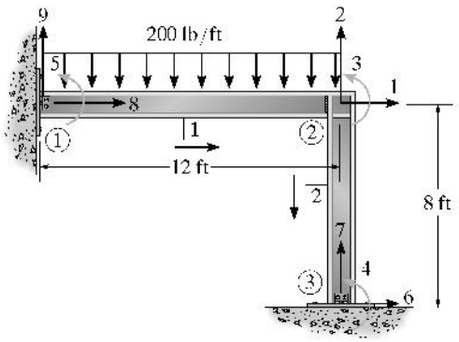

Member 1

$$\lambda_x = \frac{12-0}{12} = 1 \qquad \lambda_y = 0$$

$$\frac{AE}{L} = \frac{(10)(29)(10^3)}{(12)(12)} = 2013.89$$

$$\frac{12EI}{L^3} = \frac{12(29)(10^3)(600)}{(12^3)(12^3)} = 69.93$$

$$\frac{6EI}{L^2} = \frac{6(29)(10^3)(600)}{(12^2)(12^2)} = 5034.72$$

$$\frac{4EI}{L} = \frac{4(29)(10^3)(600)}{(12)(12)} = 483\,333.33$$

$$\frac{2EI}{L} = \frac{2(29)(10^3)(600)}{(12)(12)} = 241\,666.67$$

$$\mathbf{k}_1 = \begin{bmatrix} 2013.89 & 0 & 0 & -2013.89 & 0 & 0 \\ 0 & 69.93 & 5034.72 & 0 & -69.93 & 5034.72 \\ 0 & 5034.72 & 483\,333.33 & 0 & -5034.72 & 241\,666.67 \\ -2013.89 & 0 & 0 & 2013.89 & 0 & 0 \\ 0 & -69.93 & -5034.72 & 0 & 69.93 & -5034.72 \\ 0 & 5034.72 & 241\,666.67 & 0 & -5034.72 & 483\,333.33 \end{bmatrix}$$

Member 2

$$\lambda_x = 0 \qquad \lambda_y = \frac{-8-0}{8} = -1$$

$$\frac{AE}{L} = \frac{10(29)(10^3)}{8(12)} = 3020.83$$

$$\frac{12EI}{L^3} = \frac{12(29)(10^3)(600)}{(8^3)(12^3)} = 236.00$$

$$\frac{6EI}{L^2} = \frac{6(29)(10^3)(600)}{(8^2)(12)^2} = 11\,328.13$$

$$\frac{4EI}{L} = \frac{4(29)(10^3)(600)}{8(12)} = 725\,000$$

$$\frac{2EI}{L} = \frac{2(29)(10^3)(600)}{8(12)} = 362\,500$$

$$\mathbf{k}_2 = \begin{bmatrix} 236.00 & 0 & 11\,328.13 & -236.00 & 0 & 11\,328.13 \\ 0 & 3020.83 & 0 & 0 & -3020.83 & 0 \\ 11\,328.13 & 0 & 725\,000 & -11\,328.13 & 0 & 362\,500 \\ -236.00 & 0 & -11\,328.13 & 236.00 & 0 & -11\,328.13 \\ 0 & -3020.83 & 0 & 0 & 3020.83 & 0 \\ 11\,328.13 & 0 & 362\,500 & -11\,328.13 & 0 & 725\,000 \end{bmatrix}$$

Structure stiffness matrix

$$\mathbf{K} = \begin{bmatrix} 2249.89 & 0 & 11328.13 & 11328.13 & 0 & -236.00 & 0 & -2013.89 & 0 \\ 0 & 3090.76 & -5034.72 & 0 & -5034.72 & 0 & -3020.83 & 0 & -69.93 \\ 11328.13 & -5034.72 & 1208333.33 & 362500 & 241666.67 & -11328.13 & 0 & 0 & 5034.72 \\ 11328.13 & 0 & 362500 & 725000 & 0 & -11328.13 & 0 & 0 & 0 \\ 0 & -5034.72 & 241666.67 & 0 & 483\,333.33 & 0 & 0 & 0 & 5034.72 \\ -236.00 & 0 & -11328.13 & -11328.13 & 0 & 236.00 & 0 & 0 & 0 \\ 0 & -3020.83 & 0 & 0 & 0 & 0 & 3020.83 & 0 & 0 \\ -2013.89 & 0 & 0 & 0 & 0 & 0 & 0 & 2013.89 & 0 \\ 0 & -69.93 & 5034.72 & 0 & 5034.72 & 0 & 0 & 0 & 69.93 \end{bmatrix}$$ **Ans**

www.e-kitabi.com

© 2009 by R.C. Hibbeler. Published by Pearson Prentice Hall, Pearson Education, Inc., Upper Saddle River, NJ. All rights reserved. This material is protected under all copyright laws as they currently exist. No portion of this material may be reproduced, in any form or by any means, without permission in writing from the publisher.

16–2. Determine the internal loadings at the ends of each member. Assume ① and ③ are pins. Take $E = 29(10^3)$ ksi, $I = 600\ \text{in}^4$, $A = 10\ \text{in}^2$ for each member.

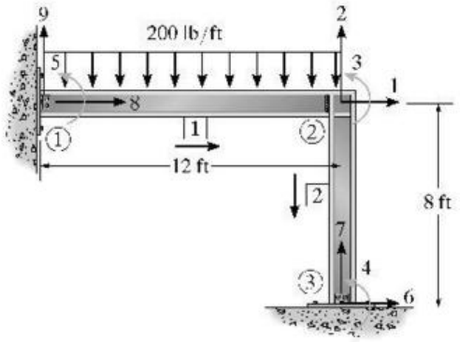

See Prob. 16 - 1

$$\mathbf{D}_k = \begin{bmatrix} 0 \\ 0 \\ 0 \\ 0 \end{bmatrix} \qquad \mathbf{Q}_k = \begin{bmatrix} 0 \\ -1.2 \\ 28.8 \\ 0 \\ -28.8 \end{bmatrix}$$

$$\begin{bmatrix} 0 \\ -1.20 \\ 28.8 \\ 0 \\ -28.8 \\ Q_4 \\ Q_7 \\ Q_8 \\ Q_9 - 1.20 \end{bmatrix} = \begin{bmatrix} 2249.89 & 0 & 11328.13 & 11328.13 & 0 & -236.00 & 0 \\ 0 & 3090.76 & -5034.72 & 0 & -5034.72 & 0 & -3020.83 \\ 11328.13 & -5034.72 & 1208333.33 & 362500 & 241666.67 & -11328.13 & 0 \\ 11328.13 & 0 & 362500 & 725000 & 0 & -11328.13 & 0 \\ 0 & -5034.72 & 241666.67 & 0 & 483333.33 & 0 & 0 \\ -236.00 & 0 & -11328.13 & -11328.13 & 0 & 236.00 & 0 \\ 0 & -3020.83 & 0 & 0 & 0 & 0 & 3020.83 \\ -2013.89 & 0 & 0 & 0 & 0 & 0 & 0 \\ 0 & -69.93 & 5034.72 & 0 & 5034.72 & 0 & 0 \end{bmatrix} \begin{bmatrix} -2013.89 & 0 \\ 0 & -69.93 \\ 0 & 5034.72 \\ 0 & 0 \\ 0 & 5034.72 \\ 0 & 0 \\ 0 & 0 \\ 2013.89 & 0 \\ 0 & 69.93 \end{bmatrix} \begin{bmatrix} D_1 \\ D_2 \\ D_3 \\ D_4 \\ D_5 \\ 0 \\ 0 \\ 0 \\ 0 \end{bmatrix}$$

Partition matrix

$$\begin{bmatrix} 0 \\ -1.20 \\ 28.8 \\ 0 \\ -28.8 \end{bmatrix} = \begin{bmatrix} 2249.89 & 0 & 11328.13 & 11328.13 & 0 \\ 0 & 3090.76 & -5034.72 & 0 & -5034.72 \\ 11328.13 & -5034.72 & 1208333.33 & 362500 & 241666.67 \\ 11328.13 & 0 & 362500 & 725000 & 0 \\ 0 & -5034.72 & 241666.67 & 0 & 483333.33 \end{bmatrix} \begin{bmatrix} D_1 \\ D_2 \\ D_3 \\ D_4 \\ D_5 \end{bmatrix} + \begin{bmatrix} 0 \\ 0 \\ 0 \\ 0 \\ 0 \end{bmatrix}$$

$$0 = 2249.89D_1 + 11328.13D_3 + 11328.13D_4$$
$$-1.2 = 3090.76D_2 - 5034.72D_3 - 5034.72D_5$$
$$28.8 = 11\,328.13D_1 - 5034.72D_2 + 1\,208\,333.33D_3 + 362\,500D_4 + 241\,666.67D_5$$
$$0 = 11\,328.13D_1 + 362\,500D_3 + 725\,000D_4$$
$$-28.8 = -5034.72D_2 + 241\,666.67D_3 + 483\,333.33D_5$$

$$D_1 = -0.0001290\ \text{in.} \quad D_2 = -0.000455\ \text{in.} \quad D_3 = 0.0000472\ \text{rad}$$
$$D_4 = -0.0000216\ \text{rad} \quad D_5 = -0.0000879\ \text{rad}$$

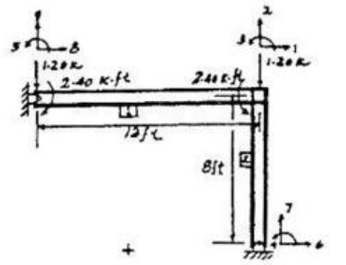

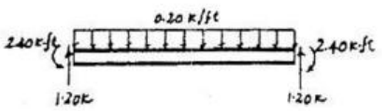

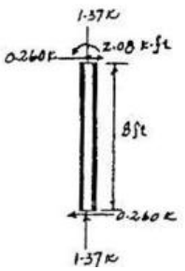

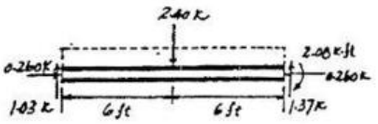

www.e-kitabi.com

c16.qxd 6/24/08 5:04 PM Page 395

© 2009 by R.C. Hibbeler. Published by Pearson Prentice Hall, Pearson Education, Inc., Upper Saddle River, NJ. All rights reserved. This material is protected under all copyright laws as they currently exist. No portion of this material may be reproduced, in any form or by any means, without permission in writing from the publisher.

For member 1:

$$\begin{bmatrix} q_{Nx'} \\ q_{Ny'} \\ q_{Nz'} \\ q_{Fx'} \\ q_{Fy'} \\ q_{Fz'} \end{bmatrix} = \begin{bmatrix} 2013.89 & 0 & 0 & -2013.89 & 0 & 0 \\ 0 & 69.93 & 5034.72 & 0 & -69.93 & 5034.72 \\ 0 & 5034.72 & 483\,333.33 & 0 & -5034.72 & 241\,666.67 \\ -2013.89 & 0 & 0 & 2013.89 & 0 & 0 \\ 0 & -69.93 & -5034.72 & 0 & 69.93 & -5034.72 \\ 0 & 5034.72 & 241\,666.67 & 0 & -5034.72 & 483\,333.33 \end{bmatrix} \begin{bmatrix} 1 & 0 & 0 & 0 & 0 & 0 \\ 0 & 1 & 0 & 0 & 0 & 0 \\ 0 & 0 & 1 & 0 & 0 & 0 \\ 0 & 0 & 0 & 1 & 0 & 0 \\ 0 & 0 & 0 & 0 & 1 & 0 \\ 0 & 0 & 0 & 0 & 0 & 1 \end{bmatrix} \begin{bmatrix} -0.000129 \\ -0.000455 \\ -0.0000472 \\ 0 \\ 0 \\ -0.0001216 \end{bmatrix}$$

$$+ \begin{bmatrix} 0 \\ 1.20 \\ 2.8 \\ 0 \\ 1.20 \\ -2.8 \end{bmatrix}$$

$q_{Ny'} = 1.03\,\text{k}$ **Ans**

$q_{Nz'} = 0$ **Ans**

$q_{Fx'} = -0.260\,\text{k}$ **Ans**

$q_{Fy'} = 1.37\,\text{k}$ **Ans**

$q_{Fz'} = -2.08\,\text{k}\cdot\text{ft}$ **Ans**

For member 2:

$$\begin{bmatrix} q_{Nx'} \\ q_{Ny'} \\ q_{Nz'} \\ q_{Fx'} \\ q_{Fy'} \\ q_{Fz'} \end{bmatrix} = \begin{bmatrix} 3020.83 & 0 & 0 & -3020.83 & 0 & 0 \\ 0 & 236.00 & 11\,328.13 & 0 & -236.00 & 11\,328.13 \\ 0 & 11\,328.13 & 725\,000 & 0 & -11\,328.13 & 362\,500 \\ -3020.83 & 0 & 0 & 3020.83 & 0 & 0 \\ 0 & -236.00 & 11\,328.13 & 0 & 236.00 & -11\,328.13 \\ 0 & 11\,328.13 & 362\,500 & 0 & -11\,328.13 & 725\,000 \end{bmatrix} \begin{bmatrix} 0 & -1 & 0 & 0 & 0 & 0 \\ 1 & 0 & 0 & 0 & 0 & 0 \\ 0 & 0 & 1 & 0 & 0 & 0 \\ 0 & 0 & 0 & 0 & -1 & 0 \\ 0 & 0 & 0 & 1 & 0 & 0 \\ 0 & 0 & 0 & 0 & 0 & 1 \end{bmatrix} \begin{bmatrix} -0.000129 \\ -0.000455 \\ 0.0000472 \\ 0 \\ 0 \\ -0.0000216 \end{bmatrix}$$

$$+ \begin{bmatrix} 0 \\ 0 \\ 0 \\ 0 \\ 0 \\ 0 \end{bmatrix}$$

$q_{Nx'} = 1.37\,\text{k}$ **Ans**

$q_{Ny'} = 2.60\,\text{k}$ **Ans**

$q_{Nz'} = 2.08\,\text{k}\cdot\text{ft}$ **Ans**

$q_{Fx'} = -1.37\,\text{k}$ **Ans**

$q_{Fy'} = -0.260\,\text{k}$ **Ans**

$q_{Fz'} = 0$ **Ans**

www.e-kitabi.com

c16.qxd 6/24/08 5:04 PM Page 396

© 2009 by R.C. Hibbeler. Published by Pearson Prentice Hall, Pearson Education, Inc., Upper Saddle River, NJ. All rights reserved. This material is protected under all copyright laws as they currently exist. No portion of this material may be reproduced, in any form or by any means, without permission in writing from the publisher.

16–3. Determine the structure stiffness matrix **K** for each member of the frame. Assume ③ is pinned and ① is fixed. Take $E = 200$ GPa, $I = 300(10^6)$ mm^4, $A = 21(10^3)$ mm^2 for each member.

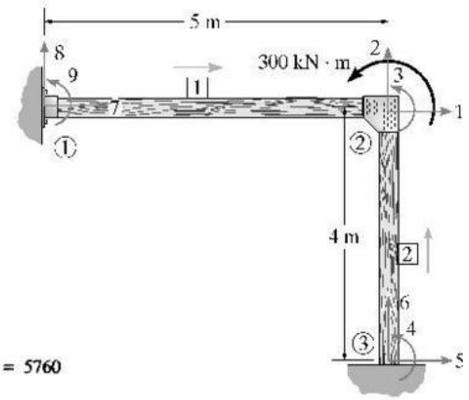

For member 1

$$\lambda_x = \frac{5-0}{5} = 1 \quad \lambda_y = 0$$

$$\frac{AE}{L} = \frac{(0.021)(200)(10^6)}{5} = 840\,000 \qquad \frac{12EI}{L^3} = \frac{(12)(200)(10^6)(300)(10^{-6})}{5^3} = 5760$$

$$\frac{6EI}{L^2} = \frac{6(200)(10^6)(300)(10^{-6})}{5^2} = 14\,400 \qquad \frac{2EI}{L} = \frac{2(200)(10^6)(300)(10^{-6})}{5} = 24\,000$$

$$\frac{4EI}{L} = \frac{4(200)(10^6)(300)(10^{-6})}{5} = 48\,000$$

$$\mathbf{k}_1 = \begin{bmatrix} 840000 & 0 & 0 & -840000 & 0 & 0 \\ 0 & 5760 & 14400 & 0 & -5760 & 14400 \\ 0 & 14400 & 48000 & 0 & -14400 & 24000 \\ -840000 & 0 & 0 & 840000 & 0 & 0 \\ 0 & -5760 & -14400 & 0 & 5760 & -14400 \\ 0 & 14400 & 24000 & 0 & -14400 & 48000 \end{bmatrix}$$

For member 2

$$\lambda_x = 0 \quad \lambda_y = \frac{0-(-4)}{4} = 1$$

$$\frac{AE}{L} = \frac{(0.021)(200)(10^6)}{4} = 1\,050\,000 \qquad \frac{12EI}{L^3} = \frac{12(200)(10^6)(300)(10^{-6})}{4^3} = 11\,250$$

$$\frac{6EI}{L^2} = \frac{6(200)(10^6)(300)(10^{-6})}{4^2} = 22\,500 \qquad \frac{2EI}{L} = \frac{2(200)(10^6)(300)(10^{-6})}{4} = 30\,000$$

$$\frac{4EI}{L} = \frac{4(200)(10^6)(300)(10^{-6})}{4} = 60\,000$$

$$\mathbf{k}_2 = \begin{bmatrix} 11250 & 0 & -22500 & -11250 & 0 & -22500 \\ 0 & 1050000 & 0 & 0 & -1050000 & 0 \\ -22500 & 0 & 60000 & 22500 & 0 & 30000 \\ -11250 & 0 & 22500 & 11250 & 0 & 22500 \\ 0 & -1050000 & 0 & 0 & 1050000 & 0 \\ -22500 & 0 & 30000 & 22500 & 0 & 60000 \end{bmatrix}$$

Structure stiffness matrix

$$\mathbf{K} = \begin{bmatrix} 85\,1250 & 0 & 22\,500 & 22\,500 & -11\,250 & 0 & -840\,000 & 0 & 0 \\ 0 & 105\,5760 & -14\,400 & 0 & 0 & -1\,050\,000 & 0 & -5760 & -14\,400 \\ 22\,500 & -14\,400 & 108\,000 & 30\,000 & -22\,500 & 0 & 0 & 14\,400 & 24\,000 \\ 22\,500 & 0 & 30\,000 & 60\,000 & -22\,500 & 0 & 0 & 0 & 0 \\ -11\,250 & 0 & -22\,500 & -22\,500 & 11\,250 & 0 & 0 & 0 & 0 \\ 0 & -1\,050\,000 & 0 & 0 & 0 & 1\,050\,000 & 0 & 0 & 0 \\ -840\,000 & 0 & 0 & 0 & 0 & 0 & 840\,000 & 0 & 0 \\ 0 & -5760 & 14\,400 & 0 & 0 & 0 & 0 & 5760 & 14\,400 \\ 0 & -14\,400 & 24\,000 & 0 & 0 & 0 & 0 & 14\,400 & 48\,000 \end{bmatrix}$$ **Ans**

www.e-kitabi.com

© 2009 by R.C. Hibbeler. Published by Pearson Prentice Hall, Pearson Education, Inc., Upper Saddle River, NJ. All rights reserved. This material is protected under all copyright laws as they currently exist. No portion of this material may be reproduced, in any form or by any means, without permission in writing from the publisher.

***16–4.** Determine the support reactions at ① and ③. Take $E = 200$ GPa, $I = 300(10^6)$ mm^4, $A = 21(10^3)$ mm^2 for each member.

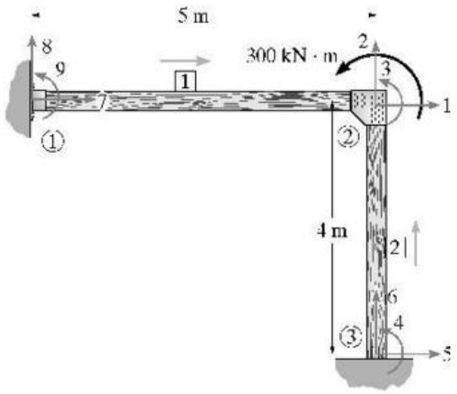

$$\mathbf{D}_2 = \begin{bmatrix} 0 \\ 0 \\ 0 \\ 0 \\ 0 \end{bmatrix} \qquad \mathbf{Q}_2 = \begin{bmatrix} 0 \\ 0 \\ 300 \\ 0 \end{bmatrix}$$

$$\begin{bmatrix} 0 \\ 0 \\ 300 \\ 0 \\ Q_5 \\ Q_6 \\ Q_7 \\ Q_8 \\ Q_9 \end{bmatrix} = \begin{bmatrix} 851250 & 0 & 22500 & 22500 & -11250 & 0 & -840000 & 0 & 0 \\ 0 & 1055760 & -14400 & 0 & 0 & -1050000 & 0 & -5760 & -14400 \\ 22500 & -14400 & 108000 & 30000 & -22500 & 0 & 0 & 14400 & 24000 \\ 22500 & 0 & 30000 & 60000 & -22500 & 0 & 0 & 0 & 0 \\ -11250 & 0 & -22500 & -22500 & 11250 & 0 & 0 & 0 & 0 \\ 0 & -1050000 & 0 & 0 & 0 & 1050000 & 0 & 0 & 0 \\ -840000 & 0 & 0 & 0 & 0 & 0 & 840000 & 0 & 0 \\ 0 & -5760 & 14400 & 0 & 0 & 0 & 0 & 5760 & 14400 \\ 0 & -14400 & 24000 & 0 & 0 & 0 & 0 & 1440 & 48000 \end{bmatrix} \begin{bmatrix} D_1 \\ D_2 \\ D_3 \\ D_4 \\ 0 \\ 0 \\ 0 \\ 0 \\ 0 \end{bmatrix}$$

Partition matrix

$$\begin{bmatrix} 0 \\ 0 \\ 300 \\ 0 \end{bmatrix} = \begin{bmatrix} 851250 & 0 & 22500 & 22500 \\ 0 & 1055760 & -14400 & 0 \\ 22500 & -14400 & 108000 & 30000 \\ 22500 & 0 & 30000 & 60000 \end{bmatrix} \begin{bmatrix} D_1 \\ D_2 \\ D_3 \\ D_4 \end{bmatrix} + \begin{bmatrix} 0 \\ 0 \\ 0 \\ 0 \end{bmatrix}$$

$$0 = 851250D_1 + 22500D_3 + 22500D_4$$
$$0 = 1055760D_2 - 14400D_3$$
$$300 = 22500D_1 - 14400D_2 + 108000D_3 + 30000D_4$$
$$0 = 22500D_1 + 30000D_3 + 60000D_4$$

Solving,

$$D_1 = -0.00004322 \text{ m} \quad D_2 = 0.00004417 \text{ m} \quad D_3 = 0.00323787 \text{ rad} \quad D_4 = -0.00160273 \text{ rad}$$

$$\begin{bmatrix} Q_5 \\ Q_6 \\ Q_7 \\ Q_8 \\ Q_9 \end{bmatrix} = \begin{bmatrix} -11250 & 0 & -22500 & -22500 \\ 0 & -1050000 & 0 & 0 \\ -840000 & 0 & 0 & 0 \\ 0 & -5760 & 14400 & 0 \\ 0 & -14400 & 24000 & 0 \end{bmatrix} \begin{bmatrix} -0.00004322 \\ 0.00004417 \\ 0.00323787 \\ -0.00160273 \end{bmatrix} + \begin{bmatrix} 0 \\ 0 \\ 0 \\ 0 \\ 0 \end{bmatrix}$$

$Q_5 = -36.3$ kN **Ans**
$Q_6 = -46.4$ kN **Ans**
$Q_7 = 36.3$ kN **Ans**
$Q_8 = 46.4$ kN **Ans**
$Q_9 = 77.1$ kN · m **Ans**

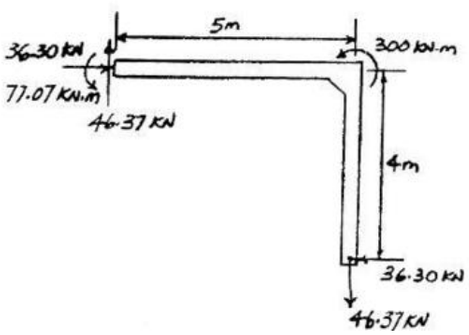

Check equilibrium

$\overset{+}{\rightarrow} \Sigma F_x = 0;$ $36.30 - 36.30 = 0$ (Check)
$+\uparrow \Sigma F_y = 0;$ $46.37 - 46.37 = 0$ (Check)

$\left(+ \Sigma M_1 = 0;\right.$ $300 + 77.07 - 36.30(4) - 46.37(5) = 0$ (Check)

www.e-kitabi.com

c16.qxd 6/24/08 5:04 PM Page 398

© 2009 by R.C. Hibbeler. Published by Pearson Prentice Hall, Pearson Education, Inc., Upper Saddle River, NJ. All rights reserved. This material is protected under all copyright laws as they currently exist. No portion of this material may be reproduced, in any form or by any means, without permission in writing from the publisher.

16–5. Determine the structure stiffness matrix **K** for the frame. Take $E = 29(10^3)$ ksi, $I = 650\ \text{in}^4$, $A = 20\ \text{in}^2$ for each member. The joints at ② and ③ are fixed connected.

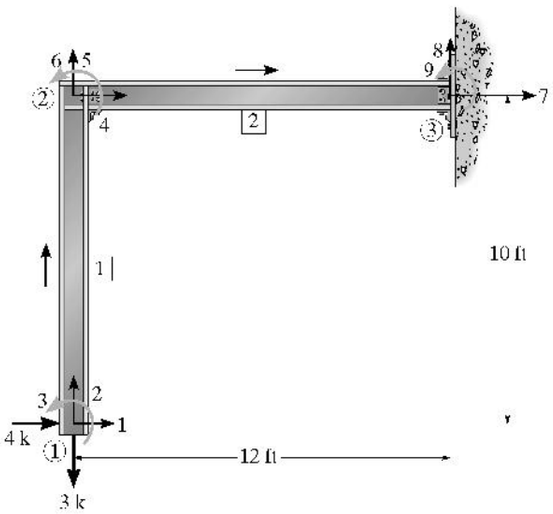

Member 1:

$$\lambda_x = \frac{0-0}{10} = 0\ ; \qquad \lambda_y = \frac{10-0}{10} = 1$$

$$\mathbf{k}_1 = \begin{bmatrix} 130.9 & 0 & -7854.17 & -130.9 & 0 & -7854.17 \\ 0 & 4833.33 & 0 & 0 & -4833.33 & 0 \\ -7854.17 & 0 & 628.33(10^3) & 7854.17 & 0 & 314.167(10^3) \\ -130.9 & 0 & 7854.17 & 130.9 & 0 & 7854.17 \\ 0 & -4833.33 & 0 & 0 & 4833.33 & 0 \\ -7854.17 & 0 & 314.167(10^3) & 7854.17 & 0 & 628.33(10^3) \end{bmatrix}$$

Member 2:

$$\lambda_x = \frac{12-0}{12} = 1\ ; \qquad \lambda_y = \frac{10-10}{12} = 0$$

$$\mathbf{k}_2 = \begin{bmatrix} 4027.78 & 0 & 0 & -4027.28 & 0 & 0 \\ 0 & 75.754 & 5454.28 & 0 & -75.754 & 5454.28 \\ 0 & 5454.28 & 523.61(10^3) & 0 & -5454.28 & 261.81(10^3) \\ -4027.78 & 0 & 0 & 4027.28 & 0 & 0 \\ 0 & -75.754 & -5454.28 & 0 & 75.754 & -5454.28 \\ 0 & 5454.28 & 261.81(10^3) & 0 & -5454.28 & 523.61(10^3) \end{bmatrix}$$

$$\mathbf{K} = \mathbf{k}_1 + \mathbf{k}_2$$

$$\mathbf{K} = \begin{bmatrix} 130.9 & 0 & -7854.17 & -130.9 & 0 & -7854.17 & 0 & 0 & 0 \\ 0 & 4833.33 & 0 & 0 & -4833.33 & 0 & 0 & 0 & 0 \\ -7854.17 & 0 & 628.33(10^3) & 7854.17 & 0 & 314.17(10^3) & 0 & 0 & 0 \\ -130.9 & 0 & 7854.17 & 4158.68 & 0 & 7854.17 & -4027.78 & 0 & 0 \\ 0 & -4833.33 & 0 & 0 & 4909.087 & 5454.28 & 0 & -75.75 & 5454.28 \\ -7854.17 & 0 & 314.17(10^3) & 7854.17 & 5454.28 & 1151.49(10^3) & 0 & -5454.28 & 261.81(10^3) \\ 0 & 0 & 0 & -4027.78 & 0 & 0 & 4027.78 & 0 & 0 \\ 0 & 0 & 0 & 0 & -75.754 & -5454.28 & 0 & 75.754 & -5454.28 \\ 0 & 0 & 0 & 0 & 5454.28 & 261.81(10^3) & 0 & -5454.28 & 523.61(10^3) \end{bmatrix}$$

Ans

www.e-kitabi.com

c16.qxd 6/24/08 5:04 PM Page 399

© 2009 by R.C. Hibbeler. Published by Pearson Prentice Hall, Pearson Education, Inc., Upper Saddle River, NJ. All rights reserved. This material is protected under all copyright laws as they currently exist. No portion of this material may be reproduced, in any form or by any means, without permission in writing from the publisher.

16–6. Determine the structure stiffness matrix **K** for each member of the frame. Take $E = 29(10^3)$ ksi, $I = 700\ \text{in}^4$, $A = 30\ \text{in}^2$ for each member.

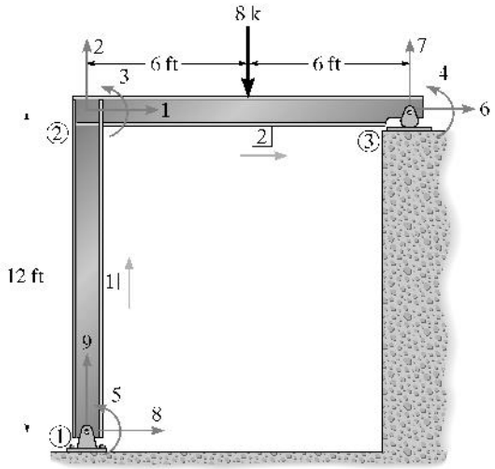

Member 1

$$\lambda_x = 0 \quad \lambda_y = \frac{12-0}{12} = 1 \qquad \frac{AE}{L} = \frac{30(29)(10^3)}{(12)(12)} = 6041.67$$

$$\frac{12EI}{L^3} = \frac{12(29)(10^3)(700)}{(12)^3(12)^3} = 81.58 \qquad \frac{6EI}{L^2} = \frac{6(29)(10^3)(700)}{(12^2)(12^2)} = 5873.84$$

$$\frac{4EI}{L} = \frac{4(29)(10^3)(700)}{(12)(12)} = 563\,888.89 \qquad \frac{2EI}{L} = \frac{2(29)(10^3)(700)}{(12)(12)} = 281\,944.44$$

$$\mathbf{k}_1 = \begin{bmatrix} 81.58 & 0 & -5873.84 & -81.58 & 0 & -5873.84 \\ 0 & 6041.67 & 0 & 0 & -6041.67 & 0 \\ -5873.84 & 0 & 563\,888.89 & 5873.84 & 0 & 281\,944.44 \\ -81.58 & 0 & 5873.84 & 81.58 & 0 & 5873.84 \\ 0 & -6041.67 & 0 & 0 & 6041.67 & 0 \\ -5873.84 & 0 & 281\,944.44 & 5873.84 & 0 & 563\,888.89 \end{bmatrix}$$

Member 2

$$\lambda_x = \frac{12-0}{12} = 1 \quad \lambda_y = 0 \qquad \frac{AE}{L} = 6041.67$$

$$\frac{12EI}{L^3} = 81.58 \qquad \frac{6EI}{L^2} = 5873.84$$

$$\frac{4EI}{L} = 563\,888.89 \qquad \frac{2EI}{L} = 281\,944.44$$

$$\mathbf{k}_2 = \begin{bmatrix} 6041.67 & 0 & 0 & -6041.67 & 0 & 0 \\ 0 & 81.58 & 5873.84 & 0 & -81.58 & 5873.84 \\ 0 & 5873.84 & 563\,888.89 & 0 & -5843.84 & 281\,944.44 \\ -6041.67 & 0 & 0 & 6041.67 & 0 & 0 \\ 0 & -81.58 & -5873.84 & 0 & 81.58 & -5873.84 \\ 0 & 5873.84 & 281\,944.44 & 0 & -5873.84 & 563\,888.89 \end{bmatrix}$$

Structure stiffness matrix

$$\mathbf{K} = \begin{bmatrix} 6123.25 & 0 & 5873.84 & 0 & 5873.84 & -6041.67 & 0 & -81.58 & 0 \\ 0 & 6123.25 & 5873.84 & 5873.84 & 0 & 0 & -81.58 & 0 & -6041.67 \\ 5873.84 & 5873.84 & 1\,127\,777.73 & 281\,944.44 & 281\,944.44 & 0 & -5873.84 & -5873.84 & 0 \\ 0 & 5873.84 & 281\,944.44 & 563\,888.89 & 0 & 0 & -5873.84 & 0 & 0 \\ 5873.84 & 0 & 281\,944.44 & 0 & 563\,888.89 & 0 & 0 & -5873.84 & 0 \\ -6041.67 & 0 & 0 & 0 & 0 & 6041.67 & 0 & 0 & 0 \\ 0 & -81.58 & -5873.84 & -5873.84 & 0 & 0 & 81.58 & 0 & 0 \\ -81.58 & 0 & -5873.84 & 0 & -5873.84 & 0 & 0 & 81.85 & 0 \\ 0 & -6041.67 & 0 & 0 & 0 & 0 & 0 & 0 & 6041.67 \end{bmatrix}$$ **Ans**

www.e-kitabi.com

© 2009 by R.C. Hibbeler. Published by Pearson Prentice Hall, Pearson Education, Inc., Upper Saddle River, NJ. All rights reserved. This material is protected under all copyright laws as they currently exist. No portion of this material may be reproduced, in any form or by any means, without permission in writing from the publisher.

16–7. Determine the internal loadings at the ends of each member. Take $E = 29(10^3)$ ksi, $I = 700\ \text{in}^4$, $A = 30\ \text{in}^2$ for each member.

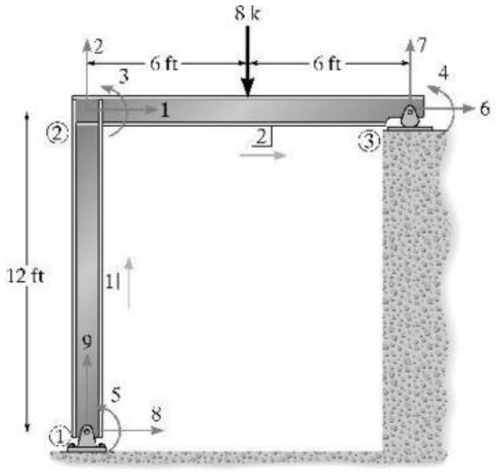

See Prob. 16-6

$$\mathbf{D}_f = \begin{bmatrix} 0 \\ 0 \\ 0 \end{bmatrix} \qquad \mathbf{Q}_k = \begin{bmatrix} 0 \\ -4 \\ -144 \\ 144 \\ 0 \\ 0 \end{bmatrix}$$

$$\begin{bmatrix} 0 \\ -4 \\ -144 \\ 144 \\ 0 \\ 0 \\ Q_7 - 4 \\ Q_8 \\ Q_9 \end{bmatrix} = \begin{bmatrix} 6123.25 & 0 & 5873.84 & 0 & 5873.84 & -6041.67 & 0 & -81.58 & 0 \\ 0 & 3123.25 & 5873.84 & 5873.84 & 0 & 0 & -81.58 & 0 & -6041.67 \\ 5873.84 & 5873.84 & 1\,127\,777.78 & 281\,944.44 & 281\,944.44 & 0 & -5873.84 & -5873.84 & 0 \\ 0 & 5873.84 & 281\,944.44 & 563\,888.89 & 0 & 0 & -5873.84 & 0 & 0 \\ 5873.84 & 0 & 281\,944.44 & 0 & 563\,888.89 & 0 & 0 & -5873.84 & 0 \\ -6041.67 & 0 & 0 & 0 & 0 & 6041.67 & 0 & 0 & 0 \\ 0 & -81.58 & -5873.84 & -5873.84 & 0 & 0 & 81.58 & 0 & 0 \\ -81.58 & 0 & -5873.84 & 0 & -5873.84 & 0 & 0 & 81.58 & 0 \\ 0 & -6041.67 & 0 & 0 & 0 & 0 & 0 & 0 & 6041.67 \end{bmatrix} \begin{bmatrix} D_1 \\ D_2 \\ D_3 \\ D_4 \\ D_5 \\ D_6 \\ 0 \\ 0 \\ 0 \end{bmatrix}$$

Partition matrix

$$\begin{bmatrix} 0 \\ -4 \\ -144 \\ 144 \\ 0 \\ 0 \end{bmatrix} = \begin{bmatrix} 6123.25 & 0 & 5873.84 & 0 & 5873.84 & -6041.67 \\ 0 & 6123.25 & 5873.84 & 5873.84 & 0 & 0 \\ 5873.84 & 5873.84 & 1127777.78 & 281944.44 & 281944.44 & 0 \\ 0 & 5873.84 & 281944.44 & 563888.89 & 0 & 0 \\ 5873.84 & 0 & 281944.44 & 0 & 563888.89 & 0 \\ -6041.67 & 0 & 0 & 0 & 0 & 6041.67 \end{bmatrix} \begin{bmatrix} D_1 \\ D_2 \\ D_3 \\ D_4 \\ D_5 \\ D_6 \end{bmatrix} + \begin{bmatrix} 0 \\ 0 \\ 0 \\ 0 \\ 0 \\ 0 \end{bmatrix}$$

$$0 = 6123.25D_1 + 5873.84D_3 + 5873.84D_5 - 6041.67D_6$$
$$-4 = 6123.25D_2 + 5873.84D_3 + 5873.84D_4$$
$$-144 = 5873.84D_1 + 5873.84D_2 + 1127777.78D_3 + 281944.44D_4 + 281944.44D_5$$
$$144 = 5873.84D_2 + 281944.44D_3 + 563888.89D_4$$
$$0 = 5873.84D_1 + 281944.44D_3 + 563888.89D_5$$
$$0 = -6041.67D_1 + 6041.67D_6$$

Solving,

$D_1 = 0.07289$ in. $\quad D_2 = -0.0006621$ in. $\quad D_3 = -0.0005062$ rad
$D_4 = 0.0005153$ rad $\quad D_5 = -0.0005062$ rad $\quad D_6 = 0.07289$ in.

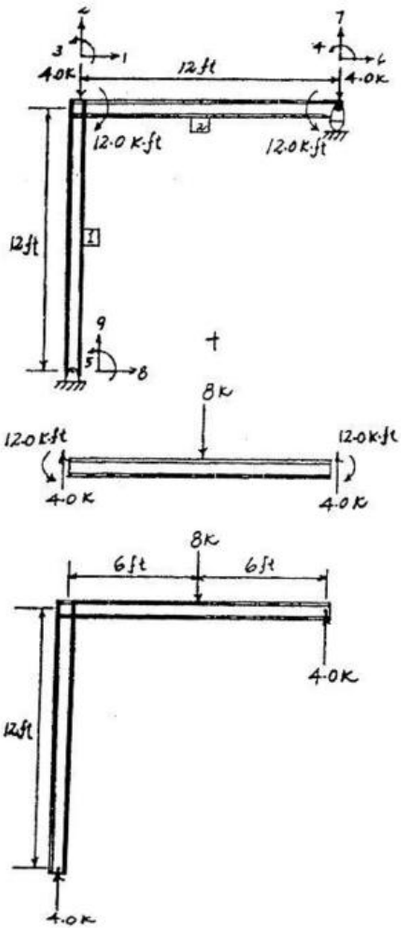

Support reactions

$$Q_7 - 4 = 0 - 81.58(-0.0006621) - 5873.84(-0.0005062) - 5873.84(0.0005153) + 0 + 0$$
$$Q_7 = 4.00\ \text{k} \quad \textbf{Ans}$$

$$Q_8 = -81.58(-0.07289) + 0 - 5873.84(-0.0005062) - 5873.84(-0.0005062)$$
$$Q_8 = 0 \quad \textbf{Ans}$$

$$Q_9 = 0 - 6041.67(-0.0006621) + 0 + 0 + 0 + 0$$
$$Q_7 = 4.00\ \text{k} \quad \textbf{Ans}$$

Check equilibrium

$$+\uparrow \Sigma F_y = 0; \quad -8 + 4 + 4 = 0 \text{ (Check)}$$
$$\zeta + \Sigma M_1 = 0; \quad 4(12) - 8(6) = 0 \text{ (Check)}$$

www.e-kitabi.com

© 2009 by R.C. Hibbeler. Published by Pearson Prentice Hall, Pearson Education, Inc., Upper Saddle River, NJ. All rights reserved. This material is protected under all copyright laws as they currently exist. No portion of this material may be reproduced, in any form or by any means, without permission in writing from the publisher.

***16–8.** Determine the structure stiffness matrix **K** for the frame. Take $E = 29(10^3)$ ksi, $I = 650\ \text{in}^4$, $A = 20\ \text{in}^2$ for each member.

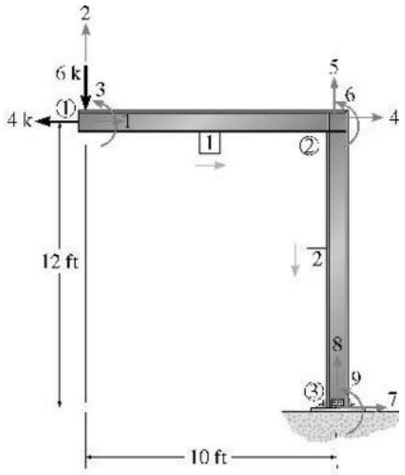

Member 1

$$\lambda_x = \frac{10-0}{10} = 1 \qquad \lambda_y = 0$$

$$\frac{AE}{L} = \frac{20(29)(10^3)}{10(12)} = 4833.33 \qquad \frac{12EI}{L^3} = \frac{12(29)(10^3)(650)}{(10)^3(12)^3} = 130.90$$

$$\frac{6EI}{L^2} = \frac{6(29)(10^3)(650)}{(10)^2(12)^2} = 7854.17 \qquad \frac{4EI}{L} = \frac{4(29)(10^3)(650)}{(10)(12)} = 628333.33$$

$$\frac{2EI}{L} = \frac{2(29)(10^3)(650)}{(10)(12)} = 314166.67$$

$$\mathbf{k}_1 = \begin{bmatrix} 4833.33 & 0 & 0 & -4833.33 & 0 & 0 \\ 0 & 130.90 & 7854.17 & 0 & -130.90 & 7854.17 \\ 0 & 7854.17 & 628333.33 & 0 & -7854.17 & 314166.67 \\ -4833.33 & 0 & 0 & 4833.33 & 0 & 0 \\ 0 & -130.90 & -7854.17 & 0 & 130.90 & -7854.17 \\ 0 & 7854.17 & 314166.67 & 0 & -7854.17 & 628333.33 \end{bmatrix}$$

Member 2

$$\lambda_x = 0 \qquad \lambda_y = \frac{-12-0}{12} = -1$$

$$\frac{AE}{L} = \frac{(20)(29)(10^3)}{(12)(12)} = 4027.78 \qquad \frac{12EI}{L^3} = \frac{12(29)(10^3)(650)}{(12)^3(12)^3} = 75.75$$

$$\frac{6EI}{L^2} = \frac{6(29)(10^3)(650)}{(12)^2(12)^2} = 5454.28 \qquad \frac{4EI}{L} = \frac{4(29)(10^3)(650)}{(12)(12)} = 523611.11$$

$$\frac{2EI}{L} = \frac{2(29)(10^3)(650)}{(12)(12)} = 261805.55$$

$$\mathbf{k}_2 = \begin{bmatrix} 75.75 & 0 & 5454.28 & -75.75 & 0 & 5454.28 \\ 0 & 4027.78 & 0 & 0 & -4027.78 & 0 \\ 5454.28 & 0 & 523611.11 & -5454.28 & 0 & 261805.55 \\ -75.75 & 0 & -5454.28 & 75.75 & 0 & -5454.28 \\ 0 & -4027.78 & 0 & 0 & 4027.78 & 0 \\ 5454.28 & 0 & 261805.55 & -5454.28 & 0 & 523611.11 \end{bmatrix}$$

Structure stiffness matrix

$$\mathbf{K} = \begin{bmatrix} 4833.33 & 0 & 0 & -4833.33 & 0 & 0 & 0 & 0 & 0 \\ 0 & 130.90 & 7854.17 & 0 & -130.90 & 7854.17 & 0 & 0 & 0 \\ 0 & 7854.17 & 628\,333.33 & 0 & -7854.17 & 314\,166.67 & 0 & 0 & 0 \\ -4833.33 & 0 & 0 & 4909.08 & 0 & 5454.28 & -75.75 & 0 & 5454.28 \\ 0 & -130.90 & -7854.17 & 0 & 4158.68 & -7854.17 & 0 & -4027.78 & 0 \\ 0 & 7854.17 & 314\,166.67 & 5454.28 & -7854.17 & 1\,151\,944.44 & -5454.28 & 0 & 261\,805.55 \\ 0 & 0 & 0 & -75.75 & 0 & -5454.28 & 75.75 & 0 & -5454.28 \\ 0 & 0 & 0 & 0 & -4027.78 & 0 & 0 & 4027.78 & 0 \\ 0 & 0 & 0 & 5454.28 & 0 & 261\,805.55 & -5454.28 & 0 & 523\,611.11 \end{bmatrix}$$ **Ans**

www.e-kitabi.com

© 2009 by R.C. Hibbeler. Published by Pearson Prentice Hall, Pearson Education, Inc., Upper Saddle River, NJ. All rights reserved. This material is protected under all copyright laws as they currently exist. No portion of this material may be reproduced, in any form or by any means, without permission in writing from the publisher.

16–9. Determine the components of displacement at ①. Take $E = 29(10^3)$ ksi, $I = 650\ \text{in}^4$, $A = 20\ \text{in}^2$ for each member.

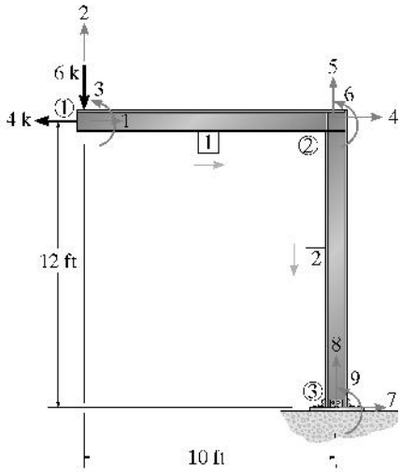

See Prob. 16-8

$$\mathbf{D}_k = \begin{bmatrix} 0 \\ 0 \\ 0 \end{bmatrix} \qquad \mathbf{Q}_k = \begin{bmatrix} -4 \\ -6 \\ 0 \\ 0 \\ 0 \\ 0 \end{bmatrix}$$

$$\begin{bmatrix} -4 \\ -6 \\ 0 \\ 0 \\ 0 \\ 0 \\ Q_7 \\ Q_8 \\ Q_9 \end{bmatrix} = \begin{bmatrix} 4833.33 & 0 & 0 & -4833.33 & 0 & 0 & 0 & 0 & 0 \\ 0 & 130.90 & 7854.17 & 0 & -130.90 & 7854.17 & 0 & 0 & 0 \\ 0 & 7854.17 & 628333.33 & 0 & -7854.17 & 314166.67 & 0 & 0 & 0 \\ -4833.33 & 0 & 0 & 4909.08 & 0 & 5454.28 & -75.75 & 0 & 5454.28 \\ 0 & -130.90 & -7854.17 & 0 & 4158.68 & -7854.17 & 0 & -4027.78 & 0 \\ 0 & 7854.17 & 314166.67 & 5454.28 & -7854.17 & 1151944.44 & -5454.28 & 0 & 261805.55 \\ 0 & 0 & 0 & -75.75 & 0 & -5454.28 & 75.75 & 0 & -5454.28 \\ 0 & 0 & 0 & 0 & -4027.78 & 0 & 0 & 4027.78 & 0 \\ 0 & 0 & 0 & 5454.28 & 0 & 261805.55 & -5454.28 & 0 & 523611.11 \end{bmatrix} \begin{bmatrix} D_1 \\ D_2 \\ D_3 \\ D_4 \\ D_5 \\ D_6 \\ 0 \\ 0 \\ 0 \end{bmatrix}$$

Partition matrix

$$\begin{bmatrix} -4 \\ -6 \\ 0 \\ 0 \\ 0 \\ 0 \end{bmatrix} = \begin{bmatrix} 4833.33 & 0 & 0 & -4833.33 & 0 & 0 \\ 0 & 130.90 & 7854.17 & 0 & -130.90 & 7854.17 \\ 0 & 7854.17 & 628333.33 & 0 & -7854.17 & 314166.67 \\ -4833.33 & 0 & 0 & 4909.08 & 0 & 5454.28 \\ 0 & -130.90 & -7854.17 & 0 & 4158.68 & -7854.17 \\ 0 & 7854.17 & 314166.67 & 5454.28 & -7854.17 & 1151944.44 \end{bmatrix} \begin{bmatrix} D_1 \\ D_2 \\ D_3 \\ D_4 \\ D_5 \\ D_6 \end{bmatrix} + \begin{bmatrix} 0 \\ 0 \\ 0 \\ 0 \\ 0 \\ 0 \end{bmatrix}$$

$$-4 = 4833.33D_1 - 4833.33D_4$$
$$-6 = 130.90D_2 + 7854.17D_3 - 130.90D_5 + 7854.17D_6$$
$$0 = 7854.17D_2 + 628333.33D_3 - 7854.17D_5 + 314166.67D_6$$
$$0 = -4833.33D_1 + 4909.08D_4 + 5454.28D_6$$
$$0 = -130.90D_2 - 7854.17D_3 + 4158.68D_5 - 7854.17D_6$$
$$0 = 7854.17D_2 + 314166.67D_3 + 5454.28D_4 - 7854.17D_5 + 1151944.44D_6$$

Solving the above equations yields

$D_1 = -0.608$ in. **Ans**
$D_2 = -1.11$ in. **Ans**
$D_3 = 0.0100$ rad **Ans**
$D_4 = -0.6076$ in.
$D_5 = -0.001490$ in.
$D_6 = 0.007705$ rad

www.e-kitabi.com

© 2009 by R.C. Hibbeler. Published by Pearson Prentice Hall, Pearson Education, Inc., Upper Saddle River, NJ. All rights reserved. This material is protected under all copyright laws as they currently exist. No portion of this material may be reproduced, in any form or by any means, without permission in writing from the publisher.

16–10. Determine the structure stiffness matrix **K** for the frame. Take $E = 29(10^3)$ ksi, $I = 600\ \text{in}^4$, $A = 10\ \text{in}^2$ for each member. Assume joints ① and ③ are pinned; joint ② is fixed.

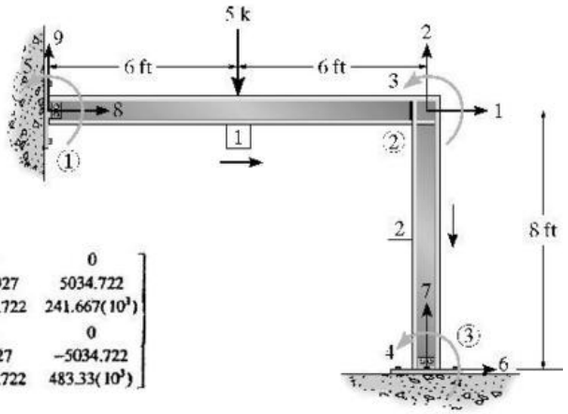

Member 1:

$$\lambda_x = \frac{12-0}{12} = 1\ ; \qquad \lambda_y = \frac{0-0}{8} = 0$$

$$\mathbf{k}_1 = \begin{bmatrix} 2013.89 & 0 & 0 & -2013.89 & 0 & 0 \\ 0 & 69.927 & 5034.722 & 0 & -69.927 & 5034.722 \\ 0 & 5034.722 & 483.33(10^3) & 0 & -5034.722 & 241.667(10^3) \\ -2013.89 & 0 & 0 & 2013.89 & 0 & 0 \\ 0 & -69.927 & -5034.722 & 0 & 69.927 & -5034.722 \\ 0 & 5034.722 & 241.667(10^3) & 0 & -5034.722 & 483.33(10^3) \end{bmatrix}$$

Member 2:

$$\lambda_x = \frac{12-12}{12} = 0\ : \qquad \lambda_y = \frac{-8-0}{8} = -1$$

$$\mathbf{k}_2 = \begin{bmatrix} 236.003 & 0 & 11328.125 & -236.003 & 0 & 11328.125 \\ 0 & 3020.833 & 0 & 0 & -3020.833 & 0 \\ 11328.125 & 0 & 725000 & -11328.125 & 0 & 362500 \\ -236.003 & 0 & -11328.125 & 236.003 & 0 & -11328.125 \\ 0 & -3020.833 & 0 & 0 & 3020.833 & 0 \\ 11328.125 & 0 & 362500 & -11328.125 & 0 & 725000 \end{bmatrix}$$

$$\mathbf{K} = \mathbf{k}_1 + \mathbf{k}_2$$

$$\mathbf{K} = \begin{bmatrix} 2249.892 & 0 & 11328.125 & 11328.125 & 0 & -236 & 0 & -2013.89 & 0 \\ 0 & 3090.76 & -5034.722 & 0 & -5034.722 & 0 & -3020.833 & 0 & -69.927 \\ 11328.125 & -5034.722 & 1208.33(10^3) & 362500 & 241666.67 & -11328.125 & 0 & 0 & 5 034.722 \\ 11328.125 & 0 & 362500 & 725000 & 0 & -11328.125 & 0 & 0 & 0 \\ 0 & -5034.722 & 241666.67 & 0 & 483333.33 & 0 & 0 & 0 & 5034.722 \\ -236 & 0 & -11328.125 & -11328.125 & 0 & 236 & 0 & 0 & 0 \\ 0 & -3020.833 & 0 & 0 & 0 & 0 & 3020.833 & 0 & 0 \\ -2013.89 & 0 & 0 & 0 & 0 & 0 & 0 & 2013.89 & 0 \\ 0 & -69.927 & 5034.722 & 0 & 5034.722 & 0 & 0 & 0 & 69.927 \end{bmatrix}$$ Ans

16–11. Determine the rotation at ① and ③ and the support reactions in Prob. 16–10.

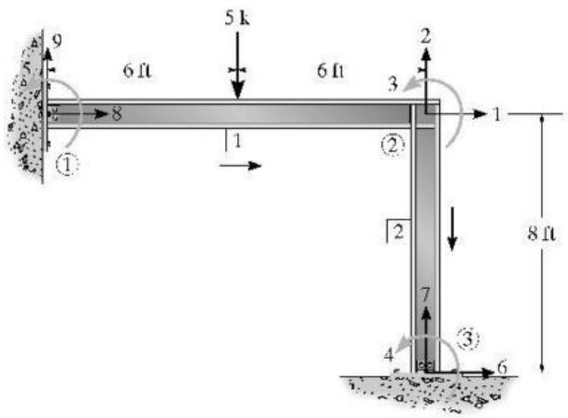

$$\mathbf{D}_s = \begin{bmatrix} 0 \\ 0 \\ 0 \\ 0 \end{bmatrix}, \qquad \mathbf{Q}_s = \begin{bmatrix} 0 \\ -2.5 \\ 90 \\ 0 \\ -90 \end{bmatrix}$$

Use the structure stiffness matrix of Prob. 16–9. Substituting into $\mathbf{Q} = \mathbf{KD}$, partitioning and solving, yields

$D_1 = -0.40633(10^{-3}) = -0.406(10^{-3})$ in. Ans

$D_2 = -1.00818(10^{-3}) = -1.01(10^{-3})$ in.

$D_3 = 0.148705(10^{-3}) = 0.149(10^{-3})$ rad Ans

$D_4 = -0.0680034(10^{-3}) = -0.0680(10^{-3})$ rad

$D_5 = -0.27106(10^{-3}) = -0.271(10^{-3})$ rad

Using these results

The support reactions are as follows,

$Q_6 = -0.818$ k Ans

$Q_7 = 3.05$ k Ans

$Q_8 = 0.818$ k Ans

$Q_9 = 1.95$ k Ans

www.e-kitabi.com

© 2009 by R.C. Hibbeler. Published by Pearson Prentice Hall, Pearson Education, Inc., Upper Saddle River, NJ. All rights reserved. This material is protected under all copyright laws as they currently exist. No portion of this material may be reproduced, in any form or by any means, without permission in writing from the publisher.

***16–12.** Determine the stiffness matrix **k** for each member of the frame. Take $E = 29(10^3)$ ksi, $I = 700\ \text{in}^4$, $A = 15\ \text{in}^2$ for each member.

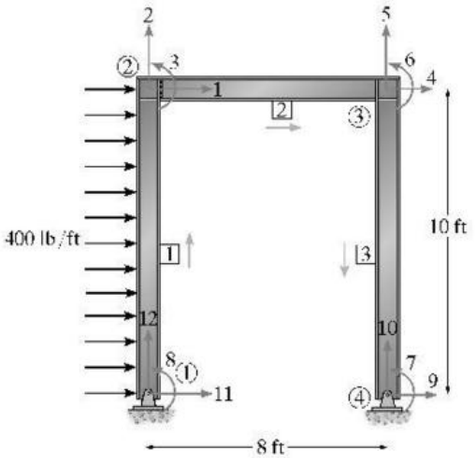

Member 1

$$\lambda_x = 0 \quad \lambda_y = \frac{10-0}{10} = 1 \qquad \frac{AE}{L} = \frac{15(29)(10^3)}{10(12)} = 3625$$

$$\frac{12EI}{L^3} = \frac{12(29)(10^3)(700)}{(10^3)(12^3)} = 140.97 \qquad \frac{6EI}{L^2} = \frac{6(29)(10^3)(700)}{(10^2)(12^2)} = 8458.33$$

$$\frac{4EI}{L} = \frac{4(29)(10)(700)}{(10)(12)} = 676666.67 \qquad \frac{2EI}{L} = \frac{2(29)(10^3)(700)}{(10)(12)} = 338333.33$$

$$\mathbf{k}_1 = \begin{bmatrix} 140.97 & 0 & -8458.33 & -140.97 & 0 & -8458.33 \\ 0 & 3625 & 0 & 0 & -3625 & 0 \\ -8458.33 & 0 & 676666.67 & 8458.33 & 0 & 338333.33 \\ -140.97 & 0 & 8458.33 & 140.97 & 0 & 8458.33 \\ 0 & -3625 & 0 & 0 & 3625 & 0 \\ -8458.33 & 0 & 338333.33 & 8458.33 & 0 & 676666.67 \end{bmatrix}$$

Member 2

$$\lambda_x = \frac{8-0}{8} = 1 \quad \lambda_y = 0 \qquad \frac{AE}{L} = \frac{15(29)(10^3)}{(8)(12)} = 4531.25$$

$$\frac{12EI}{L^3} = \frac{12(29)(10^3)(700)}{(8^3)(12^3)} = 275.34 \qquad \frac{6EI}{L^2} = \frac{6(29)(10^3)(700)}{(8^2)(12^2)} = 13216.15$$

$$\frac{4EI}{L} = \frac{4(29)(10^3)(700)}{(8)(12)} = 845833.33 \qquad \frac{2EI}{L} = \frac{2(29)(10^3)(700)}{(8)(12)} = 422916.67$$

$$\mathbf{k}_2 = \begin{bmatrix} 4531.25 & 0 & 0 & -4531.25 & 0 & 0 \\ 0 & 275.34 & 13216.15 & 0 & -275.34 & 13216.15 \\ 0 & 13216.15 & 845833.33 & 0 & -13216.15 & 422916.67 \\ -4531.25 & 0 & 0 & 4531.25 & 0 & 0 \\ 0 & -275.34 & -13216.15 & 0 & 275.34 & -13216.15 \\ 0 & 13216.15 & 422916.67 & 0 & -13216.15 & 845833.33 \end{bmatrix}$$

Member 3

$$\lambda_x = 0 \quad \lambda_y = \frac{0-10}{10} = -1 \qquad \frac{AE}{L} = 3625$$

$$\frac{12EI}{L^3} = 140.97 \qquad \frac{6EI}{L^2} = 8458.33$$

$$\frac{4EI}{L} = 676666.67 \qquad \frac{2EI}{L} = 38333.33$$

$$\mathbf{k}_3 = \begin{bmatrix} 140.97 & 0 & 8458.33 & -140.97 & 0 & 8458.33 \\ 0 & 3625 & 0 & 0 & -3625 & 0 \\ 8458.33 & 0 & 676666.67 & -8458.33 & 0 & 338333.33 \\ -140.97 & 0 & -8458.33 & 140.97 & 0 & -8458.33 \\ 0 & -3625 & 0 & 0 & 3625 & 0 \\ 8458.33 & 0 & 338333.33 & -8458.33 & 0 & 676666.67 \end{bmatrix}$$

Strucaure stiffness matrix

$$\mathbf{K} = \begin{bmatrix} 4672.22 & 0 & 8458.33 & -4531.25 & 0 & 0 & 0 & 8458.33 & 0 & 0 & -140.97 & 0 \\ 0 & 3900.34 & 13216.15 & 0 & -275.34 & 13216.15 & 0 & 0 & 0 & 0 & 0 & -3625 \\ 8458.33 & 13216.15 & 15225.00 & 0 & -13216.15 & 422916.67 & 0 & 338333.33 & 0 & 0 & -8458.33 & 0 \\ -4531.25 & 0 & 0 & 4672.22 & 0 & 8458.33 & 8458.33 & 0 & -140.97 & 0 & 0 & 0 \\ 0 & -275.34 & -13216.15 & 0 & 3900.34 & -13216.15 & 0 & 0 & 0 & -3625 & 0 & 0 \\ 0 & 13216.15 & 422916.67 & 8458.33 & -13216.15 & 1522500 & 338333.33 & 0 & -8458.33 & 0 & 0 & 0 \\ 0 & 0 & 0 & 8458.33 & 0 & 338333.33 & 676666.67 & 0 & -8458.33 & 0 & 0 & 0 \\ 8458.33 & 0 & 338333.33 & 0 & 0 & 0 & 0 & 676666.67 & 0 & 0 & -8458.33 & 0 \\ 0 & 0 & 0 & -140.97 & 0 & -8458.33 & -8458.33 & 0 & 140.97 & 0 & 0 & 0 \\ 0 & 0 & 0 & 0 & -3625 & 0 & 0 & 0 & 0 & 3625 & 0 & 0 \\ -140.97 & 0 & -8458.33 & 0 & 0 & 0 & 0 & -8458.33 & 0 & 0 & 140.97 & 0 \\ 0 & -3625 & 0 & 0 & 0 & 0 & 0 & 0 & 0 & 0 & 0 & 3625 \end{bmatrix}$$

Ans

www.e-kitabi.com

© 2009 by R.C. Hibbeler. Published by Pearson Prentice Hall, Pearson Education, Inc., Upper Saddle River, NJ. All rights reserved. This material is protected under all copyright laws as they currently exist. No portion of this material may be reproduced, in any form or by any means, without permission in writing from the publisher.

16–13. Determine the reactions at the supports ① and ④. Joints ① and ④ are pin connected and ② and ③ are fixed connected. Take $E = 29(10^3)$ ksi, $I = 700\ \text{in}^4$, $A = 15\ \text{in}^2$ for each member.

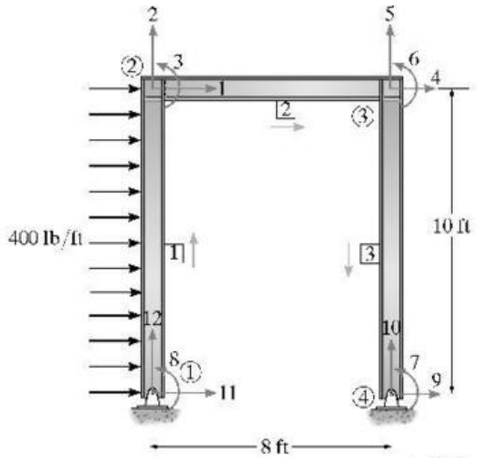

$$\mathbf{D}_1 = \begin{bmatrix} 0 \\ 0 \\ 0 \\ 0 \end{bmatrix} \qquad \mathbf{Q}_2 = \begin{bmatrix} 2 \\ 0 \\ 40 \\ 0 \\ 0 \\ 0 \\ 0 \\ -40 \end{bmatrix}$$

$$\begin{bmatrix} 2.0 \\ 0 \\ 40 \\ 0 \\ 0 \\ 0 \\ -40 \\ Q_9 \\ Q_{10} \\ Q_{11}+2 \\ Q_{12} \end{bmatrix} = \begin{bmatrix} 4672.22 & 0 & 8458.33 & -4531.25 & 0 & 0 & 0 & 8458.33 & 0 & 0 & -140.97 & 0 \\ 0 & 3900.34 & 13216.15 & 0 & -275.34 & 13216.15 & 0 & 0 & 0 & 0 & 0 & -3625 \\ 8458.33 & 13216.15 & 1522500 & 0 & -13216.15 & 422916.67 & 0 & 338333.33 & 0 & 0 & -8458.33 & 0 \\ -4531.25 & 0 & 0 & 4672.22 & 0 & 8458.33 & 8458.33 & 0 & -140.9^- & 0 & 0 & 0 \\ 0 & -275.34 & -13216.15 & 0 & 3900.34 & -13216.15 & 0 & 0 & 0 & -3625 & 0 & 0 \\ 0 & 13216.15 & 422916.67 & 8458.33 & -13216.15 & 1522500 & 338333.33 & 0 & -8458.33 & 0 & 0 & 0 \\ 0 & 0 & 0 & 8458.33 & 0 & 338333.33 & 676666.67 & 0 & -8458.33 & 0 & 0 & 0 \\ 8458.33 & 0 & 338333.33 & 0 & 0 & 0 & 0 & 676666.67 & 0 & 0 & -8458.33 & 0 \\ 0 & 0 & 0 & -140.97 & 0 & -8458.33 & -8458.33 & 0 & 140.9^- & 0 & 0 & 0 \\ 0 & 0 & 0 & 0 & -3625 & 0 & 0 & 0 & 0 & 3625 & 0 & 0 \\ -140.97 & 0 & -8458.33 & 0 & 0 & 0 & 0 & -8458.33 & 0 & 0 & 140.97 & 0 \\ 0 & -3625 & 0 & 0 & 0 & 0 & 0 & 0 & 0 & 0 & 0 & 3625 \end{bmatrix} \begin{bmatrix} D_1 \\ D_2 \\ D_3 \\ D_4 \\ D_5 \\ D_6 \\ D_7 \\ D_8 \\ 0 \\ 0 \\ 0 \\ 0 \end{bmatrix}$$

$$\begin{bmatrix} 2 \\ 0 \\ 40 \\ 0 \\ 0 \\ 0 \\ -40 \end{bmatrix} = \begin{bmatrix} 4672.22 & 0 & 8458.33 & -4531.25 & 0 & 0 & 0 & 8458.33 \\ 0 & 3900.34 & 13216.15 & 0 & -275.34 & 13216.15 & 0 & 0 \\ 8458.33 & 13216.15 & 1522500 & 0 & -13216.15 & 422916.67 & 0 & 338333.33 \\ -4531.25 & 0 & 0 & 4672.22 & 0 & 8458.33 & 8458.33 & 0 \\ 0 & -275.34 & -13216.15 & 0 & 3900.34 & -13216.15 & 0 & 0 \\ 0 & 13216.15 & 422916.67 & 8458.33 & -13216.15 & 1522500 & 338333.33 & 0 \\ 0 & 0 & 0 & 8458.33 & 0 & 338333.33 & 676666.67 & 0 \\ 8458.33 & 0 & 338333.33 & 0 & 0 & 0 & 0 & 676666.67 \end{bmatrix} \begin{bmatrix} D_1 \\ D_2 \\ D_3 \\ D_4 \\ D_5 \\ D_6 \\ D_7 \\ D_8 \end{bmatrix} + \begin{bmatrix} 0 \\ 0 \\ 0 \\ 0 \\ 0 \\ 0 \\ 0 \\ 0 \end{bmatrix}$$

$$2.0 = 4672.22D_1 + 8458.33D_3 - 4531.25D_4 + 8458.33D_8$$
$$0 = 3900.34D_2 + 13216.15D_3 - 275.34D_5 + 13216.15D_6$$
$$40 = 8458.33D_1 + 13216.15D_2 + 1522500D_3 - 13216.15D_5 + 422916.67D_6 + 338333.33D_8$$
$$0 = -4531.25D_1 + 4672.22D_4 + 8458.33D_6 + 8458.33D_7$$
$$0 = -275.34D_2 - 13216.15D_3 + 3900.34D_5 - 13216.15D_6$$
$$0 = 13216.15D_2 + 422916.67D_3 + 8458.33D_4 - 13216.15D_5 + 1522500D_6 + 338333.33D_7$$
$$0 = 8458.33D_4 + 338333.33D_6 + 676666.67D_7$$
$$-40 = 8458.33D_1 + 338333.33D_3 + 676666.67D_8$$

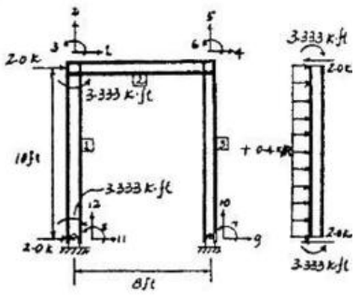

Solving,

$$D_1 = 0.04867\ \text{in.} \quad D_2 = 0.0006897\ \text{in.} \quad D_3 = -0.00007727\ \text{rad} \quad D_4 = 0.04842\ \text{in.}$$
$$D_5 = -0.0006897\ \text{in.} \quad D_6 = -0.0001406\ \text{rad} \quad D_7 = -0.0005350\ \text{rad} \quad D_8 = -0.0006288\ \text{rad}$$

Support reactions

$$\begin{bmatrix} Q_9 \\ Q_{10} \\ Q_{11}+2 \\ Q_{12} \end{bmatrix} = \begin{bmatrix} 0 & 0 & 0 & -140.97 & 0 & -8458.33 & -8458.33 & 0 \\ 0 & 0 & 0 & 0 & -3625 & 0 & 0 & 0 \\ -140.97 & 0 & -8458.33 & 0 & 0 & 0 & 0 & -8458.33 \\ 0 & -3625 & 0 & 0 & 0 & 0 & 0 & 0 \end{bmatrix} \begin{bmatrix} 0.04867 \\ 0.0006897 \\ -0.00007727 \\ 0.04842 \\ -.0006897 \\ -0.0001406 \\ -0.0005350 \\ -0.0006288 \end{bmatrix} + \begin{bmatrix} 0 \\ 0 \\ 0 \\ 0 \\ 0 \\ 0 \\ 0 \\ 0 \end{bmatrix}$$

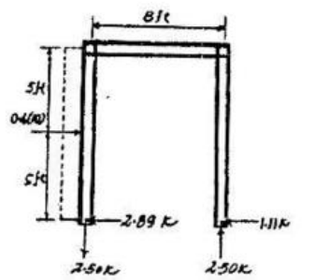

$$Q_9 = -1.11\ \text{k} \quad \textbf{Ans}$$
$$Q_{10} = 2.50\ \text{k} \quad \textbf{Ans}$$
$$Q_{11} = -2.89\ \text{k} \quad \textbf{Ans}$$
$$Q_{12} = -2.50\ \text{k} \quad \textbf{Ans}$$

Check for equilibrium

$$\pm \Sigma F_x = 0; \quad 0.4(10) - 2.89 - 1.11 = 0 \ \text{(Check)}$$
$$+\uparrow \Sigma F_y = 0; \quad 2.50 - 2.50 = 0 \ \text{(Check)}$$
$$+ \Sigma M_1 = 0; \quad 2.50(8) - (0.4)(10)(5) = 0 \ \text{(Check)}$$

www.e-kitabi.com

c16.qxd 6/24/08 5:04 PM Page 406

© 2009 by R.C. Hibbeler. Published by Pearson Prentice Hall, Pearson Education, Inc., Upper Saddle River, NJ. All rights reserved. This material is protected under all copyright laws as they currently exist. No portion of this material may be reproduced, in any form or by any means, without permission in writing from the publisher.

16–14. Determine the structure stiffness matrix **K** for the two-member frame. Take $E = 200\,\text{GPa}$, $I = 350(10^6)\,\text{mm}^4$, $A = 20(10^3)\,\text{mm}^2$ for each member. Joints ① and ③ are pinned and joint ② is fixed.

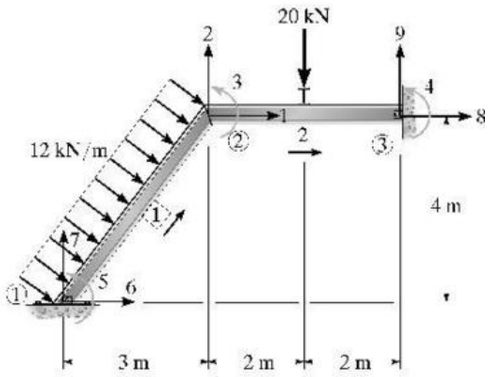

Member 1

$$\lambda_x = \frac{3-0}{5} = 0.6 \qquad \lambda_y = \frac{4-0}{5} = 0.8$$

$$\frac{AE}{L} = \frac{20(10^{-3})(200)(10^9)}{5} = 800(10^6)$$

$$\frac{12EI}{L^3} = \frac{12(200)(10^9)(350)(10^{-6})}{(5)^3} = 6.720(10^6)$$

$$\frac{6EI}{L^2} = \frac{6(200)(10^9)(350)(10^{-6})}{(5)^2} = 16.800(10^6)$$

$$\frac{4EI}{L} = \frac{4(200)(10^9)(350)(10^{-6})}{5} = 56.00(10^6)$$

$$\frac{2EI}{L} = \frac{2(200)(10^9)(350)(10^{-6})}{5} = 28.00(10^6)$$

$$\mathbf{k}_1 = (10^6)\begin{bmatrix} 292.30 & 380.77 & -13.44 & -292.30 & -380.77 & -13.44 \\ 380.77 & 514.42 & 10.08 & -380.77 & -514.42 & 10.08 \\ -13.44 & 10.08 & 56.00 & 13.44 & -10.08 & 28 \\ -292.30 & -380.77 & 13.44 & 292.30 & 380.77 & 13.44 \\ -380.77 & -514.42 & -10.08 & 380.77 & 514.42 & -10.08 \\ -13.44 & 10.08 & 28.00 & 13.44 & -10.08 & 56.00 \end{bmatrix}$$

Member 2

$$\lambda_x = \frac{7-3}{4} = 1 \qquad \lambda_y = \frac{4-4}{4} = 0$$

$$\frac{AE}{L} = \frac{20(10^{-3})(200)(10^9)}{4} = 1000(10^6)$$

$$\frac{12EI}{L^3} = \frac{12(200)(10^9)(350)(10^{-6})}{(4)^3} = 13.125(10^6)$$

$$\frac{6EI}{L^2} = \frac{6(200)(10^9)(350)(10^{-6})}{(4)^2} = 26.25(10^6)$$

$$\frac{4EI}{L} = \frac{4(200)(10^9)(350)(10^{-6})}{4} = 70.00(10^6)$$

$$\frac{2EI}{L} = \frac{2(200)(10^9)(350)(10^{-6})}{4} = 35.00(10^6)$$

$$\mathbf{k}_2 = (10^6)\begin{bmatrix} 1000 & 0 & 0 & -1000 & 0 & 0 \\ 0 & 13.125 & 26.25 & 0 & -13.125 & 26.25 \\ 0 & 26.25 & 70.00 & 0 & -26.25 & 35.00 \\ -1000 & 0 & 0 & 1000 & 0 & 0 \\ 0 & -13.125 & -26.25 & 0 & 13.125 & -26.25 \\ 0 & 26.25 & 35.00 & 0 & -26.25 & 70.00 \end{bmatrix}$$

Structure stiffness matrix

$$\mathbf{K} = (10^6)\begin{bmatrix} 1292.3 & 380.77 & 13.44 & 0 & 13.44 & -292.3 & -380.77 & -1000 & 0 \\ 380.77 & 527.544 & 16.17 & 26.25 & -10.08 & -380.77 & -514.42 & 0 & -13.125 \\ 13.44 & 16.17 & 126 & 35 & 28 & -13.44 & 10.08 & 0 & -26.25 \\ 0 & 26.25 & 35 & 70 & 0 & 0 & 0 & 0 & -26.25 \\ 13.44 & -10.08 & 28 & 0 & 56 & -13.44 & 10.08 & 0 & 0 \\ -292.3 & -380.77 & -13.44 & 0 & -13.44 & 292.3 & 380.77 & 0 & 0 \\ -380.77 & -514.42 & 10.08 & 0 & 10.08 & 380.77 & 514.42 & 0 & 0 \\ -1000 & 0 & 0 & 0 & 0 & 0 & 0 & 1000 & 0 \\ 0 & -13.125 & -26.25 & -26.25 & 0 & 0 & 0 & 0 & 13.125 \end{bmatrix}$$

Ans

www.e-kitabi.com

c16.qxd 6/24/08 5:04 PM Page 407

© 2009 by R.C. Hibbeler. Published by Pearson Prentice Hall, Pearson Education, Inc., Upper Saddle River, NJ. All rights reserved. This material is protected under all copyright laws as they currently exist. No portion of this material may be reproduced, in any form or by any means, without permission in writing from the publisher.

16–15. Determine the support reactions at ① and ③ in Prob. 16–14.

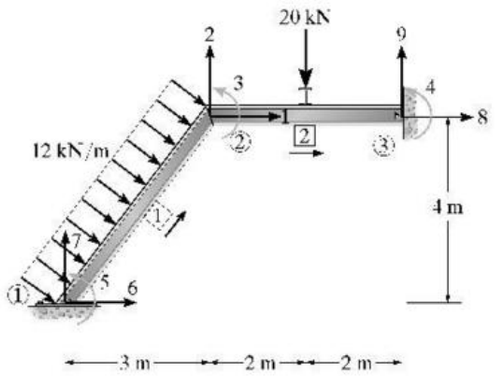

$$\begin{bmatrix} 24\,000 \\ -28\,000 \\ 15\,000 \\ 10\,000 \\ -25\,000 \\ Q_6 - 24\,000 \\ Q_7 - 18\,000 \\ Q_8 \\ Q_9 - 10\,000 \end{bmatrix} = (10^6) \begin{bmatrix} 1292.3 & 380.77 & 13.44 & 0 & 13.44 & -292.3 & -380.77 & -1000 & 0 \\ 380.77 & 527.54 & 16.17 & 26.25 & -10.08 & -380.77 & -514.42 & 0 & -13.125 \\ 13.44 & 16.17 & 126 & 35 & 28 & -13.44 & 10.08 & 0 & -26.25 \\ 0 & 26.25 & 35 & 70 & 0 & 0 & 0 & 0 & -26.25 \\ 13.44 & -10.08 & 28 & 0 & 56 & -13.44 & 10.08 & 0 & 0 \\ -292.3 & -380.77 & -13.44 & 0 & -13.44 & 292.3 & 380.77 & 0 & 0 \\ -380.77 & -514.42 & 10.08 & 0 & 10.08 & 380.77 & 514.42 & 0 & 0 \\ -1000 & 0 & 0 & 0 & 0 & 0 & 0 & 1000 & 0 \\ 0 & -13.125 & -26.25 & -26.25 & 0 & 0 & 0 & 0 & 13.125 \end{bmatrix} \begin{bmatrix} D_1 \\ D_2 \\ D_3 \\ D_4 \\ D_5 \\ 0 \\ 0 \\ 0 \\ 0 \end{bmatrix}$$

$$24(10^{-3}) = 1292.3D_1 + 380.77D_2 + 13.44D_3 + 13.44D_5$$
$$-28(10^{-3}) = 380.77D_1 + 527.54D_2 + 16.17D_3 + 26.25D_4 - 10.08D_5$$
$$15(10^{-3}) = 13.44D_1 + 16.17D_2 + 126D_3 + 35D_4 + 28D_5$$
$$10(10^{-3}) = 26.25D_2 + 35D_3 + 70D_4$$
$$-25(10^{-3}) = 13.44D_1 - 10.08D_2 + 28D_3 + 56D_5$$

$D_1 = 56.50(10^{-6})$ m
$D_2 = -116.06(10^{-6})$ m
$D_3 = 244.01(10^{-6})$ rad
$D_4 = 64.38(10^{-6})$ rad
$D_5 = -602.9(10^{-6})$ rad

$Q_6 + 24\,000 = [-292.3(56.50) - 380.77(-116.06) - 13.44(244.01) + 0 - 13.44(-602.9)]$

$Q_6 = 8.50$ kN **Ans**

$Q_7 - 18\,000 = [-380.77(56.50) - 514.42(-116.06) + 10.08(244.01) + 0 + 10.08(-602.9)]$

$Q_7 = 52.6$ kN **Ans**

$Q_8 = [-1000(56.50) + 0 + 0 + 0 + 0]$

$Q_8 = 56.5$ kN **Ans**

$Q_9 - 1000 = [0 - 13.125(-116.06) - 26.25(244.01) - 26.25(64.38) + 0]$

$Q_9 = 3.43$ kN **Ans**

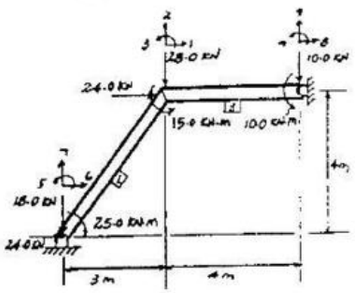

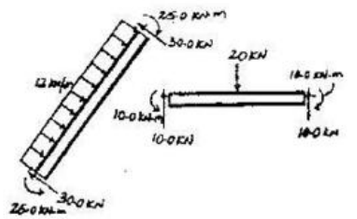

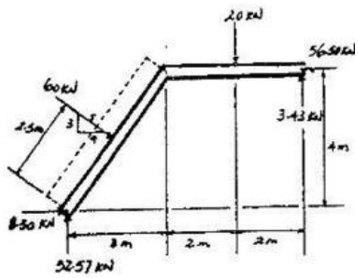

www.e-kitabi.com